UNITED STATES PATENT AND TRADEMARK OFFICE

UNITED STATES DEPARTMENT OF COMMERCE
United States Patent and Trademark Office
Address: COMMISSIONER FOR PATENTS
P.O. Box 1450
Alexandria, Virginia 22313-1450
www.uspto.gov

APPLICATION NO.	FILING DATE	FIRST NAMED INVENTOR	ATTORNEY DOCKET NO.	CONFIRMATION NO.
13/174,179	06/30/2011	Wade Johnson	3729.66US02AE	1432

24113 7590 08/16/2011

PATTERSON THUENTE CHRISTENSEN PEDERSEN, P.A.
4800 IDS CENTER
80 SOUTH 8TH STREET
MINNEAPOLIS, MN 55402-2100

EXAMINER	
DETTINGER, LAURA C	

ART UNIT	PAPER NUMBER
1785	

MAIL DATE	DELIVERY MODE
08/16/2011	PAPER

Please find below and/or attached an Office communication concerning this application or proceeding.

The time period for reply, if any, is set in the attached communication.

UNITED STATES PATENT AND TRADEMARK OFFICE

Commissioner for Patents
United States Patent and Trademark Office
P.O. Box 1450
Alexandria, VA 22313-1450
www.uspto.gov

AUG 16 2011

CST

In re application of
Wade Johnson et al
Serial No. 13/174,179
Filed: June 30, 2011
For: FOILED ARTICLES AND METHODS OF MAKING SAME

DECISION ON PETITION TO MAKE SPECIAL

This is a decision on the petition filed on June 30, 2011 to make the above-identified application special under the accelerated examination program.

The petition to make the application special is **GRANTED.**

The application is eligible for accelerated examination and the petition complies with the conditions for granting the application special status pursuant to the "Change to Practice for Petitions in Patent Applications to Make Special and for Accelerated Examination" published June 26, 2006, in the Federal Register. (71 Fed. Reg. 36323).

The prosecution of the instant application will be conducted expeditiously according to the following guidelines.

1. The application will be docketed to an examiner and taken up for action within two weeks of the date of this decision.

2. Restriction Practice:
If the examiner determines that the claims are not directed to a single invention, a telephone request to elect one single invention will be made pursuant to MPEP 812.01. As a prerequisite to the grant of this petition, the applicant has agreed to make an oral election, by telephone, without traverse. If the applicant refuses to make an election without traverse, or the examiner cannot reach the applicant after a reasonable effort, the examiner will treat the first claimed invention (invention defined by claim 1) as having being constructively elected without traverse for examination.

3. Office action:
   If it is determined that, after appropriate consultation, there is a potential rejection or any other issue to be addressed, the examiner will telephone the applicant and arrange an interview to discuss and resolve the issue. An Office action, other than a Notice of Allowance and Fee(s) Due (Notice of Allowance), will not be issued unless either: 1) an interview was conducted but did not result in agreed to action that places the application in condition for allowance, or, 2) a determination is made that an interview would be unlikely to result in the application being placed in condition for allowance, and 3) an internal conference has been held to review any rejection of any claim.

4. Time for Reply:
   An Office action other than a Notice of Allowance or a final Office action will set a shortened statutory period of one month or thirty days, whichever is longer, for reply with no extension of time available under 37 CFR 1.136(a). Failure to timely file a reply within this non-extendible period for reply will result in the abandonment of the application.

5. Reply by Applicant:
   A timely reply to an Office action other than the Notice of Allowance must be submitted electronically via EFS or EFS-web and limited to addressing the rejections, objections and requirement made. Any amendment that attempts to: 1) add claims which would result in more than three pending independent claims or more than twenty pending total claims; 2) present claims not encompassed by the pre-examination search or an updated accelerated examination support document; or 3) present claims that are directed a non-elected invention or an invention other than that previously claimed and examined in the application, will be treated as not fully responsive and will not be entered.

   For any amendment to the claims (including any new claim) that is not encompassed by the accelerated examination support document, applicant must provide an updated accelerated examination support document that encompasses the amended or new claims at the time of filing of the amendment.

   To proceed expeditiously with the examination, it is recommended that a reply with amendments made to any claim or with any new claim being added be accompanied by an updated accelerated examination support document or a statement explaining how the amended or new claim is supported by the original accelerated examination support document.

6. Information Disclosure Statement (IDS):
   Any IDS filed during prosecution must be submitted electronically via EFS or EFS-web, accompanied by an updated accelerated examination support document, and be in compliance with 37 CFR 1.97 and 1.98.

7. Post-Allowance Processing:
   To expedite processing of the allowed application into a patent, the applicant must: 1) pay the required fees within one month of the date of the Notice of Allowance, and 2) not file any post allowance papers not required by the Office. In no event may the issue fee be paid and accepted later than three months from the date of the Notice of Allowance.

8. After-Final and Appeal Procedures:
   To expedite prosecution, after receiving the final Office action, applicant must: 1) promptly file a notice of appeal, an appeal brief and appeal fees; and 2) not request a pre-appeal brief conference.

   Any amendment, affidavit or other evidence filed after final Office action must comply with applicable rules and the requirements outlined in numbered paragraphs 5 and 6 above.

   On appeal, the application will proceed according to normal appeal procedures. After appeal, the application will again be treated special.

9. Proceedings Outside the Normal Examination Process:
   If the application becomes involved in a proceeding that is outside the normal examination process (e.g., a secrecy order, national security review, interference proceeding, petitions under 37 CFR 1.181, 182 or 183), the application will be treated special before and after such proceeding.

10. Final Disposition:
    The twelve month goal of this accelerated examination procedure ends with a final disposition. The mailing of a final Office action, a Notice of Allowance, the filing of a Notice of Appeal, or the filing of a Request for Continued Examination (RCE) is the final disposition.

If, during prosecution, a paper is not filed electronically using EFS-web, a reply is filed but is not fully responsive, the application is involved in an appeal, or a proceeding outside normal examination process, the application will still be examined expeditiously, however, the final disposition may occur more than twelve months from the filing of the application.

Any inquiry regarding this decision should be directed to Christine Tierney, Quality Assurance Specialist, at (571) 272-1055.

/Christine Tierney/

Christine Tierney
Quality Assurance Specialist
Technology Center 1700

UNITED STATES PATENT AND TRADEMARK OFFICE

UNITED STATES DEPARTMENT OF COMMERCE
United States Patent and Trademark Office
Address: COMMISSIONER FOR PATENTS
P.O. Box 1450
Alexandria, Virginia 22313-1450
www.uspto.gov

APPLICATION NO.	FILING DATE	FIRST NAMED INVENTOR	ATTORNEY DOCKET NO.	CONFIRMATION NO.
13/174,247	06/30/2011	Vyacheslav E. Rusakov	031185-00038	1542

38485 7590 09/28/2011

ARENT FOX LLP
1675 BROADWAY
NEW YORK, NY 10019

EXAMINER	
MOAZZAMI, NASSER G	

ART UNIT	PAPER NUMBER
2436	

NOTIFICATION DATE	DELIVERY MODE
09/28/2011	ELECTRONIC

Please find below and/or attached an Office communication concerning this application or proceeding.

The time period for reply, if any, is set in the attached communication.

Notice of the Office communication was sent electronically on above-indicated "Notification Date" to the following e-mail address(es):

NYIPDocket@arentfox.com
Patent_Mail@arentfox.com

UNITED STATES PATENT AND TRADEMARK OFFICE

COMMISSIONER FOR PATENTS
UNITED STATES PATENT AND TRADEMARK OFFICE
WASHINGTON, DC 20231
www.uspto.gov

Michael Fainberg
Arent Fox LLP
1675 Broadway
New York NY 10019

In re Application of:
Rusakov et al.
Serial No.: 13/174247
Filed: June 30, 2011
Docket: 031185-00038
For: **System and Method for Malware Protection using Virtualization**

DECISION ON PETITION TO MAKE SPECIAL FOR NEW APPLICATION UNDER 37 C.F.R. § 1.102 & M.P.E.P. § 708.02

This is a decision on the petition filed on June 30, 2011 to make the above-identified application special for accelerated examination procedure under 37 C.F.R. § 1.102(d).

The petition to make the application special is **DISMISSED**.

REGULATION AND PRACTICE

A grantable petition to make special under 37 C.F.R. § 1.102(d) and pursuant to the "Change to Practice for Petitions in Patent Applications to Make Special and for Accelerated Examination" published in the Federal Register on June 26, 2006 (71 Fed. Reg. 36323), must satisfy the following conditions:

I. Conditions Regarding the Application:

1. the application must be a non-reissue utility or design application filed under 37 CFR 1.111(a);

2. the application, the petition and the required fees must be filed electronically using the USPTO's electronic filing system (EFS), or EFS-web; if not filed electronically, a statement asserting that EFS and EFS-web were not available during the normal business hours.

3. at the time of filing, the application must be complete under 37 CFR 1.51 and in condition for examination;

4. the application must contain three or fewer independent claims and twenty or fewer total claims and the claims must be directed to a single invention.

II. Conditions Regarding the Petition:

The petition must:

1. be filed with the application;

2. include a statement that applicant agrees not to separately argue the patentability of any independent claim during any appeal in the application;

3. include a statement that applicant agrees to make an election without traverse in a telephone interview.

4. include a statement that applicant agrees to conduct such an interview when requested by the examiner.

5. include a statement, made based on a good faith belief, that a preexamination search in compliance with the following requirements, was conducted, including an identification of the filed of search by United States class and subclass, where applicable, and for database searches, the search logic or chemical structure or sequence used as a query, the name of the file(s) searched and the database service, and the date of the search.

The preexamination search must:

5.1 involve U.S. patents and patent application publications, foreign patent documents, and non-patent literature, unless the applicant can justify with reasonable certainty that no references more pertinent than those already identified are likely to be found in the eliminated sources and includes such a justification with this statement;

5.2. be directed to the claimed invention and encompass all of the features of the claims, giving the claims the broadest reasonable interpretation;

5.3. encompass the disclosed features that may be claimed.

6. must provide in support of the petition an accelerated examination support document.

An accelerated examination support document must include:

6.1. an information disclosure statement (IDS) in compliance with 37 CFR 1.98 citing each reference deemed most closely related to the subject matter of each of the claims;

6.2. an identification of all the limitations in the claims that are disclosed by the reference specifying where the limitation is disclosed in the cited reference;

6.3. a detailed explanation of how each of the claims are patentable over the references cited with particularity required by 37 CFR 1.111(b) and (c);

6.4. a concise statement of the utility of the invention as defined in each of the independent claims (unless the application is a design application);

6.5. a showing of where each limitation of the claims finds support under 35 USC 112, first paragraph, in the written description of the specification. If applicable, the showing must also identify: (1) each means- (or step) plus-function claim element that invokes consideration under 35 UDC 112, sixth paragraph; and (2) the structure, material, or acts in the specification that corresponds to each means- (or step) plus-function claim element that invokes consideration under 35 UDC 112, sixth paragraph; if the application claims the benefit of one or more applications under title 35, United States Code, the showing must also include where each limitation of the claims finds support under 35 USC 112, first paragraph, in each such application in which such supports exists;

6.6. an identification of any cited references that may be disqualified under 35 USC 103(c).

REVIEW OF FACTS

The conditions I 1-4, II 1-4 and II 5.1 and 5.3, II 6.1-6.2, and 6.4-6.6 above are considered to have been met. However, the petition fails to comply with condition II 6.3 above. Therefore, the petition fails to meet the required conditions to be accorded special status under the accelerated examination procedure.

Regarding the requirement of MPEP § 708.02(a)(I.)(H)[1] and items II.5.2 above, the preexamination search does not encompass all of the features of the claims, and does not appear to have given the claims the broadest reasonable interpretation.

Specifically, the text search strategy should be modified to include a reasonable number of synonyms for rules and should be modified to cover the claimed system call in combination with rules and rules synonyms. See below for popular synonyms.

Policy, permissions, and control list

Finally, based upon the claimed subject matter of the instant application, a search in the following class and subclasses is recommended in order to provide full coverage of where the most pertinent references are most likely to be found: **Class 726 Information Security Subclasses 4 and 17** (authorization) for subject matter related to system calls.

This additional search area was confirmed with an examiner in the pertinent art area.

Petitioner should review all claim limitations, especially those asserted as patentable distinctions from the cited references to ensure that the search covers these concepts, and update the search and/or provide any clarifications if deemed necessary

Regarding the requirement of MPEP § 708.02(a)(I.)(3) and items II. 6.3. above, the detailed explanation of how each of the claims are patentable over the references cited with particularity required by 37 CFR 1.111(b) and (c) is improper as the section states that Muttik fails to teach security rules associated with one or more system class but this appears to be taught in the abstract. Additionally, it is alleged that Muttik is different than applicant's invention as Muttik does the analysis in an emulator however the claims fail to recite this feature.

DECISION

For the above-stated reasons, the petition is **dismissed**. The application will therefore be taken up by the examiner for action in its regular turn.

Petitioner is given a single opportunity to perfect the petition. Any request for reconsideration of this decision must be submitted within 1 (one) month or 30 (thirty) days, whichever is longer, (no extension of time under 37 CFR 1.136(a)) from the date of this decision in order to be considered timely. Any request for reconsideration must address the deficiencies indicated above.

Petitioner is reminded that, upon granting of the special status of the application on request for reconsideration, the application will be processed expeditiously. However, due to the dismissal of the instant petition, examination may not be completed within twelve months of the filing date of the application.

A courtesy phone call or email (tod.swann@uspto.gov) stating that a renewed petition has been filed is requested upon refiling of the petition. This will speed up the deciding of the second petition.

Any inquiry regarding this decision should be directed to Tod Swann, Quality Assurance Specialist, at (571) 272-3612. A second point of Contact is Chris Grant at (571)-272-7294.

/Tod Swann/
Tod R Swann, WQAS 2430
Technology Center 2400
Networking, Multiplex, Cable and Information Security

UNITED STATES PATENT AND TRADEMARK OFFICE

UNITED STATES DEPARTMENT OF COMMERCE
United States Patent and Trademark Office
Address: COMMISSIONER FOR PATENTS
P.O. Box 1450
Alexandria, Virginia 22313-1450
www.uspto.gov

APPLICATION NO.	FILING DATE	FIRST NAMED INVENTOR	ATTORNEY DOCKET NO.	CONFIRMATION NO.
13/174,247	06/30/2011	Vyacheslav E. Rusakov	031185-00038	1542

38485 7590 11/09/2011

ARENT FOX LLP
1675 BROADWAY
NEW YORK, NY 10019

EXAMINER	
MOAZZAMI, NASSER G	
ART UNIT	PAPER NUMBER
2436	

NOTIFICATION DATE	DELIVERY MODE
11/09/2011	ELECTRONIC

Please find below and/or attached an Office communication concerning this application or proceeding.

The time period for reply, if any, is set in the attached communication.

Notice of the Office communication was sent electronically on above-indicated "Notification Date" to the following e-mail address(es):

NYIPDocket@arentfox.com
Patent_Mail@arentfox.com

UNITED STATES PATENT AND TRADEMARK OFFICE

COMMISSIONER FOR PATENTS
UNITED STATES PATENT AND TRADEMARK OFFICE
WASHINGTON, DC 20231
www.uspto.gov

Michael Fainberg
Arent Fox LLP
1675 Broadway
New York NY 10019

In re Application of:
Rusakov et al.
Serial No.: 13/174247
Filed: June 30, 2011
Docket: 031185-00038
For: **System and Method for Malware Protection using Virtualization**

DECISION ON PETITION TO MAKE SPECIAL FOR NEW APPLICATION UNDER 37 C.F.R. § 1.102 & M.P.E.P. § . 708.02

This is a decision on the petition re-filed on October 24, 2011 to make the above-identified application special for accelerated examination procedure under 37 C.F.R. § 1.102(d). The original petition was filed on June 30, 2011 and dismissed on September 24 2011.

The petition to make the application special is **GRANTED** as papers filed on October 24, 2011 and filed originally meet the requirements of 37 C.F.R. § 1.102(d) and MPEP 708.02(a)(I) as the search is now encompasses all claim scope and the statement of patentability is proper.

The prosecution of the instant application will be conducted expeditiously according to the following guidelines.

The application will be docketed to an examiner and taken up for action within two weeks of the date of this decision.

1. Restriction Practice:
If the examiner determines that the claims are not directed to a single invention, a telephone request to elect one single invention will be made pursuant to MPEP 812.01. As a prerequisite to the grant of this petition, the applicant has agreed to make an oral election, by telephone, without traverse. If the applicant refuses to make an election without traverse, or the examiner cannot reach the applicant after a reasonable effort, the examiner will treat the first claimed invention (invention defined by claim 1) as having being constructively elected without traverse for examination.

2. Office action:
If it is determined that, after appropriate consultation, there is a potential rejection or any other issue to be addressed, the examiner will telephone the

applicant and arrange an interview to discuss and resolve the issue. An Office action, other than a Notice of Allowance and Fee(s) Due (Notice of Allowance), will not be issued unless either: 1) an interview was conducted but did not result in agreed to action that places the application in condition for allowance, or, 2) a determination is made that an interview would be unlikely to result in the application being placed in condition for allowance, and 3) an internal conference has been held to review any rejection of any claim.

3. Time for Reply:
An Office action other than a Notice of Allowance or a final Office action will set a shortened statutory period of one month or thirty days, whichever is longer, for reply with no extension of time available under 37 CFR 1.136(a). Failure to timely file a reply within this non-extendible period for reply will result in the abandonment of the application.

4. Reply by Applicant:
A timely reply to an Office action other than the Notice of Allowance must be submitted electronically via EFS or EFS-web and limited to addressing the rejections, objections and requirement made. Any amendment that attempts to: 1) add claims which would result in more than three pending independent claims or more than twenty pending total claims; 2) present claims not encompassed by the pre-examination search or an updated accelerated examination support document; or 3) present claims that are directed a non-elected invention or an invention other than that previously claimed and examined in the application, will be treated as not fully responsive and will not be entered.

For any amendment to the claims (including any new claim) that is not encompassed by the accelerated examination support document, applicant must provide an updated accelerated examination support document that encompasses the amended or new claims at the time of filing of the amendment.

To proceed expeditiously with the examination, it is recommended that a reply with amendments made to any claim or with any new claim being added be accompanied by an updated accelerated examination support document or a statement explaining how the amended or new claim is supported by the original accelerated examination support document.

5. Information Disclosure Statement (IDS):
Any IDS filed during prosecution must be submitted electronically via EFS or EFS-web, accompanied by an updated accelerated examination support document, and be in compliance with 37 CFR 1.97 and 1.98.

6. Post-Allowance Processing:
To expedite processing of the allowed application into a patent, the applicant must: 1) pay the required fees within one month of the date of the Notice of Allowance, and 2) not file any post allowance papers not required by the Office. In no event may the issue fee be paid and accepted later than three months from the date of the Notice of Allowance.

7. After-Final and Appeal Procedures:
To expedite prosecution, after receiving the final Office action, applicant must: 1) promptly file a notice of appeal, an appeal brief and appeal fees; and 2) not request a pre-appeal brief conference.

Any amendment, affidavit or other evidence filed after final Office action must comply with applicable rules and the requirements outlined in numbered paragraphs 5 and 6 above.

On appeal, the application will proceed according to normal appeal procedures. After appeal, the application will again be treated special.

8. Proceedings Outside the Normal Examination Process:
If the application becomes involved in a proceeding that is outside the normal examination process (e.g., a secrecy order, national security review, interference proceeding, petitions under 37 CFR 1.181, 182 or 183), the application will be treated special before and after such proceeding.

9. Final Disposition:
The twelve month goal of this accelerated examination procedure ends with a final disposition. The mailing of a final Office action, a Notice of Allowance, the filing of a Notice of Appeal, or the filing of a Request for Continued Examination (RCE) is the final disposition.

If, during prosecution, a paper is not filed electronically using EFS-web, a reply is filed but is not fully responsive, the application is involved in an appeal, or a proceeding outside normal examination process, the application will still be examined expeditiously, however, the final disposition may occur more than twelve months from the filing of the application.

Any inquiry regarding this decision should be directed to Tod Swann, Quality Assurance Specialist, at (571) 272-3612. A second point of Contact is Chris Grant at (571)-272-7294.

/Tod Swann/
Tod R Swann, WQAS 2430
Technology Center 2400

Doc Code: PET.GREEN
Document Description: Petition for Green Tech Pilot

PTO/SB/420 (03-11)

PETITION TO MAKE SPECIAL UNDER THE GREEN TECHNOLOGY PILOT PROGRAM

Attorney Docket Number: 42P38352	Application Number (if known): TBD	Filing date: FILED HEREWITH

First Named Inventor: MARK M. CHANG

Title: TECHNIQUES FOR UTILIZING ENERGY USAGE INFORMATION

APPLICANT HEREBY REQUESTS TO PARTICIPATE IN THE GREEN TECHNOLOGY PILOT PROGRAM FOR THE ABOVE-IDENTIFIED APPLICATION. See Instruction Sheet on page 2.

This petition must be timely filed electronically using the USPTO electronic filing system, EFS-Web.

1. By filing this petition:

   Applicant is requesting early publication: Applicant hereby requests early publication under 37 CFR 1.219 and the publication fee set forth in 37 CFR 1.18(d) accompanies this request.

2. By filing this petition: applicant is agreeing to make an election without traverse in a telephonic interview and elect an invention that meets the eligibility requirements for the Green Technology Pilot Program, if the Office determines that the claims are not obviously directed to a single invention. See Instruction Sheet.

3. This request is accompanied by statements of special status for the eligibility requirement.

4. The application contains no more than three (3) independent claims and twenty (20) total claims.

5. The application does not contain any multiple dependent claims.

6. Other attachments: _____

Signature /Paul A. Mendonsa/	Date 6/30/11
Name (Print/Typed) Paul A. Mendonsa	Registration Number 42879

Note: *Signatures of all the inventors or assignees of record of the entire interest or their representative(s) are required in accordance with 37 CFR 1.33 and 11.18. Please see 37 CFR 1.4(d) for the form of the signature. If necessary, submit multiple forms for more than one signature, see below*.*

☐ *Total of _____ forms are submitted.

If you need assistance in completing the form, call 1-800-PTO-9199 and select option 2.

Instruction Sheet for
Petition to Make Special Under the Green Technology Pilot Program

(Not to be Submitted to the USPTO)

The following is a summary of the requirements (for more information see the notices (i) "Pilot Program for Green Technologies Including Greenhouse Gas Reduction," (ii) "Elimination of Classification Requirement in the Green Technology Pilot Program," and (iii) "Expansion and Extension of the Green Technology Pilot Program," available on the USPTO web site at http://www.uspto.gov/patents/init_events/green_tech.jsp):

(1) The application must be a non-reissue, non-provisional utility application filed under 35 U.S.C. 111(a), or an international application that has entered the national stage in compliance with 35 U.S.C. 371, irrespective of the filing date of the application. Reexamination proceedings are excluded from this pilot program.

(2) The application must contain three or fewer independent claims and twenty or fewer total claims. The application must not contain any multiple dependent claims. For an application that contains more than three independent claims or twenty total claims, or multiple dependent claims, applicant must file a preliminary amendment in compliance with 37 CFR 1.121 to cancel the excess claims and/or the multiple dependent claims at the time the petition to make special is filed.

(3) The claims must be directed to a single invention that materially enhances the quality of the environment, or that materially contributes to: (1) the discovery or development of renewable energy resources; (2) the more efficient utilization and conservation of energy resources; or (3) green house gas emission reduction (see the eligibility requirements of sections II and III of the notice (i) cited above). The petition must include a statement that, if the USPTO determines that the claims are directed to multiple inventions (e.g., in a restriction requirement), applicant will agree to make an election without traverse in a telephonic interview, and elect an invention that meets the eligibility requirements in section II or III of the notice (i) cited above.

(4) The petition to make special must be timely filed electronically using the USPTO electronic filing system, EFS-Web, and selecting the document description of "Petition for Green Tech Pilot" on the EFS-Web screen. Applicant should use form PTO/SB/420, which is available as a Portable Document Format (PDF) fillable form in EFS-Web and on the USPTO Web site.

(5) The petition to make special must be filed at least one day prior to the date that a first Office action (which may be an Office action containing only a restriction requirement) appears in the Patent Application Information Retrieval (PAIR) system. Applicant may check the status of the application using PAIR.

(6) The petition to make special must be accompanied by a request for early publication in compliance with 37 CFR 1.219 and the publication fee set forth in 37 CFR 1.18(d).

Privacy Act Statement

The **Privacy Act of 1974 (P.L. 93-579)** requires that you be given certain information in connection with your submission of the attached form related to a patent application or patent. Accordingly, pursuant to the requirements of the Act, please be advised that: (1) the general authority for the collection of this information is 35 U.S.C. 2(b)(2); (2) furnishing of the information solicited is voluntary; and (3) the principal purpose for which the information is used by the U.S. Patent and Trademark Office is to process and/or examine your submission related to a patent application or patent. If you do not furnish the requested information, the U.S. Patent and Trademark Office may not be able to process and/or examine your submission, which may result in termination of proceedings or abandonment of the application or expiration of the patent.

The information provided by you in this form will be subject to the following routine uses:

1. The information on this form will be treated confidentially to the extent allowed under the Freedom of Information Act (5 U.S.C. 552) and the Privacy Act (5 U.S.C 552a). Records from this system of records may be disclosed to the Department of Justice to determine whether disclosure of these records is required by the Freedom of Information Act.
2. A record from this system of records may be disclosed, as a routine use, in the course of presenting evidence to a court, magistrate, or administrative tribunal, including disclosures to opposing counsel in the course of settlement negotiations.
3. A record in this system of records may be disclosed, as a routine use, to a Member of Congress submitting a request involving an individual, to whom the record pertains, when the individual has requested assistance from the Member with respect to the subject matter of the record.
4. A record in this system of records may be disclosed, as a routine use, to a contractor of the Agency having need for the information in order to perform a contract. Recipients of information shall be required to comply with the requirements of the Privacy Act of 1974, as amended, pursuant to 5 U.S.C. 552a(m).
5. A record related to an International Application filed under the Patent Cooperation Treaty in this system of records may be disclosed, as a routine use, to the International Bureau of the World Intellectual Property Organization, pursuant to the Patent Cooperation Treaty.
6. A record in this system of records may be disclosed, as a routine use, to another federal agency for purposes of National Security review (35 U.S.C. 181) and for review pursuant to the Atomic Energy Act (42 U.S.C. 218(c)).
7. A record from this system of records may be disclosed, as a routine use, to the Administrator, General Services, or his/her designee, during an inspection of records conducted by GSA as part of that agency's responsibility to recommend improvements in records management practices and programs, under authority of 44 U.S.C. 2904 and 2906. Such disclosure shall be made in accordance with the GSA regulations governing inspection of records for this purpose, and any other relevant (*i.e.*, GSA or Commerce) directive. Such disclosure shall not be used to make determinations about individuals.
8. A record from this system of records may be disclosed, as a routine use, to the public after either publication of the application pursuant to 35 U.S.C. 122(b) or issuance of a patent pursuant to 35 U.S.C. 151. Further, a record may be disclosed, subject to the limitations of 37 CFR 1.14, as a routine use, to the public if the record was filed in an application which became abandoned or in which the proceedings were terminated and which application is referenced by either a published application, an application open to public inspection or an issued patent.
9. A record from this system of records may be disclosed, as a routine use, to a Federal, State, or local law enforcement agency, if the USPTO becomes aware of a violation or potential violation of law or regulation.

Attorney Docket No.: 42P38352 Patent

IN THE UNITED STATES PATENT AND TRADEMARK OFFICE

In re Application of:	
Mark M. Chang	Examiner: TBD
Application No.: TBD	Art Unit: TBD
Filed: TBD	
For: Techniques for Utilizing Energy Usage Information	

Commissioner for Patents
P.O. Box 1450
Alexandria, VA 22313-1450

STATEMENT OF SPECIAL STATUS

Dear Sir/Mdm:

Applicants respectfully submit that the above-identified application is eligible for the Green Technology Pilot Program in that the described subject matter materially contributes to the more efficient utilization and conservation of energy resources.

In this regard, the application describes a method and system for determining an energy-efficient operating point of a platform. The platform has logic to provide feedback to a user of a platform to enable the user to more efficiently and intelligently manage his/her energy consumption.

It is respectfully submitted that the above petition should be granted and the above application should be accorded special status under the Green Technology Pilot Program.

Respectfully submitted,

BLAKELY, SOKOLOFF, TAYLOR & ZAFMAN LLP

Date: June 30, 2011

/Paul A. Mendonsa/
Paul A. Mendonsa
Reg. No. 42,879

1279 Oakmead Parkway
Sunnyvale, CA 94085-4040
(503) 439-8778

UNITED STATES PATENT AND TRADEMARK OFFICE

UNITED STATES DEPARTMENT OF COMMERCE
United States Patent and Trademark Office
Address: COMMISSIONER FOR PATENTS
P.O. Box 1450
Alexandria, Virginia 22313-1450
www.uspto.gov

APPLICATION NO.	FILING DATE	FIRST NAMED INVENTOR	ATTORNEY DOCKET NO.	CONFIRMATION NO.
13/174,338	06/30/2011	MARK M. CHANG	42P38352	1679

45209 7590 09/21/2011

MISSION/BSTZ
BLAKELY SOKOLOFF TAYLOR & ZAFMAN LLP
1279 OAKMEAD PARKWAY
SUNNYVALE, CA 94085-4040

EXAMINER	
ART UNIT	PAPER NUMBER
3744	

MAIL DATE	DELIVERY MODE
09/21/2011	PAPER

Please find below and/or attached an Office communication concerning this application or proceeding.

The time period for reply, if any, is set in the attached communication.

UNITED STATES PATENT AND TRADEMARK OFFICE

Commissioner for Patents
United States Patent and Trademark Office
P.O. Box 1450
Alexandria, VA 22313-1450
www.uspto.gov

MISSION/BSTZ
BLAKELY SOKOLOFF TAYLOR & ZAFMAN
LLP
1279 OAKMEAD PARKWAY
SUNNYVALE CA 94085-4040

In re Application of		
CHANG, MARK M. et al	:	DECISION ON PETITION
Application No. 13/174,338	:	TO MAKE SPECIAL UNDER
Filed: Jun. 30, 2011	:	THE GREEN TECHNOLOGY
Attorney Docket No. 42P38352	:	PILOT PROGRAM

This is a decision on the petition under 37 CFR 1.102, filed June 30, 2011, to make the above-identified application special under the pilot program for applications pertaining to Green Technologies as set forth in 74 Federal Register Notice 64666 (December 8, 2009) and amended by 75 Federal Register Notice 28554 (May 21, 2010) and 75 Federal Register Notice 69049 (November 10, 2010).

The petition is **dismissed**.

A grantable petition to make an application special under 37 CFR 1.102 and the pilot program as set forth in 74 FR 64666 must be directed to a nonprovisional application filed under 35 USC 111(a) or be a national stage entry under 35 USC 371, exclusive of any reissue applications.

If reconsideration of this decision is desired, a petition for reconsideration must be filed within ONE (1) MONTH OR THIRTY (30) DAYS from the mail date of this decision, whichever is longer. No extension of this time limit can be granted under 37 CFR 1.136(a) or (b). The petition for reconsideration should include an exhaustive attempt to provide the lacking item(s) noted below, since, after a decision on the petition for reconsideration, no further reconsideration or review of the matter will be undertaken by the Director.

In order to qualify for special status, the following requirements must be met. 1) The application must have no more than 3 independent claims and no more than 20 total claims. 2) The application must not contain any multiple dependent claims. 3) The petition must state the basis for seeking special status, i.e., the claimed invention either: A) materially enhances the quality of the environment or B) materially contributes to: i) the discovery or development of renewable energy resources, ii) the more efficient utilization and conservation of energy resources, or iii) greenhouse gas emission reduction. 4) If the disclosure is not clear on its face that the claimed invention materially contributes under category (A) or (B), the petition must be accompanied by a statement by the applicant, assignee, or an attorney/agent registered to practice before the

Office explaining how the materiality standard is met. 5) A statement that applicant will agree to make an election without traverse in a telephonic interview if a restriction requirement is made by the examiner. 6) The petition to make special must be filed electronically. 7) The petition must be filed at least one day prior to the date that a first Office Action appears in the Patent Application Information Retrieval (PAIR) system. 8) The petition must be accompanied by a request for early publication in compliance with 37 CFR 1.219 and include the publication fee as set forth in 37 CFR 1.18(d).

The requirement for a fee for consideration of the petition to make special for applications pertaining to Green Technologies has been waived. The petition lacks item # 4.

In regard to item 4, petitioner should note that the instant petition includes a statement identifying the basis for the special status (i.e., whether the instant invention (1) materially enhances the quality of the environment or materially contributes to (2) development of renewable energy resources or energy conservation, or (3) greenhouse gas reduction) as required by sections II and III of the notice. However, as stated in the notice, applicant must also provide a statement pertaining to the materiality standard if the application disclosure is not clear on its face as to the materiality of the basis for the special status of the invention. This petition lacks such a statement and it is not agreed that the application on its face meets that materiality standard. Petitioner states that the claimed invention relates to green technologies. This is not convincing. For example, it is not clear how the claimed computer floppy disk with software instructions in claims 9-16 will provide and enhance the quality of the environment or contribute to development of renewable energy resources or energy conservation or greenhouse gas reduction. It is also not clear the claimed energy monitoring process in claims 1-8 will provide and enhance the quality of the environment or contribute to development of renewable energy resources or energy conservation or greenhouse gas reduction. The claims have nothing to do with the green technology which will provide and enhance the quality of the environment or contribute to development of renewable energy resources or energy conservation or greenhouse gas reduction.

Any reconsideration of this decision should be submitted through the USPTO electronic filing system, EFS-Web, and selecting the document description of "Petition for Green Tech Pilot" on the EFS-Web screen.

Telephone inquiries concerning this decision should be directed to Henry C. Yuen at 571-272-4856.

The application will be forwarded to the Technology Center Art Unit 3747 for action in its regular turn.

/Henry C. Yuen/

Henry C. Yuen
Quality Assurance Specialist
Technology Center 3700

Doc code : PET.OP.AGE
Description : Petition to make special based on Age/Health

PTO/SB/130 (07-09)
Approved for use through 07/31/2012. OMB 0651- 0031
U.S. Patent and Trademark Office; U.S. DEPARTMENT OF COMMERCE
Under the Paperwork Reduction Act of 1995, no persons are required to respond to a collection of information unless it contains a valid OMB control number

PETITION TO MAKE SPECIAL BASED ON AGE FOR ADVANCEMENT OF EXAMINATION UNDER 37 CFR 1.102(c)(1)

Application Information

Application Number	13/174,339	Confirmation Number	1680	Filing Date	2011-06-30
Attorney Docket Number (optional)	BILC-001CIP	Art Unit	2821	Examiner	Unassigned
First Named Inventor	Maxik, Fredric S.				
Title of Invention	LED Lamp for Producing Biologically-Corrected Light				

Attention: Office of Petitions
An application may be made special for advancement of examination upon filing of a petition showing that the applicant is 65 years of age, or more. No fee is required with such a petition. See 37 CFR 1.102(c)(1) and MPEP 708.02 (IV).

APPLICANT HEREBY PETITIONS TO MAKE SPECIAL FOR ADVANCEMENT OF EXAMINATION IN THIS APPLICATION UNDER 37 CFR 1.102(c)(1) and MPEP 708.02 (IV) ON THE BASIS OF THE APPLICANT'S AGE.

A grantable petition requires one of the following items:
(1) Statement by one named inventor in the application that he/she is 65 years of age, or more; or
(2) Certification by a registered attorney/agent having evidence such as a birth certificate, passport, driver's license, etc. showing one named inventor in the application is 65 years of age, or more.

Name of Inventor who is 65 years of age, or older

Given Name	Middle Name	Family Name	Suffix
David	E.	Bartine	

A signature of the applicant or representative is required in accordance with 37 CFR 1.33 and 10.18. Please see 37 CFR 1.4(d) for the format of the signature.

Select (1) or (2) :

○ (1) I am an inventor in this application and I am 65 years of age, or more.

● (2) I am an attorney or agent registered to practice before the Patent and Trademark Office, and I certify that I am in possession of evidence, and will retain such in the application file record, showing that the inventor listed above is 65 years of age, or more.

Signature	/Peter A. Socarras, Reg. No. 54457/	Date (YYYY-MM-DD)	2012-02-02
Name	Peter A. Socarras	Registration Number	54457

PTO/SB/130 (07-09)
Approved for use through 07/31/2012. OMB 0651- 0031
U.S. Patent and Trademark Office; U.S. DEPARTMENT OF COMMERCE
Under the Paperwork Reduction Act of 1995, no persons are required to respond to a collection of information unless it contains a valid OMB control number

Privacy Act Statement

The Privacy Act of 1974 (P.L. 93-579) requires that you be given certain information in connection with your submission of the attached form related to a patent application or patent. Accordingly, pursuant to the requirements of the Act, please be advised that: (1) the general authority for the collection of this information is 35 U.S.C. 2(b)(2); (2) furnishing of the information solicited is voluntary; and (3) the principal purpose for which the information is used by the U.S. Patent and Trademark Office is to process and/or examine your submission related to a patent application or patent. If you do not furnish the requested information, the U.S. Patent and Trademark Office may not be able to process and/or examine your submission, which may result in termination of proceedings or abandonment of the application or expiration of the patent.

The information provided by you in this form will be subject to the following routine uses:

1. The information on this form will be treated confidentially to the extent allowed under the Freedom of Information Act (5 U.S.C. 552) and the Privacy Act (5 U.S.C. 552a). Records from this system of records may be disclosed to the Department of Justice to determine whether the Fr eedom of Information Act requires disclosure of these records.

2. A record from this system of records may be disclosed, as a routine use, in the course of presenting evidence to a court, magistrate, or administrative tribunal, including disclosures to opposing counsel in the course of settlement negotiations.

3. A record in this system of records may be disclosed, as a routine use, to a Member of Congress submitting a request involving an individual, to whom the record pertains, when the individual has requested assistance from the Member with respect to the subject matter of the record.

4. A record in this system of records may be disclosed, as a routine use, to a contractor of the Agency having need for the information in order to perform a contract. Recipients of information shall be required to comply with the requirements of the Privacy Act of 1974, as amended, pursuant to 5 U.S.C. 552a(m).

5. A record related to an International Application filed under the Patent Cooperation Treaty in this system of records may be disclosed, as a routine use, to the International Bureau of the World Intellectual Property Organization, pursuant to the Patent Cooperation Treaty.

6. A record in this system of records may be disclosed, as a routine use, to another federal agency for purposes of National Security review (35 U.S.C. 181) and for review pursuant to the Atomic Energy Act (42 U.S.C. 218(c)).

7. A record from this system of records may be disclosed, as a routine use, to the Administrator, General Services, or his/her designee, during an inspection of records conducted by GSA as part of that agency's responsibility to recommend improvements in records management practices and programs, under authority of 44 U.S.C. 2904 and 2906. Such disclosure shall be made in accordance with the GSA regulations governing inspection of records for this purpose, and any other relevant (i.e., GSA or Commerce) directive. Such disclosure shall not be used to make determinations about indivi duals.

8. A record from this system of records may be disclosed, as a routine use, to the public after either publication of the application pursuant to 35 U.S.C. 122(b) or issuance of a patent pursuant to 35 U.S.C. 151. Further, a record may be disclosed, subject to the limitations of 37 CFR 1.14, as a routine use, to the public if the record was filed in an application which became abandoned or in which the proceedings were terminated and which application is referenced by either a published application, an application open to public inspections or an issued patent.

9. A record from this system of records may be disclosed, as a routine use, to a Federal, State, or local law enforcement agency, if the USPTO becomes aware of a violation or potential violation of law or regulation.

UNITED STATES PATENT AND TRADEMARK OFFICE

Commissioner for Patents
United States Patent and Trademark Office
P.O. Box 1450
Alexandria, VA 22313-1450
www.uspto.gov

In re Application of
Fredric S. Maxik

Application No. 13174339

Filed: June 30,2011

Attorney Docket No. BILC-001CIP

:
:
:DECISION ON PETITION TO MAKE SPECIAL
:UNDER 37 CFR 1.102(c)(1)
:

This is a decision on the electronic petition under 37 CFR 1.102 (c)(1), filed 02-FEB-2012 to make the above-identified application special based on applicant's age as set forth in MPEP § 708.02, Section IV.

The petition is **GRANTED**.

A grantable petition to make an application special under 37 CFR 1.102(c)(1), MPEP § 708.02, Section IV: Applicant's Age must include a statement by applicant or a registered practitioner having evidence that applicant is at least 65 years of age. No fee is required.

Accordingly, the above-identified application has been accorded "special" status and will be taken up for action by the examiner upon the completion of all pre-examination processing.

Telephone inquiries concerning this electronic decision should be directed to the Electronic Business Center at 866-217-9197.

All other inquiries concerning either the examination or status of the application should be directed to the Technology Center.

UNITED STATES PATENT AND TRADEMARK OFFICE

Commissioner for Patents
United States Patent and Trademark Office
P.O. Box 1450
Alexandria, VA 22313-1450
www.uspto.gov

HUAWEI/BHGL
P.O. BOX 10395
CHICAGO IL 60610

MAILED

APR 09 2012

OFFICE OF PETITIONS

In re Application of
Lun LIAN
Application No.: 13/174,409
Filed: June 30, 2011
Attorney Docket No.: 13674-533
For: METHOD, APPARATUS AND SYSTEM FOR TRANSMITTING SIGNAL

: DECISION ON REQUEST TO
: PARTICIPATE IN THE PATENT
: PROSECUTION HIGHWAY
: PROGRAM AND PETITION
: TO MAKE SPECIAL UNDER
: 37 CFR 1.102(a)

This is a decision on the renewed request to participate in the Patent Prosecution Highway (PPH) pilot program and the petition under 37 CFR 1.102(a), filed January 27, 2012, to make the above-identified application special.

The request and petition are **GRANTED**.

Discussion

A grantable request to participate in the PPH pilot program and petition to make special require:

1. The U.S. application is

    a. a Paris Convention application which either
        i. validly claims priority under 35 U.S.C. 119(a) and 37 CFR 1.55 to one or more applications filed in the SIPO, or
        ii. validly claims priority to a PCT application that contains no priority claims, or
    b. a national stage application under the PCT (an application which entered the national stage in the U.S. from a PCT international application after compliance with 35 U.S.C. 371), which PCT application
        i. validly claims priority to an application filed in the SIPO, or
        ii. validly claims priority under 35 U.S.C 365 (b) to a PCT application that contains no priority claims, or
        iii. contains no priority claim, or
    c. a so-called bypass application filed under 35 U.S.C. 111(a) which validly claims benefit under 35 U.S.C. 120 to a PCT application, which PCT application
        i. validly claims priority under 35 U.S.C 365 (b) to an application filed in the SIPO, or

ii. validly claims priority under 35 U.S.C 365 (b) to a PCT application that contains no priority claims, or
iii. contains no priority claim;

2. Applicant must submit a copy of:
   a. The allowable/patentable claim(s) from the SIPO application(s);
   b. An English translation of the allowable/patentable claim(s) if not in English and
   c. A statement that the English translation is accurate;
3. Applicant must:
   a. Ensure all the claims in the U.S. application must sufficiently correspond or be amended to sufficiently correspond to the allowable/patentable claim(s) in the SIPO application(s) and
   b. Submit a claims correspondence table in English;
4. Examination of the U.S. application has not begun;
5. Applicant must submit:
   a. a copy: the all office action(s) from of each of the SIPO application(s) containing the allowable/patentable claim(s)
   b. An English language translation of the SIPO Office action if not in English
   c. A statement that the English translation is accurate;
6. Applicant must submit:
   a. An IDS listing the documents cited by the SIPO examiner in the SIPO office action(s) (unless already submitted in this application)
   b. Copies of the documents except U.S. patents or U.S. patent application publications (unless already submitted in this application);

The request to participate in the PPH pilot program and petition comply with the above requirements. Accordingly, the above-identified application has been accorded "special" status.

Inquiries concerning this decision should be directed to Michelle R. Eason at 571-272-4231.

All other inquiries concerning the examination or status of the application is accessible in the PAIR system at http://www.uspto.gov/ebc.index.html.

This application will be forwarded to the examiner for action on the merits commensurate with this decision.

Thurman K. Page
Petitions Examiner
Office of Petitions

Doc Code: PET.GREEN
Document Description: Petition for Green Tech Pilot

PTO/SB/420 (11-10)
Approved for use through 01/31/2011. OMB 0651-0062
U.S. Patent and Trademark Office; U. S. DEPARTMENT OF COMMERCE
Under the Paperwork Reduction Act of 1995, no persons are required to respond to a collection of information unless it displays a valid OMB control number.

PETITION TO MAKE SPECIAL UNDER THE GREEN TECHNOLOGY PILOT PROGRAM

Attorney Docket Number: 83190322	Application Number (if known): 13/174,419	Filing date: June 30, 2011
First Named Inventor: Eric Kurtz		
Title: METHOD FOR CONTROLLING FUEL INJECTION FOR A DUAL FUEL ENGINE		

APPLICANT HEREBY REQUESTS TO PARTICIPATE IN THE GREEN TECHNOLOGY PILOT PROGRAM FOR THE ABOVE-IDENTIFIED APPLICATION. See Instruction Sheet on page 2.

This petition must be timely filed electronically using the USPTO electronic filing system, EFS-Web.

1. By filing this petition:

   Applicant is requesting early publication: Applicant hereby requests early publication under 37 CFR 1.219 and the publication fee set forth in 37 CFR 1.18(d) accompanies this request.

2. By filing this petition: applicant is agreeing to make an election without traverse in a telephonic interview and elect an invention that meets the eligibility requirements for the Green Technology Pilot Program, if the Office determines that the claims are not obviously directed to a single invention. See Instruction Sheet.

3. This request is accompanied by statements of special status for the eligibility requirement.

4. The application contains no more than three (3) independent claims and twenty (20) total claims.

5. The application does not contain any multiple dependent claims.

6. Other attachments: _____

Signature /John D. Russell/	Date July 26, 2011
Name (Print/Typed) John D. Russell	Registration Number 47,048

Note: *Signatures of all the inventors or assignees of record of the entire interest or their representative(s) are required in accordance with 37 CFR 1.33 and 11.18. Please see 37 CFR 1.4(d) for the form of the signature. If necessary, submit multiple forms for more than one signature, see below*.*

[X] *Total of 1 forms are submitted.

The information is required to obtain or retain a benefit by the public which is to file (and by the USPTO to process) an application. Confidentiality is governed by 35 U.S.C. 122 and 37 CFR 1.11 and 1.14. This collection is estimated to take 12 hours to complete, including gathering, preparing, and submitting the completed application form to the USPTO. Time will vary depending upon the individual case. Any comments on the amount of time you require to complete this form and/or suggestions for reducing this burden, should be sent to the Chief Information Officer, U.S. Patent and Trademark Office, U.S. Department of Commerce, P.O. Box 1450, Alexandria, VA 22313-1450. DO NOT SEND FEES OR COMPLETED FORMS TO THIS ADDRESS. **SEND TO: Commissioner for Patents, P.O. Box 1450, Alexandria, VA 22313-1450.**

If you need assistance in completing the form, call 1-800-PTO-9199 and select option 2.

IN THE UNITED STATES PATENT AND TRADEMARK OFFICE

Applicants	:	Eric Kurtz
Application No.	:	13/174,419
Filed	:	June 30, 2011
Title	:	METHOD FOR CONTROLLING FUEL INJECTION FOR A DUAL FUEL ENGINE
Group Art Unit	:	3747
Confirmation No.	:	1818
Docket No.	:	83190322

Commissioner for Patents
P.O. Box 1450
Alexandria, VA 22313-1450

CERTIFICATE OF TRANSMISSION

I hereby certify that this correspondence is being transmitted via the U.S. Patent and Trademark Office electronic filing system (EFS-Web) to the USPTO on:

July 26, 2011	/Angie C. Farr/
Date	Angie C. Farr

STATEMENTS OF SPECIAL STATUS

Applicants respectfully request consideration of the following statement concerning the basis for the special status as well as the following statement pertaining to the materiality standard.

I. Statement concerning the basis for special status.

Applicants submit that special status is sought on the following basis: the claimed invention materially enhances the quality of the environment.

II. Statement pertaining to the materiality standard.

As a preliminary matter, Applicants note that the following statement refers explicitly to the elements of independent claim 1, which is the broadest claim in many respects.

Regarding basis (1), Applicants submit that the claimed invention materially enhances the quality of the environment by improving vehicle emissions, which negatively impact the quality of the environment. Specifically, the claimed invention improves engine emissions during transient conditions in a reactivity controlled compression ignition (RCCI) engine. As explained in the Background and Summary of

the subject application, RCCI utilizes two fuels with different reactivities and multiple fuel injections to control air-fuel mixture reactivity in engine cylinders. Further, one of the fuels has a lower reactivity as compared to the other fuel. A homogenous charge comprising the low reactivity fuel, exhaust gas recirculation (EGR), and air is formed in an engine cylinder. As a piston in the cylinder compresses the homogenous mixture, the higher reactivity fuel may be injected at a time before ignition of the homogenous mixture is ignited. Combustion of the air-fuel mixture may be controlled in this way to reduce NOx and particulate matter while improving engine fuel economy. However, changes in the in cylinder oxygen concentration and/or boost related to transient engine operating conditions can affect the composition of cylinder charge mixture and degrade combustion, leading to increased emissions.

The claimed invention addresses the above issues by providing a method for adjusting the relative amounts of various reactivity fuels during transient conditions. For example, claim 1 recites:

> An engine operating method, comprising:
> increasing an amount of a first fuel with a first reactivity injected to a cylinder during a transition greater than a threshold in response to an engine intake oxygen concentration error;
> decreasing an amount of a second fuel with a second reactivity injected to the cylinder during the transition in response to the engine intake oxygen concentration error; and
> compression igniting the first and second fuels in the cylinder.

By adjusting amounts of fuels having different reactivity rates injected to a cylinder during transient conditions in response to an engine air intake oxygen concentration error, it may be possible to improve transient engine emissions while at the same time providing a desired engine torque amount. For example, an engine air intake oxygen concentration can be controlled during steady state operating conditions so that NOx and particulate matter may be reduced. However, during transient conditions, the engine air intake oxygen concentration may be in error as compared to the desired engine air intake oxygen concentration. The engine air intake oxygen concentration error may be compensated via increasing an amount of a first fuel with a first reactivity injected into the cylinder during a cylinder cycle and decreasing an amount of a second fuel injected

into the cylinder during the cylinder cycle. In this way, engine emissions during transient engine operating conditions may be reduced, enhancing the quality of the environment.

Please charge any cost incurred in this filing, along with any other costs, to Deposit Account No. 06-1510.

Respectfully submitted,

ALLEMAN HALL MCCOY RUSSELL & TUTTLE LLP

/John D. Russell/
John D. Russell
Registration No. 47,048
Customer No. 36865
Attorney/Agent for Applicants/Assignee
806 S.W. Broadway, Suite 600
Portland, Oregon 97205
Telephone: (503) 459-4141
Facsimile: (503) 459-4142

UNITED STATES PATENT AND TRADEMARK OFFICE

UNITED STATES DEPARTMENT OF COMMERCE
United States Patent and Trademark Office
Address: COMMISSIONER FOR PATENTS
P.O. Box 1450
Alexandria, Virginia 22313-1450
www.uspto.gov

APPLICATION NO.	FILING DATE	FIRST NAMED INVENTOR	ATTORNEY DOCKET NO.	CONFIRMATION NO.
13/174,419	06/30/2011	Eric Kurtz	83190322	1818

36865 7590 08/10/2011

ALLEMAN HALL MCCOY RUSSELL & TUTTLE, LLP
806 S.W. BROADWAY, SUITE 600
PORTLAND, OR 97205

EXAMINER	
ART UNIT	PAPER NUMBER
3747	

MAIL DATE	DELIVERY MODE
08/10/2011	PAPER

Please find below and/or attached an Office communication concerning this application or proceeding.

The time period for reply, if any, is set in the attached communication.

UNITED STATES PATENT AND TRADEMARK OFFICE

Commissioner for Patents
United States Patent and Trademark Office
P.O. Box 1450
Alexandria, VA 22313-1450
www.uspto.gov

ALLEMAN HALL MCCOY RUSSELL & TUTTLE, LLP
806 S.W. BROADWAY, SUITE 600
PORTLAND OR 97205

In re Application of	:	
KURTZ, ERIC	:	DECISION ON PETITION
Application No. 13/174,419	:	TO MAKE SPECIAL UNDER
Filed: 06/30/2011	:	THE GREEN TECHNOLOGY
Attorney Docket No. 83190322	:	PILOT PROGRAM

This is a decision on the renewed petition under 37 CFR 1.102, filed July 26, 2011 to make the above-identified application special under the pilot program for applications pertaining to Green Technologies as set forth in 74 Federal Register Notice 64666 (December 8, 2009) and amended by 75 Federal Register Notice 28554 (May 21, 2010) and 75 Federal Register Notice 69049 (November 10, 2010).

The petition is **granted.**

A grantable petition to make an application special under 37 CFR 1.102 and the pilot program as set forth in 74 FR 64666 must be directed to a nonprovisional application filed under 35 USC 111(a) or be a national stage entry under 35 USC 371, exclusive of any reissue applications.

In order to qualify for special status, the following requirements must be met. 1) The application must have no more than 3 independent claims and no more than 20 total claims. 2) The application must not contain any multiple dependent claims. 3) The petition must state the basis for seeking special status, i.e., the claimed invention either: A) materially enhances the quality of the environment or B) materially contributes to: i) the discovery or development of renewable energy resources, ii) the more efficient utilization and conservation of energy resources, or iii) greenhouse gas emission reduction. 4) If the disclosure is not clear on its face that the claimed invention materially contributes under category (A) or (B), the petition must be accompanied by a statement by the applicant, assignee, or an attorney/agent registered to practice before the Office explaining how the materiality standard is met. 5) A statement that applicant will agree to make an election without traverse in a telephonic interview if a restriction requirement is made by the examiner. 6) The petition to make special must be filed electronically. 7) The petition must be filed at least one day prior to the date that a first Office Action appears in the Patent Application Information Retrieval (PAIR) system. 8) The petition must be accompanied by a request for early publication in compliance with 37 CFR 1.219 and include the publication fee as set forth in 37 CFR 1.18(d).

The requirement for a fee for consideration of the petition to make special for applications pertaining to Green Technologies has been waived.

The instant petition complies with items 1 – 8 above. Accordingly, the above-identified application has been accorded "special" status.

Telephone inquires concerning this decision should be directed to Henry C. Yuen at 571-272-4856.

This application will be forwarded to the Technology Center Art Unit 3747 for action on the merits commensurate with this decision.

/Henry C. Yuen/

Henry C. Yuen
Quality Assurance Specialist
Technology Center TC 3700

Doc Code: PET.GREEN
Document Description: Petition for Green Tech Pilot

PTO/SB/420 (05-10)
Approved for use through 05/31/2010. OMB 0651-0062
U.S. Patent and Trademark Office; U. S. DEPARTMENT OF COMMERCE
Under the Paperwork Reduction Act of 1995, no persons are required to respond to a collection of information unless it displays a valid OMB control number.

PETITION TO MAKE SPECIAL UNDER THE GREEN TECHNOLOGY PILOT PROGRAM

Attorney Docket Number: 2832-0634PUS1	Application Number (if known): 13/174,445	Filing date: June 30, 2011
First Named Inventor: Jeonghun SON		
Title: THIN FILM SOLAR CELL MODULE AND FABRICATING METHOD THEREOF		

APPLICANT HEREBY REQUESTS TO PARTICIPATE IN THE GREEN TECHNOLOGY PILOT PROGRAM FOR THE ABOVE-IDENTIFIED APPLICATION. See Instruction Sheet on page 2.

This petition must be timely filed electronically using the USPTO electronic filing system, EFS-Web.

1. By filing this petition:

   Applicant is requesting early publication: Applicant hereby requests early publication under 37 CFR 1.219 and the publication fee set forth in 37 CFR 1.18(d) accompanies this request.

2. By filing this petition: applicant is agreeing to make an election without traverse in a telephonic interview and elect an invention that meets the eligibility requirements set forth in the notice titled "Pilot Program for Green Technologies Including Greenhouse Gas Reduction," as modified by the notice titled "Elimination of Classification Requirement in the Green Technology Pilot Program," each of which was published in the Federal Register, if the Office determines that the claims are not obviously directed to a single invention.

3. This request is accompanied by statements of special status for the eligibility requirement.

4. The application contains no more than three (3) independent claims and twenty (20) total claims.

5. The application does not contain any multiple dependent claims.

6. Other attachments: _____

Signature	Date October 28, 2011
Name (Print/Typed) Esther H. Chong	Registration Number 40953

Note: *Signatures of all the inventors or assignees of record of the entire interest or their representative(s) are required in accordance with 37 CFR 1.33 and 11.18. Please see 37 CFR 1.4(d) for the form of the signature. If necessary, submit multiple forms for more than one signature, see below*.*

☐ *Total of _____ forms are submitted.

The information is required to obtain or retain a benefit by the public which is to file (and by the USPTO to process) an application. Confidentiality is governed by 35 U.S.C. 122 and 37 CFR 1.11 and 1.14. This collection is estimated to take 12 hours to complete, including gathering, preparing, and submitting the completed application form to the USPTO. Time will vary depending upon the individual case. Any comments on the amount of time you require to complete this form and/or suggestions for reducing this burden, should be sent to the Chief Information Officer, U.S. Patent and Trademark Office, U.S. Department of Commerce, P.O. Box 1450, Alexandria, VA 22313-1450. DO NOT SEND FEES OR COMPLETED FORMS TO THIS ADDRESS. **SEND TO: Commissioner for Patents, P.O. Box 1450, Alexandria, VA 22313-1450.**

If you need assistance in completing the form, call 1-800-PTO-9199 and select option 2.

4

Docket No.: 2832-0634PUS1
(Patent)

IN THE UNITED STATES PATENT AND TRADEMARK OFFICE

Patent Application of:	Jeonghun SON et al.		
Application No.:	13/174,445	Confirmation No.:	1857
Filed:	June 30, 2011	Art Unit:	1725
For:	THIN FILM SOLAR CELL MODULE AND FABRICATING METHOD THEREOF	Examiner:	Not Yet Assigned

STATEMENT OF SPECIAL STATUS FOR THE ELIGIBILITY REQUIREMENT UNDER THE GREEN TECHNOLOGY PILOT PROGRAM

Commissioner for Patents
P.O. Box 1450
Alexandria, VA 22313-1450

Sir:

In support of the Petition to Make Special Under the Green Technology Pilot Program, it is respectfully submitted that the basis for the requested special status is that the invention claimed in the above-identified patent application materially contributes to the development of renewable energy sources and/or green house gas emission reduction. Specifically, the claimed invention relates to a solar cell.

Additionally, by filing this petition, the applicant agrees to make an election without traverse in a telephone interview and elect an invention that meets the eligibility requirements set for in the notice titled "Pilot Program for Green Technologies Including Greenhouse Gas Reduction," as modified by the notice titled "Elimination of Classification Requirement in the Green Technology Pilot Program," each of which was published in the Federal Register, if the Office determines that the claims are not obviously directed to a single invention.

It is also submitted that this application meets the eligibility requirements to participate in the Green Technology Pilot Program, as listed in the attached Petition to Make Special Under the Green Technology Pilot Program.

Accordingly, it is respectfully requested that the Petition be granted.

Should there be any outstanding matters that need to be resolved in the present application, the Examiner is respectfully requested to contact Seth S. Kim, Reg. No. 54,577, at the telephone number of the undersigned below to conduct an interview in an effort to expedite prosecution in connection with the present application.

If necessary, the Director is hereby authorized in this, concurrent, and future replies to charge any fees required during the pendency of the above-identified application or credit any overpayment to Deposit Account No. 02-2448.

Dated: OCT 28 2011

Respectfully submitted,

By _____

Esther H. Chong
Registration No.: 40953
BIRCH, STEWART, KOLASCH & BIRCH, LLP
8110 Gatehouse Road, Suite 100 East
P.O. Box 747
Falls Church, VA 22040-0747
703-205-8000

UNITED STATES PATENT AND TRADEMARK OFFICE

UNITED STATES DEPARTMENT OF COMMERCE
United States Patent and Trademark Office
Address: COMMISSIONER FOR PATENTS
P.O. Box 1450
Alexandria, Virginia 22313-1450
www.uspto.gov

APPLICATION NO.	FILING DATE	FIRST NAMED INVENTOR	ATTORNEY DOCKET NO.	CONFIRMATION NO.
13/174,445	06/30/2011	Jeonghun SON	2832-0634PUS1	1857

2292 7590 11/09/2011
BIRCH STEWART KOLASCH & BIRCH
PO BOX 747
FALLS CHURCH, VA 22040-0747

EXAMINER	
ART UNIT	PAPER NUMBER
1725	

NOTIFICATION DATE	DELIVERY MODE
11/09/2011	ELECTRONIC

Please find below and/or attached an Office communication concerning this application or proceeding.

The time period for reply, if any, is set in the attached communication.

Notice of the Office communication was sent electronically on above-indicated "Notification Date" to the following e-mail address(es):

mailroom@bskb.com

UNITED STATES PATENT AND TRADEMARK OFFICE

Commissioner for Patents
United States Patent and Trademark Office
P.O. Box 1450
Alexandria, VA 22313-1450
www.uspto.gov

BIRCH STEWART KOLASCH & BIRCH
PO BOX 747
FALLS CHURCH VA 22040-0747

Nov.09, 2011

In re Application of	:	
Son et al.	:	DECISION ON PETITION
Application No. 13/174,445	:	TO MAKE SPECIAL UNDER
Filed: 6/30/2011	:	THE GREEN TECHNOLOGY
Attorney Docket No. **2832-0634PUS1**	:	PILOT PROGRAM

This is a decision on the petition under 37 CFR 1.102, filed 10/28/2011, to make the above-identified application special under the pilot program for applications pertaining to Green Technologies as set forth in 74 Federal Register Notice 64666 (December 8, 2009) and amended by 75 Federal Register Notice 28554 (May 21, 2010) and 75 Federal Register Notice 69049 (November 10, 2010).

The petition is **GRANTED**.

A grantable petition to make an application special under 37 CFR 1.102 and the pilot program as set forth in 74 FR 64666 must be directed to a nonprovisional application filed under 35 USC 111(a) or be a national stage entry under 35 USC 371, exclusive of any reissue applications.

In order to qualify for special status, the following requirements must be met. 1) The application must have no more than 3 independent claims and no more than 20 total claims. 2) The application must not contain any multiple dependent claims. 3) The petition must state the basis for seeking special status, i.e., the claimed invention either: A) materially enhances the quality of the environment or B) materially contributes to: i) the discovery or development of renewable energy resources, ii) the more efficient utilization and conservation of energy resources, or iii) greenhouse gas emission reduction. 4) If the disclosure is not clear on its face that the claimed invention materially contributes under category (A) or (B), the petition must be accompanied by a statement by the applicant, assignee, or an attorney/agent registered to practice before the Office explaining how the materiality standard is met. 5) A statement that applicant will agree to make an election without traverse in a telephonic interview if a restriction requirement is made by the examiner. 6) The petition to make special must be filed electronically. 7) The petition must be filed at least one day prior to the date that a first Office Action appears in the Patent Application Information Retrieval (PAIR) system. 8) The petition must be accompanied by a request for early publication in compliance with 37 CFR 1.219 and include the publication fee as set forth in 37 CFR 1.18(d).

The requirement for a fee for consideration of the petition to make special for applications pertaining to Green Technologies has been waived.

The instant petition complies with items 1 – 8 above. Accordingly, the above-identified application has been accorded "special" status.

Telephone inquires concerning this decision should be directed to Tom Dunn at 571-272-1171.

The application is being forwarded to the Technology Center Art Unit 1725 for action on the merits commensurate with this decision.

/Tom Dunn/

Tom Dunn
Quality Assurance Specialist
Technology Center 1700

UNITED STATES PATENT AND TRADEMARK OFFICE

Commissioner for Patents
United States Patent and Trademark Office
P.O. Box 1450
Alexandria, VA 22313-1450
www.uspto.gov

MAILED

MAR 12 2012

OFFICE OF PETITIONS

DOCKET CLERK/HTCL
P.O. BOX DRAWER 800889
DALLAS TX 75380

Applicants: Guoqiao Chen et al
Appl. No.: 13/174,474
Filing Date: June 30, 2011
Title: METHOD FOR RECEIVING AND SENDING MEDIA, USER EQUIPMENT, AND SERVICE GUIDE SERVER
Attorney Docket: HUAW02-15297
Pub. No.: US 20110265122 A1
Pub. Date: October 27, 2011

This is a decision on the request for a corrected patent application publication under 37 CFR 1.221(b), received on December 22, 2011, for the above-identified application.

The request is granted.

The corrected patent application publication will be published in due course, unless the patent issues before the application is republished.

Inquiries relating to this matter may be directed to Karen Creasy at (571) 272-3208.

/Christopher Bottorff/

Christopher Bottorff
Petitions Examiner
Office of Petitions

Doc Code: PET.GREEN
Document Description: Petition for Green Tech Pilot

PTO/SB/420 (03-11)

PETITION TO MAKE SPECIAL UNDER THE GREEN TECHNOLOGY PILOT PROGRAM

Attorney Docket Number: 246824	Application Number (if known): 13/174,488	Filing date: 06-30-2011

First Named Inventor: Nilesh Tralshawala

Title: NUCLEAR QUADRUPOLE RESONANCE SYSTEM AND METHOD FOR STRUCUTRAL HEALTH MONITORING

APPLICANT HEREBY REQUESTS TO PARTICIPATE IN THE GREEN TECHNOLOGY PILOT PROGRAM FOR THE ABOVE-IDENTIFIED APPLICATION. See Instruction Sheet on page 2.

This petition must be timely filed electronically using the USPTO electronic filing system, EFS-Web.

1. By filing this petition:

   Applicant is requesting early publication: Applicant hereby requests early publication under 37 CFR 1.219 and the publication fee set forth in 37 CFR 1.18(d) accompanies this request.

2. By filing this petition: applicant is agreeing to make an election without traverse in a telephonic interview and elect an invention that meets the eligibility requirements for the Green Technology Pilot Program, if the Office determines that the claims are not obviously directed to a single invention. See Instruction Sheet.

3. This request is accompanied by statements of special status for the eligibility requirement.

4. The application contains no more than three (3) independent claims and twenty (20) total claims.

5. The application does not contain any multiple dependent claims.

6. Other attachments: Statement Concerning the Basis for the Special Status

Signature /Allison W. Mages/	Date October 11, 2011
Name (Print/Typed) Allison W. Mages	Registration Number 57,275

Note: Signatures of all the inventors or assignees of record of the entire interest or their representative(s) are required in accordance with 37 CFR 1.33 and 11.18. Please see 37 CFR 1.4(d) for the form of the signature. If necessary, submit multiple forms for more than one signature, see below.*

☐ *Total of _____ forms are submitted.

If you need assistance in completing the form, call 1-800-PTO-9199 and select option 2.

IN THE UNITED STATES PATENT AND TRADEMARK OFFICE

First Named Inventor: Nilesh Tralshawala	)
Confirmation No.: 1929	)
	)
Serial No.: 13/174,488	)
	)
Filing Date: 06-30-2011	)
	)
Atty Docket No.: 246824	)

VIA EFS
Commissioner for Patents
P.O. Box 1450
Alexandria, VA 22313-1450

Statement Concerning the Basis for the Special Status

SIR:

The present application relates to structural health monitoring of materials, and more specifically, to systems and methods for structural health monitoring using nuclear quadrupole resonance (NQR). A wind turbine blade may be constructed having a composite with an NQR tracer. Using the techniques described in the application, an average operating life of the wind turbine blade may be determined. (See [0001], [0021]).

Applicant respectfully submits that Special Status is sought on the basis that the present invention materially contributes to the discovery or development of renewable energy resources.

The undersigned representative may be contacted at the number below to facilitate the resolution of any matters. Please charge any fees that are incurred in connection with this Statement to deposit account no. 09-0470.

Respectfully submitted,

General Electric Company

By : /Allison W. Mages/
Allison W. Mages
Reg. No. 57,275

Dated: October 11, 2011

GE Global Patent Operation
2 Corporate Drive, Suite 648
Shelton, CT 06484
203-944-6730

UNITED STATES PATENT AND TRADEMARK OFFICE

UNITED STATES DEPARTMENT OF COMMERCE
United States Patent and Trademark Office
Address: COMMISSIONER FOR PATENTS
P.O. Box 1450
Alexandria, Virginia 22313-1450
www.uspto.gov

APPLICATION NO.	FILING DATE	FIRST NAMED INVENTOR	ATTORNEY DOCKET NO.	CONFIRMATION NO.
13/174,488	06/30/2011	Nilesh Tralshawala	246824-1	1929

6147 7590 10/27/2011

GENERAL ELECTRIC COMPANY
GLOBAL RESEARCH
ONE RESEARCH CIRCLE
BLDG. K1-3A59
NISKAYUNA, NY 12309

EXAMINER	
PHAN, HUY Q	
ART UNIT	**PAPER NUMBER**
2858	

NOTIFICATION DATE	DELIVERY MODE
10/27/2011	ELECTRONIC

Please find below and/or attached an Office communication concerning this application or proceeding.

The time period for reply, if any, is set in the attached communication.

Notice of the Office communication was sent electronically on above-indicated "Notification Date" to the following e-mail address(es):

ldocket@crd.ge.com
wahld@ge.com
haeckl@ge.com

UNITED STATES PATENT AND TRADEMARK OFFICE

Commissioner for Patents
United States Patent and Trademark Office
P.O. Box 1450
Alexandria, VA 22313-1450
www.uspto.gov

GENERAL ELECTRIC COMPANY
GLOBAL RESEARCH
ONE RESEARCH CIRCLE
BLDG. K1-3A59
NISKAYUNA NY 12309

In re Application of	:	
TRALSHAWALA et al.	:	DECISION ON PETITION
Application No. 13/174,488	:	TO MAKE SPECIAL UNDER
Filed: June 30, 2011	:	THE GREEN TECHNOLOGY
Attorney Docket No. 246824-1	:	PILOT PROGRAM

This is a decision on the petition under 37 CFR 1.102, filed on October 11, 2011, to make the above-identified application special under the pilot program for applications pertaining to Green Technologies as set forth 74 Federal Register Notice 64666 (December 8, 2009) and amended by 75 Federal Register Notice 28554 (May 21, 2010) and 75 Federal Register Notice 69049 (November 10, 2010).

The petition is **GRANTED**.

A grantable petition to make an application special under 37 CFR 1.102 and the pilot program as set forth in 74 FR 64666 must be directed to a nonprovisional application filed under 35 USC 111(a) or be a national stage entry under 35 USC 371, exclusive of any reissue applications.

In order to qualify for special status, the following requirements must be met. 1) The application must have no more than 3 independent claims and no more than 20 total claims. 2) The application must not contain any multiple dependent claims. 3) The petition must state the basis for seeking special status, i.e., the claimed invention either: A) materially enhances the quality of the environment or B) materially contributes to: i) the discovery or development of renewable energy resources, ii) the more efficient utilization and conservation of energy resources, or iii) greenhouse gas emission reduction. 4) If the disclosure is not clear on its face that the claimed invention materially contributes under category (A) or (B), the petition must be accompanied by a statement by the applicant, assignee, or an attorney/agent registered to practice before the Office explaining how the materiality standard is met. 5) A statement that applicant will agree to make an election without traverse in a telephonic interview if a restriction requirement is made by the examiner. 6) The petition to make special must be filed electronically. 7) The petition must be filed at least one day prior to the date that a first Office Action appears in the Patent Application Information Retrieval (PAIR) system. 8) The petition must be accompanied by a request for early publication in compliance with 37 CFR 1.219 and include the publication fee as set forth in 37 CFR 1.18(d).

The requirement for a fee for consideration of the petition to make special for applications pertaining to Green Technologies has been waived.

The instant petition complies with items 1 – 8 above. Accordingly, the above-identified application has been accorded "special" status.

Telephone inquiries concerning this decision should be directed to Lee W. Young at 571-272-4549.

The application is being forwarded to the Technology Center Art Unit 2858 for action on the merits commensurate with this decision.

Lee W. Young
Quality Assurance Specialist
Technology Center 2600

Doc Code: PET.GREEN
Document Description: Petition for Green Tech Pilot

PTO/SB/420 (05-10)
Approved for use through 01/31/2011. OMB 0651-0062
U.S. Patent and Trademark Office; U. S. DEPARTMENT OF COMMERCE
Under the Paperwork Reduction Act of 1995, no persons are required to respond to a collection of information unless it displays a valid OMB control number.

PETITION TO MAKE SPECIAL UNDER THE GREEN TECHNOLOGY PILOT PROGRAM

Attorney Docket Number: 26139-18836 US	Application Number (if known): 13/174,580	Filing date: June 30, 2011

First Named Inventor: David A. Berry et al.

Title: Engineered CO2 Fixing Microorganisms Producing Carbon-Based Products of Interest

APPLICANT HEREBY REQUESTS TO PARTICIPATE IN THE GREEN TECHNOLOGY PILOT PROGRAM FOR THE ABOVE-IDENTIFIED APPLICATION. **See Instruction Sheet on page 2.**

This petition must be timely filed electronically using the USPTO electronic filing system, EFS-Web.

1. By filing this petition:

   Applicant is requesting early publication: Applicant hereby requests early publication under 37 CFR 1.219 and the publication fee set forth in 37 CFR 1.18(d) accompanies this request.

2. By filing this petition: applicant is agreeing to make an election without traverse in a telephonic interview and elect an invention that meets the eligibility requirements set forth in the notice titled "Pilot Program for Green Technologies Including Greenhouse Gas Reduction," as modified by the notice titled "Elimination of Classification Requirement in the Green Technology Pilot Program," each of which was published in the Federal Register, if the Office determines that the claims are not obviously directed to a single invention.

3. This request is accompanied by statements of special status for the eligibility requirement.

4. The application contains no more than three (3) independent claims and twenty (20) total claims.

5. The application does not contain any multiple dependent claims.

6. Other attachments: Statement explaining the basis for special status

Signature /Chris Ullsperger/	Date June 30, 2011
Name (Print/Typed) Chris J. Ullsperger	Registration Number 48,006

Note: *Signatures of all the inventors or assignees of record of the entire interest or their representative(s) are required in accordance with 37 CFR 1.33 and 11.18. Please see 37 CFR 1.4(d) for the form of the signature. If necessary, submit multiple forms for more than one signature, see below*.*

☑ *Total of one forms are submitted.

The information is required to obtain or retain a benefit by the public which is to file (and by the USPTO to process) an application. Confidentiality is governed by 35 U.S.C. 122 and 37 CFR 1.11 and 1.14. This collection is estimated to take 1 hour to complete, including gathering, preparing, and submitting the completed application form to the USPTO. Time will vary depending upon the individual case. Any comments on the amount of time you require to complete this form and/or suggestions for reducing this burden, should be sent to the Chief Information Officer, U.S. Patent and Trademark Office, U.S. Department of Commerce, P.O. Box 1450, Alexandria, VA 22313-1450. DO NOT SEND FEES OR COMPLETED FORMS TO THIS ADDRESS. **SEND TO: Commissioner for Patents, P.O. Box 1450, Alexandria, VA 22313-1450.**

If you need assistance in completing the form, call 1-800-PTO-9199 and select option 2.

UNITED STATES PATENT AND TRADEMARK OFFICE

UNITED STATES DEPARTMENT OF COMMERCE
United States Patent and Trademark Office
Address: COMMISSIONER FOR PATENTS
P.O. Box 1450
Alexandria, Virginia 22313-1450
www.uspto.gov

APPLICATION NO.	FILING DATE	FIRST NAMED INVENTOR	ATTORNEY DOCKET NO.	CONFIRMATION NO.
13/174,580	06/30/2011	David A. Berry	26139-18836	1083

96157 7590 08/03/2011

Joule/Fenwick
Silicon Valley Center
801 California Street
Mountain View, CA 94041

EXAMINER
KALLIS, RUSSELL

ART UNIT	PAPER NUMBER
1638	

NOTIFICATION DATE	DELIVERY MODE
08/03/2011	ELECTRONIC

Please find below and/or attached an Office communication concerning this application or proceeding.

The time period for reply, if any, is set in the attached communication.

Notice of the Office communication was sent electronically on above-indicated "Notification Date" to the following e-mail address(es):

ptoc@fenwick.com
cullsperger@fenwick.com
chong@jouleunlimited.com

UNITED STATES PATENT AND TRADEMARK OFFICE

Commissioner for Patents
United States Patent and Trademark Office
P.O. Box 1450
Alexandria, VA 22313-1450
www.uspto.gov

AUG 03 2011

Joule/Fenwick
Silicon Valley Center
801 California Street
Mountain View CA 94041

In re Application of

BERRY, DAVID *et al.*	:	DECISION ON PETITION
Application No. 13/174580	:	TO MAKE SPECIAL UNDER
Filed: June 30, 2011	:	THE GREEN TECHNOLOGY
Attorney Docket No. 26139-18836	:	PILOT PROGRAM

This is a decision on the petition under 37 CFR 1.102, filed June 30, 2011, to make the above-identified application special under the pilot program for applications pertaining to Green Technologies as set forth in 74 Federal Register Notice 64666 (December 8, 2009) and amended by 75 Federal Register Notice 28554 (May 21, 2010) and 75 Federal Register Notice 69049 (November 10, 2010).

The petition is **GRANTED**.

A grantable petition to make an application special under 37 CFR 1.102 and the pilot program as set forth in 74 FR 64666 must be directed to a nonprovisional application filed under 35 USC 111(a) or be a national stage entry under 35 USC 371, exclusive of any reissue applications.

In order to qualify for special status, the following requirements must be met. 1) The application must have no more than 3 independent claims and no more than 20 total claims. 2) The application must not contain any multiple dependent claims. 3) The petition must state the basis for seeking special status, i.e., the claimed invention either: A) materially enhances the quality of the environment or B) materially contributes to: i) the discovery or development of renewable energy resources, ii) the more efficient utilization and conservation of energy resources, or iii) greenhouse gas emission reduction. 4) If the disclosure is not clear on its face that the claimed invention materially contributes under category (A) or (B), the petition must be accompanied by a statement by the applicant, assignee, or an attorney/agent registered to practice before the Office explaining how the materiality standard is met. 5) A statement that applicant will agree to make an election without traverse in a telephonic interview if a restriction requirement is made by the examiner. 6) The petition to make special must be filed electronically. 7) The petition must be filed at least one day prior to the date that a first Office Action appears in the Patent Application Information Retrieval (PAIR) system. 8) The petition must be accompanied by a request for early publication in compliance with 37 CFR 1.219 and include the publication fee as set forth in 37 CFR 1.18(d).

The requirement for a fee for consideration of the petition to make special for applications pertaining to Green Technologies has been waived.

The instant petition complies with items 1 – 8 above. Accordingly, the above-identified application has been accorded "special" status.

Telephone inquires concerning this decision should be directed to Manjunath Rao at 571-272-0939.

The application is being forwarded to the Technology Center Art Unit 1638 for action on the merits commensurate with this decision.

/Manjunath Rao/

Manjunath Rao
Supervisory Patent Examiner &
POC for TC 1600 Green Tech Petitions
Technology Center 1600

UNITED STATES PATENT AND TRADEMARK OFFICE

Commissioner for Patents
United States Patent and Trademark Office
P.O. Box 1450
Alexandria, VA 22313-1450
www.uspto.gov

PROCOPIO, CORY, HARGREAVES & SAVITCH LLP
525 B STREET
SUITE 2200
SAN DIEGO CA 92101

MAILED
OCT 07 2011
OFFICE OF PETITIONS

In re Application of
Azevedo, et al.
Application No. 13/174,684
Filed: June 30, 2011
Atty. Dkt. No.: 116546-2205C2

: DECISION REFUSING STATUS
: UNDER 37 CFR 1.47(a)

This decision is in response to the petition under 37 CFR 1.47(a) filed September 22, 2011.

On July 22, 2011, the Office mailed a Notice to File Missing Parts requiring submission of an oath or declaration. September 22, 2011, applicants filed several documents, including copies of a declaration, petition, and petition decision from parent Application No. 11/692,101.

The instant application is a continuation of Application No. 11/692,101. When a parent application has been accorded status under 37 CFR 1.47, an applicant may submit a copy of the declaration from the parent application and a copy of the parent application's Rule 47 decision letter instead of submitting a new petition under 37 CFR 1.47.[1] Therefore, a separate and new petition is unnecessary.

The declaration filed September 22, 2011, is accepted and the signing inventors may prosecute the application on behalf of the non-signing inventor.

The application is hereby accorded Rule 1.47(a) status.

For the reasons above, the petition under 37 CFR 1.47 filed September 22, 2011, is dismissed as moot.

This application is being directed to the Office of Patent Application Processing for further processing.

[1] 37 CFR 1.63(d)(3) states, "[w]here the executed oath or declaration of which a copy is submitted for a continuation or divisional application was originally filed in a prior application accorded status under § 1.47, the copy of the executed oath or declaration for such prior application must be accompanied by: (i) A copy of the decision granting a petition to accord § 1.47 status to the prior application, unless all inventors or legal representatives have filed an oath or declaration to join in an application accorded status under § 1.47 of which the continuation or divisional application claims a benefit under 35 U.S.C. 120, 121, or 365(c)."

Telephone inquiries related to this decision may be directed to the undersigned at (571) 272-3205.

/ALESIA M. BROWN/

Alesia M. Brown
Attorney Advisor
Office of Petitions

Doc code : PET.OP.AGE
Description : Petition to make special based on Age/Health

PTO/SB/130 (07-09)
Approved for use through 07/31/2012. OMB 0651- 0031
U.S. Patent and Trademark Office; U.S. DEPARTMENT OF COMMERCE
Under the Paperwork Reduction Act of 1995, no persons are required to respond to a collection of information unless it contains a valid OMB control number

PETITION TO MAKE SPECIAL BASED ON AGE FOR ADVANCEMENT OF EXAMINATION UNDER 37 CFR 1.102(c)(1)

Application Information

Application Number	13/174,686	Confirmation Number	1246	Filing Date	2011-06-30
Attorney Docket Number (optional)	11109-P-G	Art Unit	1726	Examiner	
First Named Inventor	Fischel, Halbert				
Title of Invention	THICK ELECTRODE DIRECT REACTION FUEL CELLS UTILIZING CROSS-FLOWS AND TAYLOR VORTEX FLOWS				

Attention: Office of Petitions
An application may be made special for advancement of examination upon filing of a petition showing that the applicant is 65 years of age, or more. No fee is required with such a petition. See 37 CFR 1.102(c)(1) and MPEP 708.02 (IV).

APPLICANT HEREBY PETITIONS TO MAKE SPECIAL FOR ADVANCEMENT OF EXAMINATION IN THIS APPLICATION UNDER 37 CFR 1.102(c)(1) and MPEP 708.02 (IV) ON THE BASIS OF THE APPLICANT'S AGE.

A grantable petition requires one of the following items:
(1) Statement by one named inventor in the application that he/she is 65 years of age, or more; or
(2) Certification by a registered attorney/agent having evidence such as a birth certificate, passport, driver's license, etc. showing one named inventor in the application is 65 years of age, or more.

Name of Inventor who is 65 years of age, or older

Given Name	Middle Name	Family Name	Suffix
Halbert	Paul	Fischel	

A signature of the applicant or representative is required in accordance with 37 CFR 1.33 and 10.18.
Please see 37 CFR 1.4(d) for the format of the signature.

Select (1) or (2) :

○ (1) I am an inventor in this application and I am 65 years of age, or more.

◉ (2) I am an attorney or agent registered to practice before the Patent and Trademark Office, and I certify that I am in possession of evidence, and will retain such in the application file record, showing that the inventor listed above is 65 years of age, or more.

Signature	/Sheldon Epstein/	Date (YYYY-MM-DD)	2011-07-27
Name	Sheldon L. Epstein	Registration Number	22343

PTO/SB/130 (07-09)
Approved for use through 07/31/2012. OMB 0651- 0031
U.S. Patent and Trademark Office; U.S. DEPARTMENT OF COMMERCE
Under the Paperwork Reduction Act of 1995, no persons are required to respond to a collection of information unless it contains a valid OMB control number

Privacy Act Statement

The Privacy Act of 1974 (P.L. 93-579) requires that you be given certain information in connection with your submission of the attached form related to a patent application or patent. Accordingly, pursuant to the requirements of the Act, please be advised that: (1) the general authority for the collection of this information is 35 U.S.C. 2(b)(2); (2) furnishing of the information solicited is voluntary; and (3) the principal purpose for which the information is used by the U.S. Patent and Trademark Office is to process and/or examine your submission related to a patent application or patent. If you do not furnish the requested information, the U.S. Patent and Trademark Office may not be able to process and/or examine your submission, which may result in termination of proceedings or abandonment of the application or expiration of the patent.

The information provided by you in this form will be subject to the following routine uses:

1. The information on this form will be treated confidentially to the extent allowed under the Freedom of Information Act (5 U.S.C. 552) and the Privacy Act (5 U.S.C. 552a). Records from this system of records may be disclosed to the Department of Justice to determine whether the Fr eedom of Information Act requires disclosure of these records.

2. A record from this system of records may be disclosed, as a routine use, in the course of presenting evidence to a court, magistrate, or administrative tribunal, including disclosures to opposing counsel in the course of settlement negotiations.

3. A record in this system of records may be disclosed, as a routine use, to a Member of Congress submitting a request involving an individual, to whom the record pertains, when the individual has requested assistance from the Member with respect to the subject matter of the record.

4. A record in this system of records may be disclosed, as a routine use, to a contractor of the Agency having need for the information in order to perform a contract. Recipients of information shall be required to comply with the requirements of the Privacy Act of 1974, as amended, pursuant to 5 U.S.C. 552a(m).

5. A record related to an International Application filed under the Patent Cooperation Treaty in this system of records may be disclosed, as a routine use, to the International Bureau of the World Intellectual Property Organization, pursuant to the Patent Cooperation Treaty.

6. A record in this system of records may be disclosed, as a routine use, to another federal agency for purposes of National Security review (35 U.S.C. 181) and for review pursuant to the Atomic Energy Act (42 U.S.C. 218(c)).

7. A record from this system of records may be disclosed, as a routine use, to the Administrator, General Services, or his/her designee, during an inspection of records conducted by GSA as part of that agency's responsibility to recommend improvements in records management practices and programs, under authority of 44 U.S.C. 2904 and 2906. Such disclosure shall be made in accordance with the GSA regulations governing inspection of records for this purpose, and any other relevant (i.e., GSA or Commerce) directive. Such disclosure shall not be used to make determinations about indivi duals.

8. A record from this system of records may be disclosed, as a routine use, to the public after either publication of the application pursuant to 35 U.S.C. 122(b) or issuance of a patent pursuant to 35 U.S.C. 151. Further, a record may be disclosed, subject to the limitations of 37 CFR 1.14, as a routine use, to the public if the record was filed in an application which became abandoned or in which the proceedings were terminated and which application is referenced by either a published application, an application open to public inspections or an issued patent.

9. A record from this system of records may be disclosed, as a routine use, to a Federal, State, or local law enforcement agency, if the USPTO becomes aware of a violation or potential violation of law or regulation.

UNITED STATES PATENT AND TRADEMARK OFFICE

Commissioner for Patents
United States Patent and Trademark Office
P.O. Box 1450
Alexandria, VA 22313-1450
www.uspto.gov

In re Application of
HALBERT FISCHEL

Application No. 13174686

Filed: June 30,2011

Attorney Docket No. 11109-P-G

:
:
:DECISION ON PETITION TO MAKE SPECIAL
:UNDER 37 CFR 1.102(c)(1)
:

This is a decision on the electronic petition under 37 CFR 1.102 (c)(1), filed 27-JUL-2011 to make the above-identified application special based on applicant's age as set forth in MPEP § 708.02, Section IV.

The petition is **GRANTED**.

A grantable petition to make an application special under 37 CFR 1.102(c)(1), MPEP § 708.02, Section IV: Applicant's Age must include a statement by applicant or a registered practitioner having evidence that applicant is at least 65 years of age. No fee is required.

Accordingly, the above-identified application has been accorded "special" status and will be taken up for action by the examiner upon the completion of all pre-examination processing.

Telephone inquiries concerning this electronic decision should be directed to the Electronic Business Center at 866-217-9197.

All other inquiries concerning either the examination or status of the application should be directed to the Technology Center.

UNITED STATES PATENT AND TRADEMARK OFFICE

UNITED STATES DEPARTMENT OF COMMERCE
United States Patent and Trademark Office
Address: COMMISSIONER FOR PATENTS
P.O. Box 1450
Alexandria, Virginia 22313-1450
www.uspto.gov

APPLICATION NO.	FILING DATE	FIRST NAMED INVENTOR	ATTORNEY DOCKET NO.	CONFIRMATION NO.
13/174,687	06/30/2011	Larry Murray	FN-373A-US	1250

72104 7590 12/15/2011

FotoNation/DOC
Patent Legal Dept.
3025 Orchard Parkway
San Jose, CA 95134

EXAMINER	
ART UNIT	PAPER NUMBER
2443	

NOTIFICATION DATE	DELIVERY MODE
12/15/2011	ELECTRONIC

Please find below and/or attached an Office communication concerning this application or proceeding.

The time period for reply, if any, is set in the attached communication.

Notice of the Office communication was sent electronically on above-indicated "Notification Date" to the following e-mail address(es):

v-gubau@doc.com
asmith@doc.com

UNITED STATES PATENT AND TRADEMARK OFFICE

Commissioner for Patents
United States Patent and Trademark Office
Washington, D.C. 20231
www.uspto.gov

MAILED

DEC 15 2011

DIRECTOR OFFICE
TECHNOLOGY CENTER 2400

Andrew V. Smith Reg. No. 43132.
TESSERA/FOTONATION Patent Legal Dept.
3025 Orchard Parkway
San Jose, CA 95134

In re Application of:	)	
Larry Murray, et al.	)	
Application No. 13174687	)	DECISION ON PETITION UNDER 37
Filed: June 30, 2011	)	C.F.R. ∋ 1.84(b)(2) TO ACCEPT
For: DYNAMICALLY VARIABLE	)	COLOR PHOTOGRAPHS
STEREO BASED FOR (3D)	)	
PANORAMA CREATION ON	)	
HANDHELD DEVICE	)	

This is a decision on the petition under 37 C.F.R. ∋ 1.84(b)(2), filed June 30, 2011, requesting acceptance of color Photographs.

The petition requests that the color Photographs, although not specifically identified but noted as, figures 7A, 7B, 10, 11, 13, 14A, 14B, be accepted in lieu of black and white drawings. Furthermore, colored drawings 15, 18 – 22, also not specifically identified but noted, also apply.

Color photographs will be accepted in utility and design patent applications if the conditions for accepting color drawings and black and white photographs have been satisfied. See paragraphs (a)(2) and (b)(1) of this section.

A grantable petition under 37 C.F.R. □ 1.84(b)(2) must be accompanied by a fee set forth under 37 C.F.R. □ 1.17(h), 3 (three) sets of the color drawings in question, and the specification must contain, or be amended to contain, the following language as the first paragraph in that portion of the specification relating to the brief description of the drawings:

"The Patent or application file contains at least one drawing executed in color. Copies of this patent application publication with color drawing(s) will be provided by the Office upon request and payment of the necessary fee."

Furthermore, "On rare occasions, color drawings may be necessary as the only practical medium by which to disclose the subject matter sought to be patented in a utility or design patent application or the subject matter of a statutory invention registration. The color drawings must be of sufficient quality such that all details in the drawings are reproducible in black and white in the printed patent."

The photographs do not appear to be the only practical medium by which to disclose the subject matter.

The petition is Dismissed.

The application file is being return to the Central Files waiting for applicant's response.

Any inquiry regarding this decision should be directed the undersigned whose telephone number is (571) 272-3912.

/David England/

David England
Primary Examiner, AU 2443
Technology Center 2400

/Tonia L. M. Dollinger/

Tonia L. M. Dollinger
Supervisory Patent Examiner, AU 2443
Technology Center 2400

UNITED STATES PATENT AND TRADEMARK OFFICE

UNITED STATES DEPARTMENT OF COMMERCE
United States Patent and Trademark Office
Address: COMMISSIONER FOR PATENTS
P.O. Box 1450
Alexandria, Virginia 22313-1450
www.uspto.gov

APPLICATION NO.	FILING DATE	FIRST NAMED INVENTOR	ATTORNEY DOCKET NO.	CONFIRMATION NO.
13/174,716	06/30/2011	Larry Murray	FN-373B-US	1298

72104 7590 12/15/2011

FotoNation/DOC
Patent Legal Dept.
3025 Orchard Parkway
San Jose, CA 95134

EXAMINER	
ART UNIT	PAPER NUMBER
2443	

NOTIFICATION DATE	DELIVERY MODE
12/15/2011	ELECTRONIC

Please find below and/or attached an Office communication concerning this application or proceeding.

The time period for reply, if any, is set in the attached communication.

Notice of the Office communication was sent electronically on above-indicated "Notification Date" to the following e-mail address(es):

v-gubau@doc.com
asmith@doc.com

UNITED STATES PATENT AND TRADEMARK OFFICE

Commissioner for Patents
United States Patent and Trademark Office
Washington, D.C. 20231
www.uspto.gov

MAILED

DEC 15 2011

DIRECTOR OFFICE
TECHNOLOGY CENTER 2400

Andrew V. Smith Reg. No. 43132.
TESSERA/FOTONATION Patent Legal Dept.
3025 Orchard Parkway
San Jose, CA 95134

In re Application of:	)
Larry Murray, et al.	)
Application No. 13174716	) DECISION ON PETITION UNDER 37
Filed: June 30, 2011	) C.F.R. ∋ 1.84(b)(2) TO ACCEPT
For: VARIABLE STEREO BASED FOR	) COLOR PHOTOGRAPHS
(3D) PANORAMA CREATION ON	)
HANDHELD DEVICE	)
	)

This is a decision on the petition under 37 C.F.R. ∋ 1.84(b)(2), filed June 30, 2011, requesting acceptance of color Photographs.

The petition requests that the color Photographs, although not specifically identified but noted as, figures 7A, 7B, 10, 11, 13, 14A, 14B, be accepted in lieu of black and white drawings. Furthermore, colored drawings 15, 18 – 22, also not specifically identified but noted, also apply.

Color photographs will be accepted in utility and design patent applications if the conditions for accepting color drawings and black and white photographs have been satisfied. See paragraphs (a)(2) and (b)(1) of this section.

A grantable petition under 37 C.F.R. □ 1.84(b)(2) must be accompanied by a fee set forth under 37 C.F.R. □ 1.17(h), 3 (three) sets of the color drawings in question, and the specification must contain, or be amended to contain, the following language as the first paragraph in that portion of the specification relating to the brief description of the drawings:

"The Patent or application file contains at least one drawing executed in color. Copies of this patent application publication with color drawing(s) will be provided by the Office upon request and payment of the necessary fee."

Furthermore, "On rare occasions, color drawings may be necessary as the only practical medium by which to disclose the subject matter sought to be patented in a utility or design patent application or the subject matter of a statutory invention registration. The color drawings must be of sufficient quality such that all details in the drawings are reproducible in black and white in the printed patent."

The photographs do not appear to be the only practical medium by which to disclose the subject matter.

The petition is **Dismissed**.

The application file is being return to the Central Files waiting for applicant's response.

Any inquiry regarding this decision should be directed the undersigned whose telephone number is (571) 272-3912.

/David England/

David England
Primary Examiner, AU 2443
Technology Center 2400

/Tonia L. M. Dollinger/

Tonia L. M. Dollinger
Supervisory Patent Examiner, AU 2443
Technology Center 2400

Doc Code: PET.GREEN
Document Description: Petition for Green Tech Pilot

PTO/SB/420 (03-11)

PETITION TO MAKE SPECIAL UNDER THE GREEN TECHNOLOGY PILOT PROGRAM

Attorney Docket Number: ABI-100	Application Number (if known): 13/174,849	Filing date: July 1, 2011

First Named Inventor: ELLENS

Title: METHODS FOR INTEGRATED FAST PYROLYSIS PROCESSING OF BIOMASS

APPLICANT HEREBY REQUESTS TO PARTICIPATE IN THE GREEN TECHNOLOGY PILOT PROGRAM FOR THE ABOVE-IDENTIFIED APPLICATION. See Instruction Sheet on page 2.

This petition must be timely filed electronically using the USPTO electronic filing system, EFS-Web.

1. By filing this petition:

   Applicant is requesting early publication: Applicant hereby requests early publication under 37 CFR 1.219 and the publication fee set forth in 37 CFR 1.18(d) accompanies this request.

2. By filing this petition: applicant is agreeing to make an election without traverse in a telephonic interview and elect an invention that meets the eligibility requirements for the Green Technology Pilot Program, if the Office determines that the claims are not obviously directed to a single invention. See Instruction Sheet.

3. This request is accompanied by statements of special status for the eligibility requirement.

4. The application contains no more than three (3) independent claims and twenty (20) total claims.

5. The application does not contain any multiple dependent claims.

6. Other attachments: STATEMENT FOR GREEN TECHNOLOGY PILOT PROGRAM

Signature /Ryan P. O'Connor/	Date July 1, 2011
Name (Print/Typed) Ryan P. O'Connor	Registration Number 56693

Note: *Signatures of all the inventors or assignees of record of the entire interest or their representative(s) are required in accordance with 37 CFR 1.33 and 11.18. Please see 37 CFR 1.4(d) for the form of the signature. If necessary, submit multiple forms for more than one signature, see below*.*

☐ *Total of _____ forms are submitted.

If you need assistance in completing the form, call 1-800-PTO-9199 and select option 2.

Instruction Sheet for
Petition to Make Special Under the Green Technology Pilot Program

(Not to be Submitted to the USPTO)

The following is a summary of the requirements (for more information see the notices (i) "Pilot Program for Green Technologies Including Greenhouse Gas Reduction," (ii) "Elimination of Classification Requirement in the Green Technology Pilot Program," and (iii) "Expansion and Extension of the Green Technology Pilot Program," available on the USPTO web site at http://www.uspto.gov/patents/init_events/green_tech.jsp):

(1) The application must be a non-reissue, non-provisional utility application filed under 35 U.S.C. 111(a), or an international application that has entered the national stage in compliance with 35 U.S.C. 371, irrespective of the filing date of the application. Reexamination proceedings are excluded from this pilot program.

(2) The application must contain three or fewer independent claims and twenty or fewer total claims. The application must not contain any multiple dependent claims. For an application that contains more than three independent claims or twenty total claims, or multiple dependent claims, applicant must file a preliminary amendment in compliance with 37 CFR 1.121 to cancel the excess claims and/or the multiple dependent claims at the time the petition to make special is filed.

(3) The claims must be directed to a single invention that materially enhances the quality of the environment, or that materially contributes to: (1) the discovery or development of renewable energy resources; (2) the more efficient utilization and conservation of energy resources; or (3) green house gas emission reduction (see the eligibility requirements of sections II and III of the notice (i) cited above). The petition must include a statement that, if the USPTO determines that the claims are directed to multiple inventions (e.g., in a restriction requirement), applicant will agree to make an election without traverse in a telephonic interview, and elect an invention that meets the eligibility requirements in section II or III of the notice (i) cited above.

(4) The petition to make special must be timely filed electronically using the USPTO electronic filing system, EFS-Web, and selecting the document description of "Petition for Green Tech Pilot" on the EFS-Web screen. Applicant should use form PTO/SB/420, which is available as a Portable Document Format (PDF) fillable form in EFS-Web and on the USPTO Web site.

(5) The petition to make special must be filed at least one day prior to the date that a first Office action (which may be an Office action containing only a restriction requirement) appears in the Patent Application Information Retrieval (PAIR) system. Applicant may check the status of the application using PAIR.

(6) The petition to make special must be accompanied by a request for early publication in compliance with 37 CFR 1.219 and the publication fee set forth in 37 CFR 1.18(d).

Privacy Act Statement

The **Privacy Act of 1974 (P.L. 93-579)** requires that you be given certain information in connection with your submission of the attached form related to a patent application or patent. Accordingly, pursuant to the requirements of the Act, please be advised that: (1) the general authority for the collection of this information is 35 U.S.C. 2(b)(2); (2) furnishing of the information solicited is voluntary; and (3) the principal purpose for which the information is used by the U.S. Patent and Trademark Office is to process and/or examine your submission related to a patent application or patent. If you do not furnish the requested information, the U.S. Patent and Trademark Office may not be able to process and/or examine your submission, which may result in termination of proceedings or abandonment of the application or expiration of the patent.

The information provided by you in this form will be subject to the following routine uses:

1. The information on this form will be treated confidentially to the extent allowed under the Freedom of Information Act (5 U.S.C. 552) and the Privacy Act (5 U.S.C 552a). Records from this system of records may be disclosed to the Department of Justice to determine whether disclosure of these records is required by the Freedom of Information Act.
2. A record from this system of records may be disclosed, as a routine use, in the course of presenting evidence to a court, magistrate, or administrative tribunal, including disclosures to opposing counsel in the course of settlement negotiations.
3. A record in this system of records may be disclosed, as a routine use, to a Member of Congress submitting a request involving an individual, to whom the record pertains, when the individual has requested assistance from the Member with respect to the subject matter of the record.
4. A record in this system of records may be disclosed, as a routine use, to a contractor of the Agency having need for the information in order to perform a contract. Recipients of information shall be required to comply with the requirements of the Privacy Act of 1974, as amended, pursuant to 5 U.S.C. 552a(m).
5. A record related to an International Application filed under the Patent Cooperation Treaty in this system of records may be disclosed, as a routine use, to the International Bureau of the World Intellectual Property Organization, pursuant to the Patent Cooperation Treaty.
6. A record in this system of records may be disclosed, as a routine use, to another federal agency for purposes of National Security review (35 U.S.C. 181) and for review pursuant to the Atomic Energy Act (42 U.S.C. 218(c)).
7. A record from this system of records may be disclosed, as a routine use, to the Administrator, General Services, or his/her designee, during an inspection of records conducted by GSA as part of that agency's responsibility to recommend improvements in records management practices and programs, under authority of 44 U.S.C. 2904 and 2906. Such disclosure shall be made in accordance with the GSA regulations governing inspection of records for this purpose, and any other relevant (*i.e.*, GSA or Commerce) directive. Such disclosure shall not be used to make determinations about individuals.
8. A record from this system of records may be disclosed, as a routine use, to the public after either publication of the application pursuant to 35 U.S.C. 122(b) or issuance of a patent pursuant to 35 U.S.C. 151. Further, a record may be disclosed, subject to the limitations of 37 CFR 1.14, as a routine use, to the public if the record was filed in an application which became abandoned or in which the proceedings were terminated and which application is referenced by either a published application, an application open to public inspection or an issued patent.
9. A record from this system of records may be disclosed, as a routine use, to a Federal, State, or local law enforcement agency, if the USPTO becomes aware of a violation or potential violation of law or regulation.

IN THE UNITED STATES PATENT AND TRADEMARK OFFICE

Application No.	:	13/174,849
Inventor(s)	:	ELLENS et al.
Filing Date	:	July 1, 2011
Title	:	METHODS FOR INTEGRATED FAST PYROLYSIS PROCESSING OF BIOMASS
Attorney Docket No.	:	ABI-100
Examiner	:	Not Yet Assigned
Art Unit	:	Not Yet Assigned

STATEMENT FOR GREEN TECHNOLOGY PILOT PROGRAM

Commissioner for Patents
P.O. Box 1450
Alexandria, VA 22313-1450

Dear Sir:

Further to the accompanying Petition to Make Special Under the Green Technology Pilot Program filed herewith, please consider the statements herein.

Application No. 13/174,849
Further to Petition to Make Special Under the Green Technology Pilot Program

Statement:

With respect to the Petition to Make Special Under the Green Technology Pilot Program, which petition is filed herewith, the basis for special status is that the instant invention materially contributes to the discovery or development of renewable energy resources. The invention enables biomass, such as waste lignocellulosic materials, to be converted to liquid bio-oils as biorefinery intermediates for various renewable chemicals, materials, and fuels.

In particular, methods, process, apparatus, equipment, and systems are disclosed for converting biomass into bio-oil fractions for chemicals, materials, feedstocks and fuels using a low-cost, integrated fast pyrolysis system. The invention provides value-added fractions suitable for upgrading or extracting into value-added chemicals, fuels and water. The integrated fast pyrolysis process includes biomass storage, preparation, pretreatment, and conversion, product recovery and processing to create and store stable biochar and bio-oil fractions as part of an overall renewable fuels and chemicals system.

None of this Statement herein should be construed as any admission or estoppel that could negatively affect the scope of protection provided by the claims of the patent application. Applicant hereby reserves all rights to pursue other claims in one or more subsequent patent applications.

By this Statement, it is believed that this patent application meets all the requirements for the Green Technology Pilot Program. Early action on the merits is respectfully requested.

Respectfully Submitted,

/Ryan P. O'Connor/

_____

Ryan P. O'Connor, Reg. No. 56693

O'Connor & Company
P.O. Box 580
Minnetrista, MN 55364
Customer No. 62542

July 1, 2011

UNITED STATES PATENT AND TRADEMARK OFFICE

UNITED STATES DEPARTMENT OF COMMERCE
United States Patent and Trademark Office
Address: COMMISSIONER FOR PATENTS
P.O. Box 1450
Alexandria, Virginia 22313-1450
www.uspto.gov

APPLICATION NO.	FILING DATE	FIRST NAMED INVENTOR	ATTORNEY DOCKET NO.	CONFIRMATION NO.
13/174,849	07/01/2011	Dennis S. BANASIAK	ABI-100	1531

62542 7590 08/22/2011

OConnor & Company
P.O. Box 580
Minnetrista, MN 55364-0580

EXAMINER	
ART UNIT	PAPER NUMBER
1771	

NOTIFICATION DATE	DELIVERY MODE
08/22/2011	ELECTRONIC

Please find below and/or attached an Office communication concerning this application or proceeding.

The time period for reply, if any, is set in the attached communication.

Notice of the Office communication was sent electronically on above-indicated "Notification Date" to the following e-mail address(es):

RPO@oconnorcompanypllc.com
AEO@oconnorcompanypllc.com

UNITED STATES PATENT AND TRADEMARK OFFICE

Commissioner for Patents
United States Patent and Trademark Office
P.O. Box 1450
Alexandria, VA 22313-1450
www.uspto.gov

OConnor & Company
P.O. Box 580
Minnetrista MN 55364-0580

AUG 2 2 2011

In re Application of :
Dennis S. Banasiak et al. : DECISION ON PETITION
Application No. 13/174,849 : TO MAKE SPECIAL UNDER
Filed: July 01, 2011 : THE GREEN TECHNOLOGY
Attorney Docket No. ABI-100 : PILOT PROGRAM

This is a decision on the petition under 37 CFR 1.102, filed July 01, 2011, to make the above-identified application special under the pilot program for applications pertaining to Green Technologies as set forth in 74 Federal Register Notice 64666 (December 8, 2009) and amended by 75 Federal Register Notice 28554 (May 21, 2010) and 75 Federal Register Notice 69049 (November 10, 2010).

The petition is **GRANTED**.

A grantable petition to make an application special under 37 CFR 1.102 and the pilot program as set forth in 74 FR 64666 must be directed to a nonprovisional application filed under 35 USC 111(a) or be a national stage entry under 35 USC 371, exclusive of any reissue applications.

In order to qualify for special status, the following requirements must be met. 1) The application must have no more than 3 independent claims and no more than 20 total claims. 2) The application must not contain any multiple dependent claims. 3) The petition must state the basis for seeking special status, i.e., the claimed invention either: A) materially enhances the quality of the environment or B) materially contributes to: i) the discovery or development of renewable energy resources, ii) the more efficient utilization and conservation of energy resources, or iii) greenhouse gas emission reduction. 4) If the disclosure is not clear on its face that the claimed invention materially contributes under category (A) or (B), the petition must be accompanied by a statement by the applicant, assignee, or an attorney/agent registered to practice before the Office explaining how the materiality standard is met. 5) A statement that applicant will agree to make an election without traverse in a telephonic interview if a restriction requirement is made by the examiner. 6) The petition to make special must be filed electronically. 7) The petition must be filed at least one day prior to the date that a first Office Action appears in the Patent Application Information Retrieval (PAIR) system. 8) The petition must be accompanied by a request for early publication in compliance with 37 CFR 1.219 and include the publication fee as set forth in 37 CFR 1.18(d).

The requirement for a fee for consideration of the petition to make special for applications pertaining to Green Technologies has been waived.

The instant petition complies with items 1 – 8 above. Accordingly, the above-identified application has been accorded "special" status.

Telephone inquires concerning this decision should be directed to Blaine Copenheaver at 571-272-1156.

The application is being forwarded to the examiner for action on the merits commensurate with this decision.

/Blaine Copenheaver/

Blaine Copenheaver
Quality Assurance Specialist
Technology Center 1700

UNITED STATES PATENT AND TRADEMARK OFFICE

Commissioner for Patents
United States Patent and Trademark Office
P.O. Box 1450
Alexandria, VA 22313-1450
www.uspto.gov

VOLPE AND KOENIG, P.C.
DEPT. ICC
UNITED PLAZA
30 SOUTH 17TH STREET
PHILADELPHIA PA 19103

MAILED

SEP 30 2011

OFFICE OF PETITIONS

In re Application of:	:	
Shahrier et al.	:	
Application No. 13/174871	:	DECISION GRANTING
Filing or 371(c) Date: 07/01/2011	:	PETITION UNDER
Title of Invention:	:	37 CFR 1.47(a)
SYSTEM FOR CONTEXT TRANSFER FOR	:	
WIRELESS INTERNET DEVICES	:	

This is in response to petition pursuant to 37 CFR § 1.47(a)," filed September 15, 2011, to allow the other inventor(s) to proceed with the application on behalf of himself or herself and the nonsigning inventor.

The petition is **granted**.

The above-identified application and papers have been reviewed and found in compliance with 37 CFR 1.47(a). This application is hereby accorded Rule 1.47(a) status.

Petitioner has shown that the non-signing inventor, Sharif M. Shahrier, refuses to join in the above-identified application.

As provided in Rule 1.47(a), this Office will forward notice of this application's filing to the non-signing inventor at the addresses given in the Petition. Notice of the filing of this application will also be published in the Official Gazette.

The application file is being referred to the Office of Patent Application Processing for continued processing in the normal course of business.

Telephone inquiries related to this decision may be directed to the undersigned at (571) 272-3232.

/DLW/

Derek L. Woods
Attorney
Office of Petitions

UNITED STATES PATENT AND TRADEMARK OFFICE

Commissioner for Patents
United States Patent and Trademark Office
P.O. Box 1450
Alexandria, VA 22313-1450
www.uspto.gov

MR. SHARIF M.SHAHRIER
348 OHILIPPA PLACE
LAKE MARY, FL 32746

MAILED
SEP 30 2011
OFFICE OF PETITIONS

In re Application of:
Shahrier et al.
Application No. 13/174871 : LETTER
Filing or 371(c) Date: 07/01/2011
Title of Invention:
SYSTEM FOR CONTEXT TRANSFER FOR WIRELESS INTERNET DEVICES

Dear Mr. Shahrier:

You are named as a joint inventor in the above-identified United States patent application filed under the provisions of 35 U.S.C. 116 (United States Code) and 37 CFR 1.47(a), Rules of Practice in Patent Cases. Should a patent be granted on the application you will be designated therein as a joint inventor.

As a named inventor you are entitled to inspect any paper in the file wrapper of the application, order copies of all or any part thereof (at a prepaid cost per 37 CFR 1.19) or make your position of record in the application. Alternatively, you may arrange to do any of the preceding through a registered patent attorney or agent presenting written authorization from you. If you care to join the application, counsel of record (see below) would presumably assist you. Joining in the application would entail the filing of an appropriate oath or declaration by you pursuant to 37 CFR 1.63.

Telephone inquiries regarding this communication should be directed to the undersigned at (571) 272-3232. Requests for information regarding your application should be directed to the File Information Unit at (703) 308-2733. Information regarding how to pay for and order a copy of the application, or a specific paper in the application, should be directed to Certification Division at (703) 308-9726 or 1-800-972-6382 (outside the Washington D.C. area).

/DLW/

Derek L. Woods
Attorney
Office of Petitions

CC: VOLPE AND KOENIG, P.C.
DEPT. ICC
UNITED PLAZA
30 SOUTH 17TH STREET
PHILADELPHIA PA 19103

UNITED STATES PATENT AND TRADEMARK OFFICE

Commissioner for Patents
United States Patent and Trademark Office
P.O. Box 1450

MAILED
FEB 13 2012
OFFICE OF PETITIONS

KNOBBE MARTENS OLSON & BEAR LLP
2040 MAIN STREET
FOURTEENTH FLOOR
IRVINE CA 92614

In re Application of : DECISION ON REQUEST TO
Satoru YASUI : PARTICIPATE IN PPH PROGRAM
Application No. 13/175,118 : AND PETITION TO MAKE SPECIAL
Filed: July 1, 2011 : UNDER 37 CFR 1.102(a)
Atty. Docket No.: SUTOSH.864AUS :
For: ELECTRONIC APPARATUS AND BATTERY CONNECTOR

This is a decision on the request to participate in the Patent Prosecution Highway (PPH) program and the petition under 37 CFR 1.102(a), filed January 23, 2012 to make the above-identified application special.

The petition and request are **GRANTED**.

A grantable request to participate in the PPH (patent prosecution highway) program and petition to make special require:

(1) the U.S. application is a Paris Convention application which either validly claims priority under 35 U.S.C. 119(a) and 37 CFR 1.55 to one or more applications filed in the JPO (Japanese Patent Office) or claims priority to a PCT application that contains no priority claims. Alternatively, it can be a national stage application under the PCT which validly claims priority to an application filed in the JPO or claims priority to a PCT application that contains no priority claims. It can also be a "bypass application" filed under 35 U.S.C. 111(a) which validly claims benefit under 35 U.S.C. 120 to a PCT application, which PCT application validly claims priority to an application filed in the JPO or claims priority to a PCT application that contains no priority claims, or contains no priority claim;

(2) applicant must submit a copy of the allowable/patentable claim(s) from the JPO application(s) along with an English translation thereof and a statement that the English translation is accurate;

(3) all the claims in the U.S. application must sufficiently correspond or be amended to sufficiently correspond to the allowable/patentable claim(s) in the JPO application(s);

(4) examination of the U.S. application has not begun;

(5) applicant must submit a copy of all the office actions from each of the JPO application(s) containing the allowability/patentable claim(s) along with an English translation thereof and a statement that the English translation is accurate; and

(6) applicant must submit an IDS listing the documents cited by the JPO examiner in the JPO office action along with copies of documents except U.S. patents or U.S. patent application publications.

The request to participate in the PPH program and petition comply with the above requirements. Accordingly, the above-identified application has been accorded "special" status.

Telephone inquiries concerning this decision should be directed to Robert DeWitty, Petition Attorney, Office of Petitions at 571-272-8427.

All other inquiries concerning the examination or status of the application is accessible in the PAIR system at http://www.uspto.gov/ebc/index.html.

This application will be forwarded to Technology Center Art Unit 2833 for action commensurate with this decision.

David Bucci
Petitions Examiner
Office of Petitions

UNITED STATES PATENT AND TRADEMARK OFFICE

COMMISSIONER FOR PATENTS
UNITED STATES PATENT AND TRADEMARK OFFICE
P.O. BOX 1450
ALEXANDRIA, VA 22313-1450
www.uspto.gov

ROSENBERG, KLEIN & LEE
3458 ELLICOTT CENTER DRIVE-SUITE 101
ELLICOTT CITY MD 21043

MAILED
JUL 26 2011
OFFICE OF PETITIONS

In re Application of :
John et al. :
Application No. 13/175,187 : NOTICE
Filed: 07/01/2011 :
Attorney Docket No. MR3065-33/C :

This is a Notice regarding your request for acceptance of a fee deficiency submission under 37 CFR 1.28 filed July 7, 2011.

The Office no longer investigates or rejects original or reissue applications under 37 CFR 1.56. **1098 Off. Gaz. Pat. Office 502 (January 3, 1989)**. Therefore, nothing in this Notice is intended to imply that an investigation was done.

Your fee deficiency submission under 37 CFR 1.28 is hereby **ACCEPTED**.

This application is no longer entitled to small entity status. Accordingly, all future fees paid in this application must be paid at the large entity rate.

This application is being referred to Technology Center Art Unit 3769 for examination in due course.

Inquiries related to this communication should be directed to the undersigned at (571) 272-3211.

C. T. Donnell

Christina Tartera Donnell
Senior Petitions Attorney
Office of Petitions

UNITED STATES PATENT AND TRADEMARK OFFICE

Commissioner for Patents
United States Patent and Trademark Office
P.O. Box 1450
Alexandria, VA 22313-1450
www.uspto.gov

In re Application of
Michael L. Bazzone

Application No. 13175264

Filed: July 1,2011

Attorney Docket No. Application-1 Brillouin

:DECISION ON PETITION TO MAKE SPECIAL
:UNDER 37 CFR 1.102(c)(1)

This is a decision on the electronic petition under 37 CFR 1.102 (c)(1), filed 21-JUL-2011 to make the above-identified application special based on applicant's age as set forth in MPEP § 708.02, Section IV.

The petition is **GRANTED**.

A grantable petition to make an application special under 37 CFR 1.102(c)(1), MPEP § 708.02, Section IV: Applicant's Age must include a statement by applicant or a registered practitioner having evidence that applicant is at least 65 years of age. No fee is required.

Accordingly, the above-identified application has been accorded "special" status and will be taken up for action by the examiner upon the completion of all pre-examination processing.

Telephone inquiries concerning this electronic decision should be directed to the Electronic Business Center at 866-217-9197.

All other inquiries concerning either the examination or status of the application should be directed to the Technology Center.

Doc code : PET.OP.AGE
Description : Petition to make special based on Age/Health

PTO/SB/130 (07-09)
Approved for use through 07/31/2012. OMB 0651- 0031
U.S. Patent and Trademark Office; U.S. DEPARTMENT OF COMMERCE
Under the Paperwork Reduction Act of 1995, no persons are required to respond to a collection of information unless it contains a valid OMB control number

PETITION TO MAKE SPECIAL BASED ON AGE FOR ADVANCEMENT OF EXAMINATION UNDER 37 CFR 1.102(c)(1)

Application Information

Application Number	13175264	Confirmation Number	2272	Filing Date	2011-07-01
Attorney Docket Number (optional)	Application-1 Brillouin	Art Unit		Examiner	
First Named Inventor	Michael L. Bazzone				
Title of Invention	Generator Operation Monitoring				

Attention: Office of Petitions

An application may be made special for advancement of examination upon filing of a petition showing that the applicant is 65 years of age, or more. No fee is required with such a petition. See 37 CFR 1.102(c)(1) and MPEP 708.02 (IV).

APPLICANT HEREBY PETITIONS TO MAKE SPECIAL FOR ADVANCEMENT OF EXAMINATION IN THIS APPLICATION UNDER 37 CFR 1.102(c)(1) and MPEP 708.02 (IV) ON THE BASIS OF THE APPLICANT'S AGE.

A grantable petition requires one of the following items:
(1) Statement by one named inventor in the application that he/she is 65 years of age, or more; or
(2) Certification by a registered attorney/agent having evidence such as a birth certificate, passport, driver's license, etc. showing one named inventor in the application is 65 years of age, or more.

Name of Inventor who is 65 years of age, or older

Given Name	Middle Name	Family Name	Suffix
Michael	Louis	Bazzone	

A signature of the applicant or representative is required in accordance with 37 CFR 1.33 and 10.18.
Please see 37 CFR 1.4(d) for the format of the signature.

Select (1) or (2) :

(●) (1) I am an inventor in this application and I am 65 years of age, or more.

( ) (2) I am an attorney or agent registered to practice before the Patent and Trademark Office, and I certify that I am in possession of evidence, and will retain such in the application file record, showing that the inventor listed above is 65 years of age, or more.

Signature	/Michael L. Bazzone/	Date (YYYY-MM-DD)	2011-07-21
Name	Michael L. Bazzone		

PTO/SB/130 (07-09)
Approved for use through 07/31/2012. OMB 0651- 0031
U.S. Patent and Trademark Office; U.S. DEPARTMENT OF COMMERCE
Under the Paperwork Reduction Act of 1995, no persons are required to respond to a collection of information unless it contains a valid OMB control number

Privacy Act Statement

The Privacy Act of 1974 (P.L. 93-579) requires that you be given certain information in connection with your submission of the attached form related to a patent application or patent. Accordingly, pursuant to the requirements of the Act, please be advised that: (1) the general authority for the collection of this information is 35 U.S.C. 2(b)(2); (2) furnishing of the information solicited is voluntary; and (3) the principal purpose for which the information is used by the U.S. Patent and Trademark Office is to process and/or examine your submission related to a patent application or patent. If you do not furnish the requested information, the U.S. Patent and Trademark Office may not be able to process and/or examine your submission, which may result in termination of proceedings or abandonment of the application or expiration of the patent.

The information provided by you in this form will be subject to the following routine uses:

1. The information on this form will be treated confidentially to the extent allowed under the Freedom of Information Act (5 U.S.C. 552) and the Privacy Act (5 U.S.C. 552a). Records from this system of records may be disclosed to the Department of Justice to determine whether the Fr eedom of Information Act requires disclosure of these records.

2. A record from this system of records may be disclosed, as a routine use, in the course of presenting evidence to a court, magistrate, or administrative tribunal, including disclosures to opposing counsel in the course of settlement negotiations.

3. A record in this system of records may be disclosed, as a routine use, to a Member of Congress submitting a request involving an individual, to whom the record pertains, when the individual has requested assistance from the Member with respect to the subject matter of the record.

4. A record in this system of records may be disclosed, as a routine use, to a contractor of the Agency having need for the information in order to perform a contract. Recipients of information shall be required to comply with the requirements of the Privacy Act of 1974, as amended, pursuant to 5 U.S.C. 552a(m).

5. A record related to an International Application filed under the Patent Cooperation Treaty in this system of records may be disclosed, as a routine use, to the International Bureau of the World Intellectual Property Organization, pursuant to the Patent Cooperation Treaty.

6. A record in this system of records may be disclosed, as a routine use, to another federal agency for purposes of National Security review (35 U.S.C. 181) and for review pursuant to the Atomic Energy Act (42 U.S.C. 218(c)).

7. A record from this system of records may be disclosed, as a routine use, to the Administrator, General Services, or his/her designee, during an inspection of records conducted by GSA as part of that agency's responsibility to recommend improvements in records management practices and programs, under authority of 44 U.S.C. 2904 and 2906. Such disclosure shall be made in accordance with the GSA regulations governing inspection of records for this purpose, and any other relevant (i.e., GSA or Commerce) directive. Such disclosure shall not be used to make determinations about indivi duals.

8. A record from this system of records may be disclosed, as a routine use, to the public after either publication of the application pursuant to 35 U.S.C. 122(b) or issuance of a patent pursuant to 35 U.S.C. 151. Further, a record may be disclosed, subject to the limitations of 37 CFR 1.14, as a routine use, to the public if the record was filed in an application which became abandoned or in which the proceedings were terminated and which application is referenced by either a published application, an application open to public inspections or an issued patent.

9. A record from this system of records may be disclosed, as a routine use, to a Federal, State, or local law enforcement agency, if the USPTO becomes aware of a violation or potential violation of law or regulation.

Doc Code: PET.GREEN
Document Description: Petition for Green Tech Pilot

PTO/SB/420 (03-11)

PETITION TO MAKE SPECIAL UNDER THE GREEN TECHNOLOGY PILOT PROGRAM

Attorney Docket Number: 976-169	Application Number (if known): 13/175,399	Filing date: July 1, 2011

First Named Inventor: Nicholas P. Wynn

Title: PROCESS FOR THE PRODUCTION OF METHANOL INCLUDING ONE OR MORE MEMBRANE SEPARATION STEPS

APPLICANT HEREBY REQUESTS TO PARTICIPATE IN THE GREEN TECHNOLOGY PILOT PROGRAM FOR THE ABOVE-IDENTIFIED APPLICATION. See Instruction Sheet on page 2.

This petition must be timely filed electronically using the USPTO electronic filing system, EFS-Web.

1. By filing this petition:

   Applicant is requesting early publication: Applicant hereby requests early publication under 37 CFR 1.219 and the publication fee set forth in 37 CFR 1.18(d) accompanies this request.

2. By filing this petition: applicant is agreeing to make an election without traverse in a telephonic interview and elect an invention that meets the eligibility requirements for the Green Technology Pilot Program, if the Office determines that the claims are not obviously directed to a single invention. See Instruction Sheet.

3. This request is accompanied by statements of special status for the eligibility requirement.

4. The application contains no more than three (3) independent claims and twenty (20) total claims.

5. The application does not contain any multiple dependent claims.

6. Other attachments: _____

Signature Kathi Bean	Date 7/15/11
Name (Print/Typed) Kathi Bean	Registration Number 36,644

Note: Signatures of all the inventors or assignees of record of the entire interest or their representative(s) are required in accordance with 37 CFR 1.33 and 11.18. Please see 37 CFR 1.4(d) for the form of the signature. If necessary, submit multiple forms for more than one signature, see below.*

■ *Total of 1 forms are submitted.

If you need assistance in completing the form, call 1-800-PTO-9199 and select option 2.

IN THE UNITED STATES PATENT AND TRADEMARK OFFICE

In re the application of	: Nicholas P. Wynn et al.	Examiner:	Not yet assigned
Serial number	: 13/175,399	Group Art Unit:	1775
Filed	: July 1, 2011		
For	: PROCESS FOR THE PRODUCTION OF METHANOL INCLUDING ONE OR MORE MEMBRANE SEPARATION STEPS		

July 15, 2011

STATEMENT OF ELIGIBILITY FOR GREEN TECHNOLOGY PILOT PROGRAM

Hon. Commissioner for Patents
P.O. Box 1450
Alexandria, Virginia 22313-1450

Sir:

Applicants maintain that the subject application is eligible for accelerated examination under the Green Technology Pilot Program because the invention disclosed therein materially contributes to the reduction of greenhouse gas emissions (namely, CO_2).

The invention contributes to the reduction of carbon dioxide emissions to the environment by using carbon dioxide imported from a local source (for example, treated combustion exhaust gases generated by a coal-fired or natural-gas fired power plant) in the production of methanol. See, for example, the Abstract and Paragraphs [0016] and [0044] - [0046].

Applicants agree to make an election without traverse in a telephonic interview with the Examiner and to elect an invention that meets the eligibility requirements of the Green Technology Pilot Program should the Office determine that the claims are not directed to a single invention. A Request for a First Action Interview is submitted herewith.

The application contains two (2) independent claims, twenty (20) total claims, and no (0) multiple dependent claims.

The early publication fee under 37 CFR 1.18(d) of $ 300 is provided for on the attached Fee Transmittal form.

Applicants' agent can be reached at the telephone and fax numbers and e-mail address provided below.

Respectfully Submitted,

Kathi Bean

Kathi Bean
Registration No. 36,644
Membrane Technology and Research, Inc.
1360 Willow Road, Suite 103
Menlo Park, CA 94025
(650) 543-3370
Fax Number: (650) 328-6580
kathi.bean@mtrinc.com

I hereby certify that this correspondence is being electronically submitted to the U.S. Patent and Trademark Office on
July 15, 2011.

Jennifer Valcov

UNITED STATES PATENT AND TRADEMARK OFFICE

UNITED STATES DEPARTMENT OF COMMERCE
United States Patent and Trademark Office
Address: COMMISSIONER FOR PATENTS
P.O. Box 1450
Alexandria, Virginia 22313-1450
www.uspto.gov

APPLICATION NO.	FILING DATE	FIRST NAMED INVENTOR	ATTORNEY DOCKET NO.	CONFIRMATION NO.
13/175,399	07/01/2011	Nicholas P. Wynn	976-169	2556

26909 7590 08/30/2011

MEMBRANE TECHNOLOGY AND RESEARCH INC.
1360 WILLOW ROAD SUITE 103
MENLO PARK, CA 94025-1516

EXAMINER	
ART UNIT	PAPER NUMBER
1621	

MAIL DATE	DELIVERY MODE
08/30/2011	PAPER

Please find below and/or attached an Office communication concerning this application or proceeding.

The time period for reply, if any, is set in the attached communication.

UNITED STATES PATENT AND TRADEMARK OFFICE

Commissioner for Patents
United States Patent and Trademark Office
P.O. Box 1450
Alexandria, VA 22313-1450
www.uspto.gov

AUG 3 0 2011

MEMBRANE TECHNOLOGY AND RESEARCH INC.
1360 WILLOW ROAD SUITE 103
MENLO PARK CA 94025-1516

In re Application of :

WYNN, Nicholas *et al.*	:	DECISION ON PETITION
Application No.13/175399	:	TO MAKE SPECIAL UNDER
Filed: July 1, 2011	:	THE GREEN TECHNOLOGY
Attorney Docket No. 976-169	:	PILOT PROGRAM

This is a decision on the petition under 37 CFR 1.102, filed July 15, 2011, to make the above-identified application special under the pilot program for applications pertaining to Green Technologies as set forth in 74 Federal Register Notice 64666 (December 8, 2009) and amended by 75 Federal Register Notice 28554 (May 21, 2010) and 75 Federal Register Notice 69049 (November 10, 2010).

The petition is **GRANTED**.

A grantable petition to make an application special under 37 CFR 1.102 and the pilot program as set forth in 74 FR 64666 must be directed to a nonprovisional application filed under 35 USC 111(a) or be a national stage entry under 35 USC 371, exclusive of any reissue applications.

In order to qualify for special status, the following requirements must be met. 1) The application must have no more than 3 independent claims and no more than 20 total claims. 2) The application must not contain any multiple dependent claims. 3) The petition must state the basis for seeking special status, i.e., the claimed invention either: A) materially enhances the quality of the environment or B) materially contributes to: i) the discovery or development of renewable energy resources, ii) the more efficient utilization and conservation of energy resources, or iii) greenhouse gas emission reduction. 4) If the disclosure is not clear on its face that the claimed invention materially contributes under category (A) or (B), the petition must be accompanied by a statement by the applicant, assignee, or an attorney/agent registered to practice before the Office explaining how the materiality standard is met. 5) A statement that applicant will agree to make an election without traverse in a telephonic interview if a restriction requirement is made by the examiner. 6) The petition to make special must be filed electronically. 7) The petition must be filed at least one day prior to the date that a first Office Action appears in the Patent Application Information Retrieval (PAIR) system. 8) The petition must be accompanied by a request for early publication in compliance with 37 CFR 1.219 and include the publication fee as set forth in 37 CFR 1.18(d).

The requirement for a fee for consideration of the petition to make special for applications pertaining to Green Technologies has been waived.

The instant petition complies with items 1 – 8 above. Accordingly, the above-identified application has been accorded "special" status.

Telephone inquires concerning this decision should be directed to Manjunath Rao at 571-272-0939.

The application is being forwarded to the Technology Center Art Unit 1621 for action on the merits commensurate with this decision.

/Manjunath Rao/

Manjunath Rao
Supervisory Patent Examiner &
POC for TC 1600 Green Tech Petitions
Technology Center 1600

Attorney's Docket No.: 110466-181082 Patent
IPN: P34613

IN THE UNITED STATES PATENT AND TRADEMARK OFFICE

In the Application for:

Wendy C. Wong, et al.

Application No.: TBD

Filed: July 1, 2011

For: STOCHASTIC MANAGEMENT OF POWER CONSUMPTION BY COMPUTER SYSTEMS

Mail Stop Petition
Commissioner for Patents
PO Box 1450
Alexandria, VA 22313-1450

STATEMENT OF SPECIAL STATUS

This statement is submitted in support of the petition to make special the captioned application under the Green Technology Pilot Program. The claims of the captioned application are directed to embodiments of a single invention that among other advantages, have the substantial potential to materially enhance the quality of the environment or contribute to the more efficient utilization and conservation of energy resources, or green house gas emission reduction, through efficient management and reduction of energy consumption of computer data centers.

Respectfully submitted,

Schwabe, Williamson & Wyatt, P.C.

Dated: July 1, 2011

/Brantley C. Shumaker/
Brantley C. Shumaker
Reg. No. 56,588

Pacwest Center, Suite 1600
1211 SW Fifth Avenue
Portland, Oregon 97204
Telephone: 503-222-9981

Doc Code: PET.GREEN
Document Description: Petition for Green Tech Pilot

PTO/SB/420 (03-11)

PETITION TO MAKE SPECIAL UNDER THE GREEN TECHNOLOGY PILOT PROGRAM

Attorney Docket Number: 110466-181082	Application Number (if known):	Filing date:

First Named Inventor: Wong, Wendy C.

Title: STOCHASTIC MANAGEMENT OF POWER CONSUMPTION BY COMPUTER SYSTEMS

APPLICANT HEREBY REQUESTS TO PARTICIPATE IN THE GREEN TECHNOLOGY PILOT PROGRAM FOR THE ABOVE-IDENTIFIED APPLICATION. See Instruction Sheet on page 2.

This petition must be timely filed electronically using the USPTO electronic filing system, EFS-Web.

1. By filing this petition:

   Applicant is requesting early publication: Applicant hereby requests early publication under 37 CFR 1.219 and the publication fee set forth in 37 CFR 1.18(d) accompanies this request.

2. By filing this petition: applicant is agreeing to make an election without traverse in a telephonic interview and elect an invention that meets the eligibility requirements for the Green Technology Pilot Program, if the Office determines that the claims are not obviously directed to a single invention. See Instruction Sheet.

3. This request is accompanied by statements of special status for the eligibility requirement.

4. The application contains no more than three (3) independent claims and twenty (20) total claims.

5. The application does not contain any multiple dependent claims.

6. Other attachments: _____

Signature /Brantley Shumaker/	Date July 1, 2011
Name (Print/Typed) Brantley C. Shumaker	Registration Number 56,588

***Note**: Signatures of all the inventors or assignees of record of the entire interest or their representative(s) are required in accordance with 37 CFR 1.33 and 11.18. Please see 37 CFR 1.4(d) for the form of the signature. If necessary, submit multiple forms for more than one signature, see below*.*

☐ *Total of _____ forms are submitted.

If you need assistance in completing the form, call 1-800-PTO-9199 and select option 2.

UNITED STATES PATENT AND TRADEMARK OFFICE

UNITED STATES DEPARTMENT OF COMMERCE
United States Patent and Trademark Office
Address: COMMISSIONER FOR PATENTS
P.O. Box 1450
Alexandria, Virginia 22313-1450
www.uspto.gov

APPLICATION NO.	FILING DATE	FIRST NAMED INVENTOR	ATTORNEY DOCKET NO.	CONFIRMATION NO.
13/175,416	07/01/2011	Wendy C. Wong	110466-181082	2589

31817 7590 08/25/2011
SCHWABE, WILLIAMSON & WYATT, P.C.
PACWEST CENTER, SUITE 1900
1211 S.W. FIFTH AVE.
PORTLAND, OR 97204

EXAMINER	
ART UNIT	PAPER NUMBER
2115	

MAIL DATE	DELIVERY MODE
08/25/2011	PAPER

Please find below and/or attached an Office communication concerning this application or proceeding.

The time period for reply, if any, is set in the attached communication.

UNITED STATES PATENT AND TRADEMARK OFFICE

Commissioner for Patents
United States Patent and Trademark Office
P.O. Box 1450
Alexandria, VA 22313-1450
www.uspto.gov

SCHWABE, WILLIAMSON & WYATT, P.C.
PACWEST CENTER, SUITE 1900
1211 S.W. FIFTH AVE.
PORTLAND OR 97204

In re Application of :
WONG, Wendy et al. :
Application No. 13/175,416 :
Filed: July 1, 2011 :
For: **STOCHASTIC MANAGEMENT OF POWER CONSUMPTION BY COMPUTER SYSTEMS** :

DECISION ON PETITION TO MAKE SPECIAL UNDER THE GREEN TECHNOLOGY PILOT PROGRAM

This is a decision on the petition under 37 CFR 1.102, filed July 1, 2011, to make the above-identified application special under the pilot program for applications pertaining to Green Technologies as set forth in 74 Federal Register Notice 64666 (December 8, 2009) and amended by 75 Federal Register Notice 28554 (May 21, 2010) and 75 Federal Register Notice 69049 (November 10, 2010).

The petition is **GRANTED**.

A grantable petition to make an application special under 37 CFR 1.102 and the pilot program as set forth in 74 FR 64666 must be directed to a nonprovisional application filed under 35 USC 111(a) or be a national stage entry under 35 USC 371, exclusive of any reissue applications.

In order to qualify for special status, the following requirements must be met. 1) The application must have no more than 3 independent claims and no more than 20 total claims. 2) The application must not contain any multiple dependent claims. 3) The petition must state the basis for seeking special status, i.e., the claimed invention either: A) materially enhances the quality of the environment or B) materially contributes to: i) the discovery or development of renewable energy resources, ii) the more efficient utilization and conservation of energy resources, or iii) greenhouse gas emission reduction. 4) If the disclosure is not clear on its face that the claimed invention materially contributes under category (A) or (B), the petition must be accompanied by a statement by the applicant, assignee, or an attorney/agent registered to practice before the Office explaining how the materiality standard is met. 5) A statement that applicant will agree to make an election without traverse in a telephonic interview if a restriction requirement is made by the examiner. 6) The petition to make special must be filed electronically. 7) The petition must be filed at least one day prior to the date that a first Office Action appears in the Patent

Application Information Retrieval (PAIR) system. 8) The petition must be accompanied by a request for early publication in compliance with 37 CFR 1.219 and include the publication fee as set forth in 37 CFR 1.18(d).

The requirement for a fee for consideration of the petition to make special for applications pertaining to Green Technologies has been waived.

The instant petition complies with items 1 – 8 above. Accordingly, the above-identified application has been accorded "special" status.

The application is being forwarded to the Technology Center Art Unit 2115 for action on the merits commensurate with this decision.

Telephone inquires concerning this decision should be directed to Eddie C. Lee at 571-272-1732.

/Eddie C. Lee/

Eddie C. Lee
Quality Assurance Specialist
Technology Center 2100

UNITED STATES PATENT AND TRADEMARK OFFICE

UNITED STATES DEPARTMENT OF COMMERCE
United States Patent and Trademark Office
Address: COMMISSIONER FOR PATENTS
P.O. Box 1450
Alexandria, Virginia 22313-1450
www.uspto.gov

APPLICATION NO.	FILING DATE	FIRST NAMED INVENTOR	ATTORNEY DOCKET NO.	CONFIRMATION NO.
13/175,455	07/01/2011	Hidefumi Yoshida	1117.066362C1	2644

24978 7590 09/09/2011

GREER, BURNS & CRAIN
300 S WACKER DR
25TH FLOOR
CHICAGO, IL 60606

EXAMINER	
NGUYEN, DUNG T	
ART UNIT	PAPER NUMBER
2871	

MAIL DATE	DELIVERY MODE
09/09/2011	PAPER

Please find below and/or attached an Office communication concerning this application or proceeding.

The time period for reply, if any, is set in the attached communication.

UNITED STATES PATENT AND TRADEMARK OFFICE

Commissioner for Patents
United States Patent and Trademark Office
P.O. Box 1450
Alexandria, VA 22313-1450
www.uspto.gov

GREER, BURNS & CRAIN
300 S WACKER DR
25TH FLOOR
CHICAGO IL 60606

In re Application of
YOSHIDA et al.
Application No.: 13/175455
Filed: 01 July 2011
Attorney Docket No.: 1117.066362C1
For: LIQUID CRYSTAL DISPLAY DEVICE

: DECISION ON REQUEST TO
: PARTICIPATE IN THE PATENT
: PROSECUTION HIGHWAY
: PROGRAM AND PETITION
: TO MAKE SPECIAL UNDER
: 37 CFR 1.102(a)

This is a decision on the request to participate in the Patent Prosecution Highway (PPH) program and the petition under 37 CFR 1.102(a), filed 01 July 2011, to make the above-identified application special.

The request and petition are **GRANTED**.

Discussion

A grantable request to participate in the PPH pilot program and petition to make special require:

1. The U.S. application is

    a. a Paris Convention application which either
        i. validly claims priority under 35 U.S.C. 119(a) and 37 CFR 1.55 to one or more applications filed in the JPO, or
        ii. validly claims priority to a PCT application that contains no priority claims, or
    b. a national stage application under the PCT (an application which entered the national stage in the U.S. from a PCT international application after compliance with 35 U.S.C. 371), which PCT application
        i. validly claims priority to an application filed in the JPO, or
        ii. validly claims priority to a PCT application that contains no priority claims, or
        iii. contains no priority claim, or
    c. a so-called bypass application filed under 35 U.S.C. 111(a) which validly claims benefit under 35 U.S.C. 120 to a PCT application, which PCT application
        i. validly claims priority to an application filed in the JPO, or
        ii. validly claims priority to a PCT application that contains no priority claims, or
        iii. contains no priority claim;

2. Applicant must submit a copy of:
    a. The allowable/patentable claim(s) from the JPO application(s);
    b. An English translation of the allowable/patentable claim(s) and
    c. A statement that the English translation is accurate;
3. Applicant must:
    a. Ensure all the claims in the U.S. application must sufficiently correspond or be amended to sufficiently correspond to the allowable/patentable claim(s) in the JPO application(s) and
    b. Submit a claims correspondence table in English;
4. Examination of the U.S. application has not begun;
5. Applicant must submit:
    a. Documentation of prior office action:
        i. a copy of the office action(s) just prior to the "Decision to Grant a Patent" from each of the JPO application(s) containing the allowable/patentable claim(s) or
        ii. if the allowable/patentable claims(s) are from a "Notification of Reasons for Refusal" then the Notification of Reasons for Refusal or
        iii. if the JPO application is a first action allowance then no office action from the JPO is necessary should be indicated on the request/petition form;
    b. An English language translation of the JPO Office action from (5)(a)(i)-(ii) above
    c. A statement that the English translation is accurate;
6. Applicant must submit:
    a. An IDS listing the documents cited by the JPO examiner in the JPO office action (unless already submitted in this application)
    b. Copies of the documents except U.S. patents or U.S. patent application publications (unless already submitted in this application);

The request to participate in the PPH pilot program and petition comply with the above requirements. Accordingly, the above-identified application has been accorded "special" status.

Inquiries concerning this decision should be directed to Colleen Dunn at 571-272-1170.

All other inquiries concerning the examination or status of the application is accessible in the PAIR system at http://www.uspto.gov/ebc.index.html.

This application will be forwarded to the examiner for action on the merits commensurate with this decision once this application's formality reviews have been completed.

/Colleen Dunn/

Colleen Dunn
Quality Assurance Specialist
Technology Center 2800

Doc Code: PET.GREEN
Document Description: Petition for Green Tech Pilot

PTO/SB/420 (05-10)
Approved for use through 05/31/2010. OMB 0651-0062
U.S. Patent and Trademark Office; U. S. DEPARTMENT OF COMMERCE
Under the Paperwork Reduction Act of 1995, no persons are required to respond to a collection of information unless it displays a valid OMB control number.

PETITION TO MAKE SPECIAL UNDER THE GREEN TECHNOLOGY PILOT PROGRAM

Attorney Docket Number: 1630-0941PUS1	Application Number (if known):	Filing date: JUL 01 2011
First Named Inventor: Jinhee PARK		
Title: THIN FILM SOLAR CELL		

APPLICANT HEREBY REQUESTS TO PARTICIPATE IN THE GREEN TECHNOLOGY PILOT PROGRAM FOR THE ABOVE-IDENTIFIED APPLICATION. See Instruction Sheet on page 2.

This petition must be timely filed electronically using the USPTO electronic filing system, EFS-Web.

1. By filing this petition:

   Applicant is requesting early publication: Applicant hereby requests early publication under 37 CFR 1.219 and the publication fee set forth in 37 CFR 1.18(d) accompanies this request.

2. By filing this petition: applicant is agreeing to make an election without traverse in a telephonic interview and elect an invention that meets the eligibility requirements set forth in the notice titled "Pilot Program for Green Technologies Including Greenhouse Gas Reduction," as modified by the notice titled "Elimination of Classification Requirement in the Green Technology Pilot Program," each of which was published in the Federal Register, if the Office determines that the claims are not obviously directed to a single invention.

3. This request is accompanied by statements of special status for the eligibility requirement.

4. The application contains no more than three (3) independent claims and twenty (20) total claims.

5. The application does not contain any multiple dependent claims.

6. Other attachments: _____

Signature	Date JUL 01 2011
Name (Print/Typed) Esther H. Chong	Registration Number 40953

Note: *Signatures of all the inventors or assignees of record of the entire interest or their representative(s) are required in accordance with 37 CFR 1.33 and 11.18. Please see 37 CFR 1.4(d) for the form of the signature. If necessary, submit multiple forms for more than one signature, see below*.*

☐ *Total of _____ forms are submitted.

The information is required to obtain or retain a benefit by the public which is to file (and by the USPTO to process) an application. Confidentiality is governed by 35 U.S.C. 122 and 37 CFR 1.11 and 1.14. This collection is estimated to take 12 hours to complete, including gathering, preparing, and submitting the completed application form to the USPTO. Time will vary depending upon the individual case. Any comments on the amount of time you require to complete this form and/or suggestions for reducing this burden, should be sent to the Chief Information Officer, U.S. Patent and Trademark Office, U.S. Department of Commerce, P.O. Box 1450, Alexandria, VA 22313-1450. DO NOT SEND FEES OR COMPLETED FORMS TO THIS ADDRESS. **SEND TO: Commissioner for Patents, P.O. Box 1450, Alexandria, VA 22313-1450.**

If you need assistance in completing the form, call 1-800-PTO-9199 and select option 2.

4

Docket No.: 1630-0941PUS1
(Patent)

IN THE UNITED STATES PATENT AND TRADEMARK OFFICE

Patent Application of:
Jinhee PARK et al.

Application No.:	NEW	Confirmation No.:	
Filed:	JUL 0 1 2011	Art Unit:	Not Yet Assigned
For:	THIN FILM SOLAR CELL	Examiner:	Not Yet Assigned

STATEMENT OF SPECIAL STATUS FOR THE ELIGIBILITY REQUIREMENT UNDER THE GREEN TECHNOLOGY PILOT PROGRAM

Commissioner for Patents
P.O. Box 1450
Alexandria, VA 22313-1450

Sir:

In support of the Petition to Make Special Under the Green Technology Pilot Program, it is respectfully submitted that the basis for the requested special status is that the invention claimed in the above-identified patent application materially contributes to the development of renewable energy sources and/or green house gas emission reduction. Specifically, the claimed invention relates to a solar cell.

Additionally, by filing this petition, the applicant agrees to make an election without traverse in a telephone interview and elect an invention that meets the eligibility requirements set for in the notice titled "Pilot Program for Green Technologies Including Greenhouse Gas Reduction," as modified by the notice titled "Elimination of Classification Requirement in the Green Technology Pilot Program," each of which was published in the Federal Register, if the Office determines that the claims are not obviously directed to a single invention.

It is also submitted that this application meets the eligibility requirements to participate in the Green Technology Pilot Program, as listed in the attached Petition to Make Special Under the Green Technology Pilot Program.

Accordingly, it is respectfully requested that the Petition be granted.

Should there be any outstanding matters that need to be resolved in the present application, the Examiner is respectfully requested to contact Seth S. Kim, Reg. No. 54,577, at the telephone number of the undersigned below to conduct an interview in an effort to expedite prosecution in connection with the present application.

If necessary, the Director is hereby authorized in this, concurrent, and future replies to charge any fees required during the pendency of the above-identified application or credit any overpayment to Deposit Account No. 02-2448.

Dated: JUL 01 2011

Respectfully submitted,

By _____

Esther H. Chong
Registration No.: 40953
BIRCH, STEWART, KOLASCH & BIRCH, LLP
8110 Gatehouse Road, Suite 100 East
P.O. Box 747
Falls Church, VA 22040-0747
703-205-8000

UNITED STATES PATENT AND TRADEMARK OFFICE

UNITED STATES DEPARTMENT OF COMMERCE
United States Patent and Trademark Office
Address: COMMISSIONER FOR PATENTS
P.O. Box 1450
Alexandria, Virginia 22313-1450
www.uspto.gov

APPLICATION NO.	FILING DATE	FIRST NAMED INVENTOR	ATTORNEY DOCKET NO.	CONFIRMATION NO.
13/175,639	07/01/2011	Jinhee PARK	1630-0941PUS1	2967

2292 7590 08/01/2011
BIRCH STEWART KOLASCH & BIRCH
PO BOX 747
FALLS CHURCH, VA 22040-0747

EXAMINER	
ART UNIT	PAPER NUMBER
2879	

NOTIFICATION DATE	DELIVERY MODE
08/01/2011	ELECTRONIC

Please find below and/or attached an Office communication concerning this application or proceeding.

The time period for reply, if any, is set in the attached communication.

Notice of the Office communication was sent electronically on above-indicated "Notification Date" to the following e-mail address(es):

mailroom@bskb.com

UNITED STATES PATENT AND TRADEMARK OFFICE

Commissioner for Patents
United States Patent and Trademark Office
P.O. Box 1450
Alexandria, VA 22313-1450
www.uspto.gov

BIRCH STEWART KOLASCH & BIRCH
PO BOX 747
FALLS CHURCH VA 22040-0747

In re Application of	:	
PARK et al.	:	DECISION ON PETITION
Application No. 13/175639	:	TO MAKE SPECIAL UNDER
Filed: July 1, 2011	:	THE GREEN TECHNOLOGY
Attorney Docket No. 1630-0941PUS1	:	PILOT PROGRAM

This is a decision on the petition under 37 CFR 1.102, filed on July 1, 2011, to make the above-identified application special under the pilot program for applications pertaining to Green Technologies as set forth 74 Federal Register Notice 64666 (December 8, 2009) and amended by 75 Federal Register Notice 28554 (May 21, 2010) and 75 Federal Register Notice 69049 (November 10, 2010).

The petition is **GRANTED**.

A grantable petition to make an application special under 37 CFR 1.102 and the pilot program as set forth in 74 FR 64666 must be directed to a nonprovisional application filed under 35 USC 111(a) or be a national stage entry under 35 USC 371, exclusive of any reissue applications.

In order to qualify for special status, the following requirements must be met. 1) The application must have no more than 3 independent claims and no more than 20 total claims. 2) The application must not contain any multiple dependent claims. 3) The petition must state the basis for seeking special status, i.e., the claimed invention either: A) materially enhances the quality of the environment or B) materially contributes to: i) the discovery or development of renewable energy resources, ii) the more efficient utilization and conservation of energy resources, or iii) greenhouse gas emission reduction. 4) If the disclosure is not clear on its face that the claimed invention materially contributes under category (A) or (B), the petition must be accompanied by a statement by the applicant, assignee, or an attorney/agent registered to practice before the Office explaining how the materiality standard is met. 5) A statement that applicant will agree to make an election without traverse in a telephonic interview if a restriction requirement is made by the examiner. 6) The petition to make special must be filed electronically. 7) The petition must be filed at least one day prior to the date that a first Office Action appears in the Patent Application Information Retrieval (PAIR) system. 8) The petition must be accompanied by a request for early publication in compliance with 37 CFR 1.219 and include the publication fee as set forth in 37 CFR 1.18(d).

The requirement for a fee for consideration of the petition to make special for applications pertaining to Green Technologies has been waived.

The instant petition complies with items 1 – 8 above. Accordingly, the above-identified application has been accorded "special" status.

Telephone inquires concerning this decision should be directed to Colleen Dunn at 571-272-1170.

The application is being forwarded to the appropriate Technology Center Art Unit for action on the merits commensurate with this decision.

/Colleen Dunn/

Colleen Dunn
Quality Assurance Specialist
Technology Center 2800

UNITED STATES PATENT AND TRADEMARK OFFICE

UNITED STATES DEPARTMENT OF COMMERCE
United States Patent and Trademark Office
Address: COMMISSIONER FOR PATENTS
P.O. Box 1450
Alexandria, Virginia 22313-1450
www.uspto.gov

APPLICATION NO.	FILING DATE	FIRST NAMED INVENTOR	ATTORNEY DOCKET NO.	CONFIRMATION NO.
13/175,696	07/01/2011	Katsunari UEMURA	5132-0134PUS3	3066

2292 7590 07/26/2011
BIRCH STEWART KOLASCH & BIRCH
PO BOX 747
FALLS CHURCH, VA 22040-0747

EXAMINER	
ART UNIT	PAPER NUMBER
2473	

NOTIFICATION DATE	DELIVERY MODE
07/26/2011	ELECTRONIC

Please find below and/or attached an Office communication concerning this application or proceeding.

The time period for reply, if any, is set in the attached communication.

Notice of the Office communication was sent electronically on above-indicated "Notification Date" to the following e-mail address(es):

mailroom@bskb.com

UNITED STATES PATENT AND TRADEMARK OFFICE

Commissioner for Patents
United States Patent and Trademark Office
P.O. Box 1450
Alexandria, VA 22313-1450
www.uspto.gov

BIRCH STEWART KOLASCH & BIRCH
PO BOX 747
FALLS CHURCH VA 22040-0747

In re Application of: Uemura et al.
Application No. 13/175696
Filed: 07/01/11
For: METHOD FOR CONNECTING MOBILE STATION TO BASE STATION, MOBILE STATION, BASE STATION, MULTI-CARRIER MOBILE COMMUNICATION SYSTEM, AND RANDOM ACCESS CHANNEL MAPPING METHOD

DECISION ON REQUEST TO PARTICIPATE IN PATENT PROSECUTION HIGHWAY PROGRAM AND PETITION TO MAKE SPECIAL UNDER 37 CFR 1.102(d)

This is a decision on the request to participate in the Patent Prosecution Highway (PPH) program and the petition under 37 CFR 1.102(d), filed July 1, 2011, to make the above-identified application special.

The petition is **GRANTED.**

A grantable request to participate in the PPH program and petition to make special require:

(1) The U.S. application must validly claim priority under 35 U.S.C. 119(a) to one or more applications filed in the JPO;

(2) Applicant must submit a copy of the allowable/patentable claim(s) from the JPO application(s) along with an English translation thereof and a statement that the English translation is accurate;

(3) All the claims in the U.S. application must sufficiently correspond or be amended to sufficiently correspond to the allowable/patentable claim(s) in the JPO application(s);

(4) Examination of the U.S. application has not begun;

(5) Applicant must submit a copy of all the office actions from each of the JPO application(s) containing the allowable/patentable claim(s) along with an English translation thereof and a statement that the English translation is accurate;
(6) Applicant must submit an IDS listing the documents cited by the JPO examiner in the KIPO office action along with copies of documents except U.S. patents or U.S. patent application publications; and

(7) The required petition fee under 37 CFR 1.17(h) if filed before May 25, 2010.

The request to participate in the PPH program and petition are found to comply with all the above requirements. Accordingly, the above-identified application has been accorded "special" status.

Telephone inquiries concerning this decision should be directed to Tod Swann at 571-272-3612.

All other inquiries concerning the examination or status of the application is accessible in the PAIR system at http://www.uspto.gov/ebc/index.html.

The application is being forwarded to the examiner for action on the merits commensurate with this decision.

___/Tod Swann/_____
Tod Swann
Quality Assurance Specialist
Technology Center 2400

Doc Code: PET.GREEN
Document Description: Petition for Green Tech Pilot

PTO/SB/420 (03-11)

PETITION TO MAKE SPECIAL UNDER THE GREEN TECHNOLOGY PILOT PROGRAM

Attorney Docket Number: P37213	Application Number (if known):	Filing date: July 1, 2011

First Named Inventor: Maciocco

Title: System and Method for Maintaining Connectivity to Remote Application Servers

APPLICANT HEREBY REQUESTS TO PARTICIPATE IN THE GREEN TECHNOLOGY PILOT PROGRAM FOR THE ABOVE-IDENTIFIED APPLICATION. See Instruction Sheet on page 2.

This petition must be timely filed electronically using the USPTO electronic filing system, EFS-Web.

1. By filing this petition:

   Applicant is requesting early publication: Applicant hereby requests early publication under 37 CFR 1.219 and the publication fee set forth in 37 CFR 1.18(d) accompanies this request.

2. By filing this petition: applicant is agreeing to make an election without traverse in a telephonic interview and elect an invention that meets the eligibility requirements for the Green Technology Pilot Program, if the Office determines that the claims are not obviously directed to a single invention. See Instruction Sheet.

3. This request is accompanied by statements of special status for the eligibility requirement.

4. The application contains no more than three (3) independent claims and twenty (20) total claims.

5. The application does not contain any multiple dependent claims.

6. Other attachments: _____

Signature /Paul J. Kroon, Jr./	Date July 1, 2011
Name (Print/Typed) Paul J. Kroon, Jr.	Registration Number 51902

Note: *Signatures of all the inventors or assignees of record of the entire interest or their representative(s) are required in accordance with 37 CFR 1.33 and 11.18. Please see 37 CFR 1.4(d) for the form of the signature. If necessary, submit multiple forms for more than one signature, see below*.*

☐ *Total of _____ forms are submitted.

If you need assistance in completing the form, call 1-800-PTO-9199 and select option 2.

Instruction Sheet for
Petition to Make Special Under the Green Technology Pilot Program

(Not to be Submitted to the USPTO)

The following is a summary of the requirements (for more information see the notices (i) "Pilot Program for Green Technologies Including Greenhouse Gas Reduction," (ii) "Elimination of Classification Requirement in the Green Technology Pilot Program," and (iii) "Expansion and Extension of the Green Technology Pilot Program," available on the USPTO web site at http://www.uspto.gov/patents/init_events/green_tech.jsp):

(1) The application must be a non-reissue, non-provisional utility application filed under 35 U.S.C. 111(a), or an international application that has entered the national stage in compliance with 35 U.S.C. 371, irrespective of the filing date of the application. Reexamination proceedings are excluded from this pilot program.

(2) The application must contain three or fewer independent claims and twenty or fewer total claims. The application must not contain any multiple dependent claims. For an application that contains more than three independent claims or twenty total claims, or multiple dependent claims, applicant must file a preliminary amendment in compliance with 37 CFR 1.121 to cancel the excess claims and/or the multiple dependent claims at the time the petition to make special is filed.

(3) The claims must be directed to a single invention that materially enhances the quality of the environment, or that materially contributes to: (1) the discovery or development of renewable energy resources; (2) the more efficient utilization and conservation of energy resources; or (3) green house gas emission reduction (see the eligibility requirements of sections II and III of the notice (i) cited above). The petition must include a statement that, if the USPTO determines that the claims are directed to multiple inventions (e.g., in a restriction requirement), applicant will agree to make an election without traverse in a telephonic interview, and elect an invention that meets the eligibility requirements in section II or III of the notice (i) cited above.

(4) The petition to make special must be timely filed electronically using the USPTO electronic filing system, EFS-Web, and selecting the document description of "Petition for Green Tech Pilot" on the EFS-Web screen. Applicant should use form PTO/SB/420, which is available as a Portable Document Format (PDF) fillable form in EFS-Web and on the USPTO Web site.

(5) The petition to make special must be filed at least one day prior to the date that a first Office action (which may be an Office action containing only a restriction requirement) appears in the Patent Application Information Retrieval (PAIR) system. Applicant may check the status of the application using PAIR.

(6) The petition to make special must be accompanied by a request for early publication in compliance with 37 CFR 1.219 and the publication fee set forth in 37 CFR 1.18(d).

Privacy Act Statement

The **Privacy Act of 1974 (P.L. 93-579)** requires that you be given certain information in connection with your submission of the attached form related to a patent application or patent. Accordingly, pursuant to the requirements of the Act, please be advised that: (1) the general authority for the collection of this information is 35 U.S.C. 2(b)(2); (2) furnishing of the information solicited is voluntary; and (3) the principal purpose for which the information is used by the U.S. Patent and Trademark Office is to process and/or examine your submission related to a patent application or patent. If you do not furnish the requested information, the U.S. Patent and Trademark Office may not be able to process and/or examine your submission, which may result in termination of proceedings or abandonment of the application or expiration of the patent.

The information provided by you in this form will be subject to the following routine uses:

1. The information on this form will be treated confidentially to the extent allowed under the Freedom of Information Act (5 U.S.C. 552) and the Privacy Act (5 U.S.C 552a). Records from this system of records may be disclosed to the Department of Justice to determine whether disclosure of these records is required by the Freedom of Information Act.
2. A record from this system of records may be disclosed, as a routine use, in the course of presenting evidence to a court, magistrate, or administrative tribunal, including disclosures to opposing counsel in the course of settlement negotiations.
3. A record in this system of records may be disclosed, as a routine use, to a Member of Congress submitting a request involving an individual, to whom the record pertains, when the individual has requested assistance from the Member with respect to the subject matter of the record.
4. A record in this system of records may be disclosed, as a routine use, to a contractor of the Agency having need for the information in order to perform a contract. Recipients of information shall be required to comply with the requirements of the Privacy Act of 1974, as amended, pursuant to 5 U.S.C. 552a(m).
5. A record related to an International Application filed under the Patent Cooperation Treaty in this system of records may be disclosed, as a routine use, to the International Bureau of the World Intellectual Property Organization, pursuant to the Patent Cooperation Treaty.
6. A record in this system of records may be disclosed, as a routine use, to another federal agency for purposes of National Security review (35 U.S.C. 181) and for review pursuant to the Atomic Energy Act (42 U.S.C. 218(c)).
7. A record from this system of records may be disclosed, as a routine use, to the Administrator, General Services, or his/her designee, during an inspection of records conducted by GSA as part of that agency's responsibility to recommend improvements in records management practices and programs, under authority of 44 U.S.C. 2904 and 2906. Such disclosure shall be made in accordance with the GSA regulations governing inspection of records for this purpose, and any other relevant (*i.e.*, GSA or Commerce) directive. Such disclosure shall not be used to make determinations about individuals.
8. A record from this system of records may be disclosed, as a routine use, to the public after either publication of the application pursuant to 35 U.S.C. 122(b) or issuance of a patent pursuant to 35 U.S.C. 151. Further, a record may be disclosed, subject to the limitations of 37 CFR 1.14, as a routine use, to the public if the record was filed in an application which became abandoned or in which the proceedings were terminated and which application is referenced by either a published application, an application open to public inspection or an issued patent.
9. A record from this system of records may be disclosed, as a routine use, to a Federal, State, or local law enforcement agency, if the USPTO becomes aware of a violation or potential violation of law or regulation.

IN THE UNITED STATES PATENT AND TRADEMARK OFFICE

Applicant: Maciocco et al. Docket: P37213

Filed: July 1, 2011

Title: **SYSTEM AND METHOD FOR MAINTAINING CONNECTIVITY TO REMOTE APPLICATION SERVERS**

STATEMENT IN SUPPORT OF PETITION TO MAKE SPECIAL UNDER THE GREEN TECHNOLOGY PILOT PROGRAM

Commissioner for Patents
P.O. Box 1450
Alexandria, VA 22313-1450

Dear Sir:

BASIS FOR SPECIAL STATUS

Special status under the Green Technology Pilot program is sought because the claimed subject matter of this Application materially contributes to the more efficient utilization and conservation of energy resources. Further, the claimed subject matter of this Application materially enhances the quality of the environment through energy conservation.

HOW THE MATERIALITY STANDARD IS MET

The claimed subject matter of this Application is directed a system, apparatus, and computer readable non-transitory medium for increasing the energy efficiency of a client platform (such as, but not limited to, desktop, a laptop, and/or a mobile computing device) by allowing the client platform to remain in a low power state (e.g., the S3 state as defined by the Advanced Configuration and Power Interface (ACPI) specification) while still maintaining connectivity and presence with a remote application server. A previous approach for maintaining connection and presence with a remote application server involves periodically transitioning the client platform from the low power state to an active power state (e.g., the S0 state as defined by the ACPI specification) so that the client platform may transmit presence data to the application server and/or receive any other data. Unfortunately, this approach

requires a significant amount of energy as the entire platform is toggled between low power state and full power states. Additionally, the periodic toggling between the low power state and full power states may have a negative impact on reliability of the low power-to-full power state transition.

The apparatus, method and system as presently claimed in this Application materially improves energy efficiency by eliminating the need to toggle between low power state and full power states in order to maintain connectivity and presence with a remote application server. In particular, the claimed subject matter of this Application periodically transmits keep-alive messages to the remote application server while the client platform remains in the low-power state to maintain connectivity and presence with the remote application server. As such, a client platform consistent with the claimed invention may remain in a low power state while maintaining connectivity and presence with the remote application server. The claimed subject matter of the instant Application materially therefore contributes to the more efficient utilization and conservation of energy resources by eliminating the need for the client platform to toggle between low power state and full power states, reducing the overall power consumption of the client platform, and increasing the battery life of the client platform.

The Commissioner is hereby authorized to charge fees associated with this communication or credit any overpayment to Deposit Account No.: 50-4238.

Please direct all correspondence concerning the above-identified application to the address associated with customer number: **45459**

Respectfully submitted,

By: /Paul J. Kroon, Jr./
Paul J. Kroon, Jr.
Reg. No. 51902

UNITED STATES PATENT AND TRADEMARK OFFICE

UNITED STATES DEPARTMENT OF COMMERCE
United States Patent and Trademark Office
Address: COMMISSIONER FOR PATENTS
P.O. Box 1450
Alexandria, Virginia 22313-1450
www.uspto.gov

APPLICATION NO.	FILING DATE	FIRST NAMED INVENTOR	ATTORNEY DOCKET NO.	CONFIRMATION NO.
13/175,757	07/01/2011	Christian Maciocco	P37213	3192

45459 7590 10/26/2011

GROSSMAN, TUCKER, PERREAULT & PFLEGER, PLLC
c/o CPA Global
P. O. BOX 52050
MINNEAPOLIS, MN 55402

EXAMINER	
ART UNIT	PAPER NUMBER
2115	

NOTIFICATION DATE	DELIVERY MODE
10/26/2011	ELECTRONIC

Please find below and/or attached an Office communication concerning this application or proceeding.

The time period for reply, if any, is set in the attached communication.

Notice of the Office communication was sent electronically on above-indicated "Notification Date" to the following e-mail address(es):

drobertson@gtpp.com
docketing@intellevate.com
AMorell@cpaglobal.com

UNITED STATES PATENT AND TRADEMARK OFFICE

Commissioner for Patents
United States Patent and Trademark Office
P.O. Box 1450
Alexandria, VA 22313-1450
www.uspto.gov

GROSSMAN, TUCKER, PERREAULT & PFLEGER, PLLC
c/o CPA Global
P. O. BOX 52050
MINNEAPOLIS MN 55402

In re Application of :
MACIOCCO, Christian et al. :
Application No. 13/175,757 :
Filed: July 1, 2011 :
For: **SYSTEM AND METHOD FOR MAINTAINING CONNECTIVITY TO REMOTE APPLICATION SERVERS** :

DECISION ON PETITION TO MAKE SPECIAL UNDER THE GREEN TECHNOLOGY PILOT PROGRAM

This is a decision on the petition under 37 CFR 1.102, filed July 1, 2011, to make the above-identified application special under the pilot program for applications pertaining to Green Technologies as set forth in 74 Federal Register Notice 64666 (December 8, 2009) and amended by 75 Federal Register Notice 28554 (May 21, 2010) and 75 Federal Register Notice 69049 (November 10, 2010).

The petition is **GRANTED**.

A grantable petition to make an application special under 37 CFR 1.102 and the pilot program as set forth in 74 FR 64666 must be directed to a nonprovisional application filed under 35 USC 111(a) or be a national stage entry under 35 USC 371, exclusive of any reissue applications.

In order to qualify for special status, the following requirements must be met. 1) The application must have no more than 3 independent claims and no more than 20 total claims. 2) The application must not contain any multiple dependent claims. 3) The petition must state the basis for seeking special status, i.e., the claimed invention either: A) materially enhances the quality of the environment or B) materially contributes to: i) the discovery or development of renewable energy resources, ii) the more efficient utilization and conservation of energy resources, or iii) greenhouse gas emission reduction. 4) If the disclosure is not clear on its face that the claimed invention materially contributes under category (A) or (B), the petition must be accompanied by a statement by the applicant, assignee, or an attorney/agent registered to practice before the Office explaining how the materiality standard is met. 5) A statement that applicant will agree to make an election without traverse in a telephonic interview if a restriction requirement is made by the examiner. 6) The petition to make special must be filed electronically. 7) The petition

must be filed at least one day prior to the date that a first Office Action appears in the Patent Application Information Retrieval (PAIR) system. 8) The petition must be accompanied by a request for early publication in compliance with 37 CFR 1.219 and include the publication fee as set forth in 37 CFR 1.18(d).

The requirement for a fee for consideration of the petition to make special for applications pertaining to Green Technologies has been waived.

The instant petition complies with items 1 – 8 above. Accordingly, the above-identified application has been accorded "special" status.

The application is being forwarded to the Technology Center Art Unit 2121 for action on the merits commensurate with this decision.

Telephone inquires concerning this decision should be directed to Eddie C. Lee at 571-272-1732.

/Eddie C. Lee/

Quality Assurance Specialist
Technology Center 2100

Doc Code: PPH.PCT.652

Document Description: Petition to make special under PCT-Patent Pros Hwy

PTO/SB/20PCT-KR (06-10)
Approved for use through 01/31/2015. OMB 0651-0058
U.S. Patent and Trademark Office; U.S DEPARTMENT OF COMMERCE
Under the Paperwork Reduction Act of 1995, no persons are required to respond to a collection of information unless it displays a valid OMB control number.

REQUEST FOR PARTICIPATION IN THE PATENT COOPERATION TREATY – PATENT PROSECUTION HIGHWAY (PCT-PPH) PILOT PROGRAM BETWEEN THE KOREAN INTELLECTUAL PROPERTY OFFICE (KIPO) AND THE USPTO

Application No.:	13/175,774	First Named Inventor:	Karthik Yogeeswaran
Filing Date:	July 1, 2011	Attorney Docket No.:	0313985 (Belkin 2)
Title of the Invention:	System for Monitoring Electrical Power Usage of a Structure and Method of Same		

THIS REQUEST FOR PARTICIPATION IN THE PCT-PPH PILOT PROGRAM ALONG WITH THE REQUIRED DOCUMENTS MUST BE SUBMITTED VIA EFS-WEB. INFORMATION REGARDING EFS-WEB IS AVAILABLE AT HTTP://WWW.USPTO.GOV/EBC/EFS_HELP.HTML.

APPLICANT HEREBY REQUESTS PARTICIPATION IN THE PCT-PPH PILOT PROGRAM AND PETITIONS TO MAKE THE ABOVE-IDENTIFIED APPLICATION SPECIAL UNDER THE PCT-PPH PILOT PROGRAM.

The above-identified application is (1) a national stage entry of the corresponding PCT application, or (2) a national stage entry of another PCT application which claims priority to the corresponding PCT application, or (3) a national application that claims domestic/ foreign priority to the corresponding PCT application, or (4) a national application which forms the basis for the priority claim in the corresponding PCT application, or (5) a continuing application of a U.S. application that satisfies one of (1) to (4) above, or (6) a U.S. application that claims domestic benefit to a U.S. provisional application which forms the basis for the priority claim in the corresponding PCT application.

The corresponding PCT application number(s) is/are: PCT/2011/042877

The international filing date of the corresponding PCT application(s) is/are: July 1, 2011

I. List of Required Documents:

a. **A copy of the latest international work product (WO/ISA, WO/IPEA, or IPER) in the above-identified corresponding PCT application(s)**

☐ is attached.

☑ is not attached because the document is already in the U.S. application.

b. **A copy of all claims which were indicated as having novelty, inventive step and industrial applicability in the above-identified corresponding PCT application(s)**

☑ is attached.

☐ is not attached because the document is already in the U.S. application.

c. **English translations of the documents in a. and b. above are attached (if the documents are not in the English language). A statement that the English translation is accurate is attached for the document in b. above.**

d. **(1) An information disclosure statement listing the documents cited in the international work products (ISR, WO/ISA, WO/IPEA, IPER) of the corresponding PCT application.**

☐ is attached.

☑ has already been filed in the above-identified U.S. application on March 5, 2012

(2) Copies of all documents (except for U.S. patents or U.S. patent application publications)

☐ are attached.

☑ have already been filed in the above-identified U.S. application on March 5, 2012

This collection of information is required by 35 U.S.C. 119, 37 CFR 1.55, and 37 CFR 1.102(d). The information is required to obtain or retain a benefit by the public, which is to file (and by the USPTO to process) an application. Confidentiality is governed by 35 U.S.C. 122 and 37 CFR 1.11 and 1.14. This collection is estimated to take 2 hours to complete, including gathering, preparing, and submitting the completed application form to the USPTO. Time will vary depending upon the individual case. Any comments on the amount of time you require to complete this form and/or suggestions for reducing this burden should be sent to the Chief Information Officer, U.S. Patent and Trademark Office, U.S. Department of Commerce, P.O. Box 1450, Alexandria, VA 22313-1450. DO NOT SEND FEES OR COMPLETED FORMS TO THIS ADDRESS.

PTO/SB/20PCT-KR (06-10)
Approved for use through 01/31/2015. OMB 0651-0058
U.S. Patent and Trademark Office; U.S DEPARTMENT OF COMMERCE
Under the Paperwork Reduction Act of 1995, no persons are required to respond to a collection of information unless it displays a valid OMB control number.

REQUEST FOR PARTICIPATION IN THE PCT-PPH PILOT PROGRAM BETWEEN THE KIPO AND THE USPTO

(continued)

Application No.:	13/175,774	First Named Inventor:	Karthik Yogeeswaran

II. Claims Correspondence Table:

Claims in US Application	Patentable Claims in the corresponding PCT application	Explanation regarding the correspondence
1-5	1-5	identical except multi-dependency of claim 4 removed
10,21,22,23	14-17	identical except multi-dependency of claim 17 removed
14-17	24-27	identical except multi-dependency of claim 27 removed
20 and 24	30-31	identical
6-9 and11-13	1	claims 6-9 and 11-13 depend from and are narrower in scope than claim 1
		and are supported by the written description in both applications
18-19	15	claims 18-19 depend from and are narrower in scope than claim 15
		and are supported by the written description in both applications

III. All the claims in the US application sufficiently correspond to the patentable claims in the corresponding PCT application.

Signature /Walter P. Opaska/	Date March 6, 2012
Name (Print/Typed) Walter P. Opaska	Registration Number 54,349

Privacy Act Statement

The **Privacy Act of 1974 (P.L. 93-579)** requires that you be given certain information in connection with your submission of the attached form related to a patent application or patent. Accordingly, pursuant to the requirements of the Act, please be advised that: (1) the general authority for the collection of this information is 35 U.S.C. 2(b)(2); (2) furnishing of the information solicited is voluntary; and (3) the principal purpose for which the information is used by the U.S. Patent and Trademark Office is to process and/or examine your submission related to a patent application or patent. If you do not furnish the requested information, the U.S. Patent and Trademark Office may not be able to process and/or examine your submission, which may result in termination of proceedings or abandonment of the application or expiration of the patent.

The information provided by you in this form will be subject to the following routine uses:

1. The information on this form will be treated confidentially to the extent allowed under the Freedom of Information Act (5 U.S.C. 552) and the Privacy Act (5 U.S.C 552a). Records from this system of records may be disclosed to the Department of Justice to determine whether disclosure of these records is required by the Freedom of Information Act.
2. A record from this system of records may be disclosed, as a routine use, in the course of presenting evidence to a court, magistrate, or administrative tribunal, including disclosures to opposing counsel in the course of settlement negotiations.
3. A record in this system of records may be disclosed, as a routine use, to a Member of Congress submitting a request involving an individual, to whom the record pertains, when the individual has requested assistance from the Member with respect to the subject matter of the record.
4. A record in this system of records may be disclosed, as a routine use, to a contractor of the Agency having need for the information in order to perform a contract. Recipients of information shall be required to comply with the requirements of the Privacy Act of 1974, as amended, pursuant to 5 U.S.C. 552a(m).
5. A record related to an International Application filed under the Patent Cooperation Treaty in this system of records may be disclosed, as a routine use, to the International Bureau of the World Intellectual Property Organization, pursuant to the Patent Cooperation Treaty.
6. A record in this system of records may be disclosed, as a routine use, to another federal agency for purposes of National Security review (35 U.S.C. 181) and for review pursuant to the Atomic Energy Act (42 U.S.C. 218(c)).
7. A record from this system of records may be disclosed, as a routine use, to the Administrator, General Services, or his/her designee, during an inspection of records conducted by GSA as part of that agency's responsibility to recommend improvements in records management practices and programs, under authority of 44 U.S.C. 2904 and 2906. Such disclosure shall be made in accordance with the GSA regulations governing inspection of records for this purpose, and any other relevant (*i.e.*, GSA or Commerce) directive. Such disclosure shall not be used to make determinations about individuals.
8. A record from this system of records may be disclosed, as a routine use, to the public after either publication of the application pursuant to 35 U.S.C. 122(b) or issuance of a patent pursuant to 35 U.S.C. 151. Further, a record may be disclosed, subject to the limitations of 37 CFR 1.14, as a routine use, to the public if the record was filed in an application which became abandoned or in which the proceedings were terminated and which application is referenced by either a published application, an application open to public inspection or an issued patent.
9. A record from this system of records may be disclosed, as a routine use, to a Federal, State, or local law enforcement agency, if the USPTO becomes aware of a violation or potential violation of law or regulation.

SYSTEM FOR MONITORING ELECTRICAL POWER USAGE OF A STRUCTURE AND METHOD OF SAME

PCT Claims for PCT/US2011/042877 which indicated as having Novelty, Innovative Step and Industrial Application.

CLAIMS

What is claimed is:

1. A system for monitoring usage of electrical power by a structure, the structure having one or more main electrical power lines that supply the electrical power to a first load in the structure, a portion of the one or more main electrical power lines run substantially parallel to a first axis, the structure further having a panel that overlies the portion of the one or more main electrical power lines, the system comprising:

a current sensor unit configured to be coupled to a portion of a surface of the panel, the current sensor unit comprising:

at least one magnetic field sensor having a length substantially parallel to a second axis, wherein the second axis is substantially perpendicular to the first axis, and the at least one magnetic field sensor is configured to detect a magnetic field generated by the one or more main electrical power lines; and

a processing unit configured to run on a processor,

wherein:

the current sensor unit is configured to produce an output signal based on the magnetic field detected by the at least one magnetic field sensor; and

the processing unit further is configured to receive the output signal from the current sensor unit and process the output signal to determine one or more parameters related to the usage of the electrical power by the first load in the structure.

2. The system of claim 1, wherein:

the second axis is also substantially perpendicular to the portion of the surface of the panel; and

at least part of the portion of the surface of the panel overlies the portion of the one or more main electrical power lines.

3. The system of claim 1, wherein:

the second axis is also substantially parallel to the portion of the surface of the panel; and

at least part of the portion of the surface of the panel overlies the portion of the one or more main electrical power lines.

4. The system of one of claim 1, 2, or 3, wherein:

the at least one magnetic field sensor comprises:

a first magnetic field sensor comprising:

a first core; and

a first conductor wrapped around the first core in a first direction; and

a second magnetic field sensor comprising:

a second core; and

a second conductor wrapped around the second core in a second direction; and

the second direction is opposite the first direction.

5. The system of claim 4, wherein:

the first direction is clockwise; and

the second direction is counter-clockwise.

14. An apparatus for measuring electrical current in one or more main electrical power lines of a structure, the structure having a breaker box, the breaker box comprising at least a first part of the one or more main electrical power lines and a metal panel over the first part of the one or more main electrical power lines, the apparatus comprising:

a sensing device comprising:

one or more electrical current sensors configured to provide two or more current measurements; and

one or more magnets coupled to the one or more electrical current sensors; and

a processing module configured to run on a computational unit and configured to use the two or more current measurements to determine the electrical current in the one or more main electrical power lines.

14. An apparatus for measuring electrical current in one or more main electrical power lines of a structure, the structure having a breaker box, the breaker box comprising at least a first part of the one or more main electrical power lines and a metal panel over the first part of the one or more main electrical power lines, the apparatus comprising:

a sensing device comprising:

one or more electrical current sensors configured to provide two or more current measurements; and

one or more magnets coupled to the one or more electrical current sensors; and

a processing module configured to run on a computational unit and configured to use the two or more current measurements to determine the electrical current in the one or more main electrical power lines.

15. The apparatus of claim 14, wherein:

each of the one or more electrical current sensors comprise:

a first side; and

a second side opposite the first side;

a first axis extends from the first side to the second side of each of the one or more electrical current sensors; and

each of the first axes are perpendicular to a portion of a length of the first part of the one or more main electrical power lines.

16. The apparatus of claim 15, wherein:

each of the first axes are also perpendicular to at least part of an exterior side of the metal panel.

17. The apparatus of one of claim 15 or 16, wherein:

the first side of each of the one or more electrical current sensors is coupled to the one or more magnets; and

the second side of each of the one or more electrical current sensors is spaced apart from the one or more magnets.

24. A method for providing a system for monitoring usage of electrical power of a structure, the structure having one or more main electrical power lines that supply the electrical power to a first load in the structure, the one or more main electrical power lines at least partially run substantially parallel to a first axis, the structure further having a panel that overlies at least part of the one or more main electrical power lines, the method comprising:

providing a current sensor unit configured to be coupled to a surface of the panel, the current sensor unit configured to produce an output signal based on a magnetic field generated by the one or more main electrical power lines; and

providing a processing unit configured to receive the output signal from the current sensor unit and further configured to process the output signal to determine one or more parameters related to the usage of the electrical power of the structure,

wherein:

providing the current sensor unit comprises:

providing at least one magnetic field sensor with a length along a second axis, wherein the at least one magnetic field sensor is configured to detect the magnetic field generated by the one or more main electrical power lines; and

mounting the at least one magnetic field sensor at the current sensor unit such that the second axis of the at least one magnetic field sensor is substantially perpendicular to the first axis when the current sensor unit is coupled to the surface of the panel.

25. The method of claim 24, wherein:

mounting the at least one magnetic field sensor further comprises:

mounting the at least one magnetic field sensor at the current sensor unit such that the second axis of the at least one magnetic field sensor is substantially perpendicular to the first axis and substantially perpendicular to at least part of the surface of the panel when the current sensor unit is coupled to the surface of the panel.

26. The method of claim 24, wherein:

mounting the at least one magnetic field sensor further comprises:

mounting the at least one magnetic field sensor at the current sensor unit such that the second axis of the at least one magnetic field sensor is substantially perpendicular to the first axis and is substantially parallel to at least part of the surface of the panel when the current sensor unit is coupled to the surface of the panel.

27. The method of one of claim 24, 25 or 26, wherein:

providing the at least one magnetic field sensor further comprises:

providing the at least one magnetic field sensor with a first end and a second end opposite the first end, the second axis extends from the first end to the second end; and

providing the current sensor unit comprises:

providing at least one magnet coupled to a first end of the at least one magnetic field sensor.

30. A method for monitoring usage of electrical power of a structure using an electrical power monitoring system, the structure having one or more main electrical power lines that supply the electrical power to a first load in the structure, the method comprising:

calibrating the electrical power monitoring system, wherein a first raw current in the one or more main electrical power lines and first calibration data are generated while calibrating the electrical power monitor system;

storing the first calibration data and a measurement of the first raw current;

measuring a second raw current;

if the second raw current is not within a predetermined amount of the first raw current, performing a first recalibration of the electrical power monitoring system comprising:

calibrating the electrical power monitoring system, wherein a third raw current in the one or more main electrical power lines and second calibration data are generated while performing the first recalibration of the electrical power monitor system;

storing the second calibration data and a measurement of the third raw current; and

calculating a first measured current using the second calibration data; and

if the second raw current is within the predetermined amount of the first raw current, calculating the first measured current using the first calibration data; and

displaying the first measured current.

31.The method of claim 30, further comprising:

measuring a fourth raw current;

if the third raw current is not within the predetermined amount of the first raw current or the second raw current, performing a second recalibration of the electrical power monitoring system comprising:

calibrating the electrical power monitoring system, wherein a fifth raw current in the one or more main electrical power lines and third calibration data are generated while performing the second recalibration of the electrical power monitor system;

storing the third calibration data and a measurement of the fifth raw current; and

calculating a second measured current using the third calibration data;

if the third raw current is within the predetermined amount of the first raw current or the second raw current, calculating the second measured current using the first calibration data or the second calibration data; and

displaying the second measured current.

IN THE UNITED STATES PATENT OFFICE

Title: **APPARATUS AND PROCESS FOR DESALINATION OF BRACKISH WATER**

Inventor: **Saad A. Al-Jlil**

Filing Date: July 3rd, 2011

Attorney docket number- RIPLLC007.008US1

PETITION TO MAKE SPECIAL

To,

Commissioner of Patents
P.O. Box 1450
Alexandria, Virginia, 22313-1450

Sir/Madam:

REQUEST FOR EXPEDITIOUS AND URGENT EXAMINATION OF SUBMITTED APPLICATION ON THE BASIS THAT INVENTION MATERIALLY ENHANCES THE QUALITY OF THE ENVIRONMENT OF MANKIND BY CONTRIBUTING TO THE RESTORATION OF THE BASIC LIFE SUSTAINING NATURAL ELEMENTS SUCH AS WATER AND SOIL.

The applicant of the instant application hereby requests that this application be made special pursuant to MPEP 708.02, under 37 CFR 1.102. Advancement of examination V. ENVIRONMENTAL QUALITY section. The instant application materially enhances the quality of the environment of mankind by contributing to the restoration or maintenance of the basic life-sustaining natural elements, i.e., water, and soil. This procedure allows the user to reuse water by decontaminating waste water and prevent soil contamination.

The urgent and expeditious examination of instant U.S. Patent Application will help the inventor to continue to innovate, develop and reuse brackish water and provide drinkable water using very low energy and efficient industrial scale production. The method is a cost effective method to purify and reuse available water and hence conserve water. The brackish water is usually not consumable by human and reverse osmosis process is very expensive. By desalinating the water using the current invention one can provide clean, usable water for human consumption. As such, this petition to make special for expedited examination is being made to the USPTO.

The client agrees to elect over the phone without traverse if restriction may be deemed necessary by the Examiner.

CONCLUSION

For the above mentioned reasons, applicants respectfully requests that this application be granted special status pursuant to MPEP rule 708.02 subsection V, as the claimed technology directly and relevantly is directed toward materially enhancing the quality of the environment of mankind by contributing to the restoration or maintenance of the basic life-sustaining natural elements, i.e., water.

I hereby declare that all statements made herein of my own knowledge are true and that all statements made on information and belief are believed to be true; and further that these statement were made with the knowledge that willful false statements and the like so made are punishable by fine or imprisonment, or both, under section 1001 of Title 18 of the United States Code, and that such willful false statements may jeopardize the validity of the application, any patent issuing thereon, or any patent to which this verified statement is directed.

Name: Geeta Kadambi
Registration Number: 64446
Address: 43526 Gallegos Avenue
Fremont, CA, 94539

Sign: /Geeta Kadambi/

Date: July 3rd, 2011

UNITED STATES PATENT AND TRADEMARK OFFICE

UNITED STATES DEPARTMENT OF COMMERCE
United States Patent and Trademark Office
Address: COMMISSIONER FOR PATENTS
P.O. Box 1450
Alexandria, Virginia 22313-1450
www.uspto.gov

APPLICATION NO.	FILING DATE	FIRST NAMED INVENTOR	ATTORNEY DOCKET NO.	CONFIRMATION NO.
13/175,860	07/03/2011	Saad A. Al-Jlil	RIPLLC007.008US1	3434

97207 7590 08/22/2011

Geeta Kadambi
Riddhi IP LLC
43526 Gallegos Avenue
Fremont, CA 94539

EXAMINER	
ART UNIT	PAPER NUMBER
1778	

NOTIFICATION DATE	DELIVERY MODE
08/22/2011	ELECTRONIC

Please find below and/or attached an Office communication concerning this application or proceeding.

The time period for reply, if any, is set in the attached communication.

Notice of the Office communication was sent electronically on above-indicated "Notification Date" to the following e-mail address(es):

geeta@riddhiip.com
docketing@facetsip.com

UNITED STATES PATENT AND TRADEMARK OFFICE

Commissioner for Patents
United States Patent and Trademark Office
P.O. Box 1450
Alexandria, VA 22313-1450
www.uspto.gov

Geeta Kadambi
Riddhi IP LLC
43526 Gallegos Avenue
Fremont CA 94539

AUG 22 2011

In re Application of :
Saad A. Al-Jlil :
Application No. 13/175,860 :
Filed: July 03, 2011 :
Attorney Docket No. RIPLLC007.008US1 :

DECISION ON PETITION
TO MAKE SPECIAL UNDER
THE GREEN TECHNOLOGY
PILOT PROGRAM

This is a decision on the petition under 37 CFR 1.102, filed July 03, 2011, to make the above-identified application special under the pilot program for applications pertaining to Green Technologies as set forth in 74 Federal Register Notice 64666 (December 8, 2009) and amended by 75 Federal Register Notice 28554 (May 21, 2010) and 75 Federal Register Notice 69049 (November 10, 2010).

The petition is **GRANTED**.

A grantable petition to make an application special under 37 CFR 1.102 and the pilot program as set forth in 74 FR 64666 must be directed to a nonprovisional application filed under 35 USC 111(a) or be a national stage entry under 35 USC 371, exclusive of any reissue applications.

In order to qualify for special status, the following requirements must be met. 1) The application must have no more than 3 independent claims and no more than 20 total claims. 2) The application must not contain any multiple dependent claims. 3) The petition must state the basis for seeking special status, i.e., the claimed invention either: A) materially enhances the quality of the environment or B) materially contributes to: i) the discovery or development of renewable energy resources, ii) the more efficient utilization and conservation of energy resources, or iii) greenhouse gas emission reduction. 4) If the disclosure is not clear on its face that the claimed invention materially contributes under category (A) or (B), the petition must be accompanied by a statement by the applicant, assignee, or an attorney/agent registered to practice before the Office explaining how the materiality standard is met. 5) A statement that applicant will agree to make an election without traverse in a telephonic interview if a restriction requirement is made by the examiner. 6) The petition to make special must be filed electronically. 7) The petition must be filed at least one day prior to the date that a first Office Action appears in the Patent Application Information Retrieval (PAIR) system. 8) The petition must be accompanied by a request for early publication in compliance with 37 CFR 1.219 and include the publication fee as set forth in 37 CFR 1.18(d).

The requirement for a fee for consideration of the petition to make special for applications pertaining to Green Technologies has been waived.

The instant petition complies with items 1 – 8 above. Accordingly, the above-identified application has been accorded "special" status.

Telephone inquires concerning this decision should be directed to Blaine Copenheaver at 571-272-1156.

The application is being forwarded to the examiner for action on the merits commensurate with this decision.

/Blaine Copenheaver/

Blaine Copenheaver
Quality Assurance Specialist
Technology Center 1700

UNITED STATES PATENT AND TRADEMARK OFFICE

Commissioner for Patents
United States Patent and Trademark Office
P.O. Box 1450
Alexandria, VA 22313-1450
www.uspto.gov

Paper No.

OPX Biotechnologies, Inc.
Suite 100
2425 55th Street,
Boulder CO 80301-2876

MAILED
DEC 09 2011
OFFICE OF PETITIONS

In re Application of :
Gill et al. : DECISION ON PETITION
Application No. 13/175,929 :
Filed: July 4, 2011 :
Attorney Docket No. OPXX2011-03C :

This is a decision on the "Petition Under 37 CFR 1.182 For Correction Of Inventor Name," filed November 15, 2011.

Petitioner requests that the name of inventor Tanya Warnecke be corrected to Tanya E.W. Lipscomb. The petition includes the required petition fee of $400. The petition includes a declaration by inventor Lipscomb attesting to the change of name by virtue of marriage. (It is noted that the first executed declaration in this application identifies this inventor as Tanya E.W. Lipscomb, as requested).

MPEP 605.04(c) provides that:

> In cases where an inventor's name has been changed after the application has been filed and the inventor desires to change his or her name on the application, he or she must submit a petition under 37 CFR 1.182. Applicants are also strongly encouraged to submit an application data sheet (37 CFR 1.76) showing the new name. The petition should be directed to the attention of the Office of Petitions. The petition must include an appropriate petition fee and a statement signed by the inventor setting forth both names and the procedure whereby the change of name was effected, or a copy of the court order.

The instant petition meets the requirements of MPEP 605.04(c).

Accordingly, the petition is **GRANTED**.

The inventor's name is changed in the records of the Office to Tanya E. W. LIPSCOMB.

Pursuant to the declaration filed November 15, 2011, the correspondence address of record is changed to that of customer number 79356. It is noted that no power of attorney is of record; thus, the change of address filed October 11, 2011 was not effective to change the address as it was filed by an attorney acting in a representative capacity.

The application is being forwarded to the Office of Patent Application Processing for completion of pre-examination processing.

Telephone inquiries concerning this decision should be directed to the undersigned at (571) 272-3219.

Nancy Johnson
Senior Petitions Attorney
Office of Petitions

Doc code : PET.OP.AGE
Description : Petition to make special based on Age/Health

PTO/SB/130 (07-09)
Approved for use through 07/31/2012. OMB 0651- 0031
U.S. Patent and Trademark Office; U.S. DEPARTMENT OF COMMERCE
Under the Paperwork Reduction Act of 1995, no persons are required to respond to a collection of information unless it contains a valid OMB control number

PETITION TO MAKE SPECIAL BASED ON AGE FOR ADVANCEMENT OF EXAMINATION UNDER 37 CFR 1.102(c)(1)

Application Information

Application Number	13176003	Confirmation Number	3761	Filing Date	2011-07-05
Attorney Docket Number (optional)	98473-US2	Art Unit	N/A	Examiner	Not Yet Assigned
First Named Inventor	Matthew Laskowski				
Title of Invention	AROMATIC ETHER AND ALKYNYL CONTAINING PHTHALONITRILES				

Attention: Office of Petitions
An application may be made special for advancement of examination upon filing of a petition showing that the applicant is 65 years of age, or more. No fee is required with such a petition. See 37 CFR 1.102(c)(1) and MPEP 708.02 (IV).

APPLICANT HEREBY PETITIONS TO MAKE SPECIAL FOR ADVANCEMENT OF EXAMINATION IN THIS APPLICATION UNDER 37 CFR 1.102(c)(1) and MPEP 708.02 (IV) ON THE BASIS OF THE APPLICANT'S AGE.

A grantable petition requires one of the following items:
(1) Statement by one named inventor in the application that he/she is 65 years of age, or more; or
(2) Certification by a registered attorney/agent having evidence such as a birth certificate, passport, driver's license, etc. showing one named inventor in the application is 65 years of age, or more.

Name of Inventor who is 65 years of age, or older

Given Name	Middle Name	Family Name	Suffix
Teddy	M	Keller	

A signature of the applicant or representative is required in accordance with 37 CFR 1.33 and 10.18.
Please see 37 CFR 1.4(d) for the format of the signature.

Select (1) or (2) :

(●) (1) I am an inventor in this application and I am 65 years of age, or more.

( ) (2) I am an attorney or agent registered to practice before the Patent and Trademark Office, and I certify that I am in possession of evidence, and will retain such in the application file record, showing that the inventor listed above is 65 years of age, or more.

Signature	/Teddy M Keller/	Date (YYYY-MM-DD)	2011-07-11
Name	Teddy M Keller		

PTO/SB/130 (07-09)
Approved for use through 07/31/2012. OMB 0651- 0031
U.S. Patent and Trademark Office; U.S. DEPARTMENT OF COMMERCE
Under the Paperwork Reduction Act of 1995, no persons are required to respond to a collection of information unless it contains a valid OMB control number

Privacy Act Statement

The Privacy Act of 1974 (P.L. 93-579) requires that you be given certain information in connection with your submission of the attached form related to a patent application or patent. Accordingly, pursuant to the requirements of the Act, please be advised that: (1) the general authority for the collection of this information is 35 U.S.C. 2(b)(2); (2) furnishing of the information solicited is voluntary; and (3) the principal purpose for which the information is used by the U.S. Patent and Trademark Office is to process and/or examine your submission related to a patent application or patent. If you do not furnish the requested information, the U.S. Patent and Trademark Office may not be able to process and/or examine your submission, which may result in termination of proceedings or abandonment of the application or expiration of the patent.

The information provided by you in this form will be subject to the following routine uses:

1. The information on this form will be treated confidentially to the extent allowed under the Freedom of Information Act (5 U.S.C. 552) and the Privacy Act (5 U.S.C. 552a). Records from this system of records may be disclosed to the Department of Justice to determine whether the Fr eedom of Information Act requires disclosure of these records.

2. A record from this system of records may be disclosed, as a routine use, in the course of presenting evidence to a court, magistrate, or administrative tribunal, including disclosures to opposing counsel in the course of settlement negotiations.

3. A record in this system of records may be disclosed, as a routine use, to a Member of Congress submitting a request involving an individual, to whom the record pertains, when the individual has requested assistance from the Member with respect to the subject matter of the record.

4. A record in this system of records may be disclosed, as a routine use, to a contractor of the Agency having need for the information in order to perform a contract. Recipients of information shall be required to comply with the requirements of the Privacy Act of 1974, as amended, pursuant to 5 U.S.C. 552a(m).

5. A record related to an International Application filed under the Patent Cooperation Treaty in this system of records may be disclosed, as a routine use, to the International Bureau of the World Intellectual Property Organization, pursuant to the Patent Cooperation Treaty.

6. A record in this system of records may be disclosed, as a routine use, to another federal agency for purposes of National Security review (35 U.S.C. 181) and for review pursuant to the Atomic Energy Act (42 U.S.C. 218(c)).

7. A record from this system of records may be disclosed, as a routine use, to the Administrator, General Services, or his/her designee, during an inspection of records conducted by GSA as part of that agency's responsibility to recommend improvements in records management practices and programs, under authority of 44 U.S.C. 2904 and 2906. Such disclosure shall be made in accordance with the GSA regulations governing inspection of records for this purpose, and any other relevant (i.e., GSA or Commerce) directive. Such disclosure shall not be used to make determinations about indivi duals.

8. A record from this system of records may be disclosed, as a routine use, to the public after either publication of the application pursuant to 35 U.S.C. 122(b) or issuance of a patent pursuant to 35 U.S.C. 151. Further, a record may be disclosed, subject to the limitations of 37 CFR 1.14, as a routine use, to the public if the record was filed in an application which became abandoned or in which the proceedings were terminated and which application is referenced by either a published application, an application open to public inspections or an issued patent.

9. A record from this system of records may be disclosed, as a routine use, to a Federal, State, or local law enforcement agency, if the USPTO becomes aware of a violation or potential violation of law or regulation.

UNITED STATES PATENT AND TRADEMARK OFFICE

Commissioner for Patents
United States Patent and Trademark Office
P.O. Box 1450
Alexandria, VA 22313-1450
www.uspto.gov

In re Application of
Matthew Laskowski

Application No. 13176003

Filed:

Attorney Docket No. 98473-US2

:
:
:DECISION ON PETITION TO MAKE SPECIAL
:UNDER 37 CFR 1.102(c)(1)
:

This is a decision on the electronic petition under 37 CFR 1.102 (c)(1), filed 11-JUL-2011 to make the above-identified application special based on applicant's age as set forth in MPEP § 708.02, Section IV.

The petition is **GRANTED**.

A grantable petition to make an application special under 37 CFR 1.102(c)(1), MPEP § 708.02, Section IV: Applicant's Age must include a statement by applicant or a registered practitioner having evidence that applicant is at least 65 years of age. No fee is required.

Accordingly, the above-identified application has been accorded "special" status and will be taken up for action by the examiner upon the completion of all pre-examination processing.

Telephone inquiries concerning this electronic decision should be directed to the Electronic Business Center at 866-217-9197.

All other inquiries concerning either the examination or status of the application should be directed to the Technology Center.

Doc code : PET.OP.AGE
Description : Petition to make special based on Age/Health

PTO/SB/130 (07-09)
Approved for use through 07/31/2012. OMB 0651- 0031
U.S. Patent and Trademark Office; U.S. DEPARTMENT OF COMMERCE
Under the Paperwork Reduction Act of 1995, no persons are required to respond to a collection of information unless it contains a valid OMB control number

PETITION TO MAKE SPECIAL BASED ON AGE FOR ADVANCEMENT OF EXAMINATION UNDER 37 CFR 1.102(c)(1)

Application Information

Application Number	13176009	Confirmation Number	3774	Filing Date	2011-07-05
Attorney Docket Number (optional)	98474-US3	Art Unit	N/A	Examiner	Not Yet Assigned
First Named Inventor	Matthew Laskowski				
Title of Invention	PHOSPHINE OXIDE CONTAINING PHTHALONITRILES				

Attention: Office of Petitions
An application may be made special for advancement of examination upon filing of a petition showing that the applicant is 65 years of age, or more. No fee is required with such a petition. See 37 CFR 1.102(c)(1) and MPEP 708.02 (IV).

APPLICANT HEREBY PETITIONS TO MAKE SPECIAL FOR ADVANCEMENT OF EXAMINATION IN THIS APPLICATION UNDER 37 CFR 1.102(c)(1) and MPEP 708.02 (IV) ON THE BASIS OF THE APPLICANT'S AGE.

A grantable petition requires one of the following items:
(1) Statement by one named inventor in the application that he/she is 65 years of age, or more; or
(2) Certification by a registered attorney/agent having evidence such as a birth certificate, passport, driver's license, etc. showing one named inventor in the application is 65 years of age, or more.

Name of Inventor who is 65 years of age, or older

Given Name	Middle Name	Family Name	Suffix
Teddy	M	Keller	

A signature of the applicant or representative is required in accordance with 37 CFR 1.33 and 10.18.
Please see 37 CFR 1.4(d) for the format of the signature.

Select (1) or (2) :

(●) (1) I am an inventor in this application and I am 65 years of age, or more.

( ) (2) I am an attorney or agent registered to practice before the Patent and Trademark Office, and I certify that I am in possession of evidence, and will retain such in the application file record, showing that the inventor listed above is 65 years of age, or more.

Signature	/Teddy M Keller/	Date (YYYY-MM-DD)	2011-07-11
Name	Teddy M Keller		

PTO/SB/130 (07-09)
Approved for use through 07/31/2012. OMB 0651- 0031
U.S. Patent and Trademark Office; U.S. DEPARTMENT OF COMMERCE
Under the Paperwork Reduction Act of 1995, no persons are required to respond to a collection of information unless it contains a valid OMB control number

Privacy Act Statement

The Privacy Act of 1974 (P.L. 93-579) requires that you be given certain information in connection with your submission of the attached form related to a patent application or patent. Accordingly, pursuant to the requirements of the Act, please be advised that: (1) the general authority for the collection of this information is 35 U.S.C. 2(b)(2); (2) furnishing of the information solicited is voluntary; and (3) the principal purpose for which the information is used by the U.S. Patent and Trademark Office is to process and/or examine your submission related to a patent application or patent. If you do not furnish the requested information, the U.S. Patent and Trademark Office may not be able to process and/or examine your submission, which may result in termination of proceedings or abandonment of the application or expiration of the patent.

The information provided by you in this form will be subject to the following routine uses:

1. The information on this form will be treated confidentially to the extent allowed under the Freedom of Information Act (5 U.S.C. 552) and the Privacy Act (5 U.S.C. 552a). Records from this system of records may be disclosed to the Department of Justice to determine whether the Fr eedom of Information Act requires disclosure of these records.

2. A record from this system of records may be disclosed, as a routine use, in the course of presenting evidence to a court, magistrate, or administrative tribunal, including disclosures to opposing counsel in the course of settlement negotiations.

3. A record in this system of records may be disclosed, as a routine use, to a Member of Congress submitting a request involving an individual, to whom the record pertains, when the individual has requested assistance from the Member with respect to the subject matter of the record.

4. A record in this system of records may be disclosed, as a routine use, to a contractor of the Agency having need for the information in order to perform a contract. Recipients of information shall be required to comply with the requirements of the Privacy Act of 1974, as amended, pursuant to 5 U.S.C. 552a(m).

5. A record related to an International Application filed under the Patent Cooperation Treaty in this system of records may be disclosed, as a routine use, to the International Bureau of the World Intellectual Property Organization, pursuant to the Patent Cooperation Treaty.

6. A record in this system of records may be disclosed, as a routine use, to another federal agency for purposes of National Security review (35 U.S.C. 181) and for review pursuant to the Atomic Energy Act (42 U.S.C. 218(c)).

7. A record from this system of records may be disclosed, as a routine use, to the Administrator, General Services, or his/her designee, during an inspection of records conducted by GSA as part of that agency's responsibility to recommend improvements in records management practices and programs, under authority of 44 U.S.C. 2904 and 2906. Such disclosure shall be made in accordance with the GSA regulations governing inspection of records for this purpose, and any other relevant (i.e., GSA or Commerce) directive. Such disclosure shall not be used to make determinations about indivi duals.

8. A record from this system of records may be disclosed, as a routine use, to the public after either publication of the application pursuant to 35 U.S.C. 122(b) or issuance of a patent pursuant to 35 U.S.C. 151. Further, a record may be disclosed, subject to the limitations of 37 CFR 1.14, as a routine use, to the public if the record was filed in an application which became abandoned or in which the proceedings were terminated and which application is referenced by either a published application, an application open to public inspections or an issued patent.

9. A record from this system of records may be disclosed, as a routine use, to a Federal, State, or local law enforcement agency, if the USPTO becomes aware of a violation or potential violation of law or regulation.

UNITED STATES PATENT AND TRADEMARK OFFICE

Commissioner for Patents
United States Patent and Trademark Office
P.O. Box 1450
Alexandria, VA 22313-1450
www.uspto.gov

In re Application of
Matthew Laskowski

Application No. 13176009

Filed:

Attorney Docket No. 98474-US3

:DECISION ON PETITION TO MAKE SPECIAL
:UNDER 37 CFR 1.102(c)(1)

This is a decision on the electronic petition under 37 CFR 1.102 (c)(1), filed 11-JUL-2011 to make the above-identified application special based on applicant's age as set forth in MPEP § 708.02, Section IV.

The petition is **GRANTED**.

A grantable petition to make an application special under 37 CFR 1.102(c)(1), MPEP § 708.02, Section IV: Applicant's Age must include a statement by applicant or a registered practitioner having evidence that applicant is at least 65 years of age. No fee is required.

Accordingly, the above-identified application has been accorded "special" status and will be taken up for action by the examiner upon the completion of all pre-examination processing.

Telephone inquiries concerning this electronic decision should be directed to the Electronic Business Center at 866-217-9197.

All other inquiries concerning either the examination or status of the application should be directed to the Technology Center.

Doc Code: PPH.PCT.652
Document Description: Petition to make special under PCT-Patent Pros Hwy

PTO/SB/20PCT-KR (06-10)
Approved for use through 01/31/2012. OMB 0651-0058
U.S. Patent and Trademark Office; U. S. DEPARTMENT OF COMMERCE
Under the Paperwork Reduction Act of 1995, no persons are required to respond to a collection of information unless it displays a valid OMB control number.

REQUEST FOR PARTICIPATION IN THE PATENT COOPERATION TREATY - PATENT PROSECUTION HIGHWAY (PCT-PPH) PILOT PROGRAM BETWEEN THE KOREAN INTELLECTUAL PROPERTY OFFICE (KIPO) AND THE USPTO

Application No:	13176021	Filing date:	July 5, 2011
First Named Inventor:	Nagaraj Jayanth et al.		
Title of the Invention:	Compressor Sensor Module		

THIS REQUEST FOR PARTICIPATION IN THE PCT-PPH PILOT PROGRAM ALONG WITH THE REQUIRED DOCUMENTS MUST BE SUBMITTED VIA EFS-WEB. INFORMATION REGARDING EFS-WEB IS AVAILABLE AT HTTP://WWW.USPTO.GOV/EBC/EFS_HELP.HTML

APPLICANT HEREBY REQUESTS PARTICIPATION IN THE PCT-PPH PROGRAM AND PETITIONS TO MAKE THE ABOVE-IDENTIFIED APPLICATION SPECIAL UNDER THE PCT-PPH PROGRAM.

The above-identified application is (1) a national stage entry of the corresponding PCT application, or (2) a national stage entry of another PCT application which claims priority to the corresponding PCT application, or (3) a national application that claims domestic/ foreign priority to the corresponding PCT application, or (4) a national application which forms the basis for the priority claim in the corresponding PCT application, or (5) a continuing application of a U.S. application that satisfies one of (1) to (4) above, or (6) a U.S. application that claims domestic benefit to a U.S. provisional application which forms the basis for the priority claim in the corresponding PCT application.

The corresponding PCT application number(s) is/are: PCT/US2008/012362

The international filing date of the corresponding PCT application(s) is/are:
10/31/2008

I. List of Required Documents:

a. **A copy of the latest international work product (WO/ISA, WO/IPEA, or IPER) in the above–identified corresponding PCT application(s)**

☐ Is attached.

☑ Is not attached because the document is already in the U.S. application.

b. **A copy of all claims which were indicated as having novelty, inventive step and industrial applicability in the above-identified corresponding PCT application(s).**

☐ Is attached.

☑ Is not attached because the document is already in the U.S. application.

c. **English translations of the documents in a. and b. above are attached (if the documents are not in the English language). A statement that the English translation is accurate is attached for the document in b. above.**

This collection of information is required by 35 U.S.C. 119, 37 CFR 1.55, and 37 CFR 1.102(d). The information is required to obtain or retain a benefit by the public, which is to file (and by the USPTO to process) an application. Confidentiality is governed by 35 U.S.C. 122 and 37 CFR 1.11 and 1.14. This collection is estimated to take 2 hours to complete, including gathering, preparing, and submitting the completed application form to the USPTO. Time will vary depending upon the individual case. Any comments on the amount of time you require to complete this form and/or suggestions for reducing this burden should be sent to the Chief Information Officer, U.S. Patent and Trademark Office, U.S. Department of Commerce, P.O. Box 1450, Alexandria, VA 22313-1450. DO NOT SEND FEES OR COMPLETED FORMS TO THIS ADDRESS.

PTO/SB/20PCT-KR (06-10)
Approved for use through 01/31/2012. OMB 0651-0058
U.S.Patent and Trademark Office; U.S. DEPARTMENT OF COMMERCE
Under the Paperwork Reduction Act of 1995, no persons are required to respond to a collection of information unless it displays a valid OMB control number.

REQUEST FOR PARTICIPATION IN THE PCT-PPH PILOT PROGRAM BETWEEN THE KIPO AND THE USPTO

(continued)

Application No.:	13176021
First Named Inventor:	Nagaraj Jayanth

d. **(1) An information disclosure statement listing the documents cited in the international work products (ISR, WO/ISA, WO/IPEA, IPER) of the corresponding PCT application.**

☐ Is attached

☑ Has already been filed in the above-identified U.S. application on herewith

(2) Copies of all documents (except) for U.S. patents or U.S. patent application publications)

☐ Are attached.

☑ Have already been filed in the above-identified U.S. application on herewith

II. Claims Correspondence Table:

Claims in US Application	Patentable Claims in the corresponding PCT Application	Explanation regarding the correspondence
1-18	1-18	The claims are identical

III. All the claims in the US application sufficiently correspond to the patentable claims in the corresponding PCT application.

Signature /MichaelMalinzak/	Date July 5, 2011
Name (Print/Typed) Michael Malinzak	Registration Number 43,770

Privacy Act Statement

The **Privacy Act of 1974 (P.L. 93-579)** requires that you be given certain information in connection with your submission of the attached form related to a patent application or patent. Accordingly, pursuant to the requirements of the Act, please be advised that: (1) the general authority for the collection of this information is 35 U.S.C. 2(b)(2); (2) furnishing of the information solicited is voluntary; and (3) the principal purpose for which the information is used by the U.S. Patent and Trademark Office is to process and/or examine your submission related to a patent application or patent. If you do not furnish the requested information, the U.S. Patent and Trademark Office may not be able to process and/or examine your submission, which may result in termination of proceedings or abandonment of the application or expiration of the patent.

The information provided by you in this form will be subject to the following routine uses:

1. The information on this form will be treated confidentially to the extent allowed under the Freedom of Information Act (5 U.S.C. 552) and the Privacy Act (5 U.S.C 552a). Records from this system of records may be disclosed to the Department of Justice to determine whether disclosure of these records is required by the Freedom of Information Act.
2. A record from this system of records may be disclosed, as a routine use, in the course of presenting evidence to a court, magistrate, or administrative tribunal, including disclosures to opposing counsel in the course of settlement negotiations.
3. A record in this system of records may be disclosed, as a routine use, to a Member of Congress submitting a request involving an individual, to whom the record pertains, when the individual has requested assistance from the Member with respect to the subject matter of the record.
4. A record in this system of records may be disclosed, as a routine use, to a contractor of the Agency having need for the information in order to perform a contract. Recipients of information shall be required to comply with the requirements of the Privacy Act of 1974, as amended, pursuant to 5 U.S.C. 552a(m).
5. A record related to an International Application filed under the Patent Cooperation Treaty in this system of records may be disclosed, as a routine use, to the International Bureau of the World Intellectual Property Organization, pursuant to the Patent Cooperation Treaty.
6. A record in this system of records may be disclosed, as a routine use, to another federal agency for purposes of National Security review (35 U.S.C. 181) and for review pursuant to the Atomic Energy Act (42 U.S.C. 218(c)).
7. A record from this system of records may be disclosed, as a routine use, to the Administrator, General Services, or his/her designee, during an inspection of records conducted by GSA as part of that agency's responsibility to recommend improvements in records management practices and programs, under authority of 44 U.S.C. 2904 and 2906. Such disclosure shall be made in accordance with the GSA regulations governing inspection of records for this purpose, and any other relevant (*i.e.*, GSA or Commerce) directive. Such disclosure shall not be used to make determinations about individuals.
8. A record from this system of records may be disclosed, as a routine use, to the public after either publication of the application pursuant to 35 U.S.C. 122(b) or issuance of a patent pursuant to 35 U.S.C. 151. Further, a record may be disclosed, subject to the limitations of 37 CFR 1.14, as a routine use, to the public if the record was filed in an application which became abandoned or in which the proceedings were terminated and which application is referenced by either a published application, an application open to public inspection or an issued patent.
9. A record from this system of records may be disclosed, as a routine use, to a Federal, State, or local law enforcement agency, if the USPTO becomes aware of a violation or potential violation of law or regulation.

UNITED STATES PATENT AND TRADEMARK OFFICE

UNITED STATES DEPARTMENT OF COMMERCE
United States Patent and Trademark Office
Address: COMMISSIONER FOR PATENTS
P.O. Box 1450
Alexandria, Virginia 22313-1450
www.uspto.gov

APPLICATION NO.	FILING DATE	FIRST NAMED INVENTOR	ATTORNEY DOCKET NO.	CONFIRMATION NO.
13/176,021		Nagaraj Jayanth	0315-000609/COB	3799

27572 7590 07/13/2011
HARNESS, DICKEY & PIERCE, P.L.C.
P.O. BOX 828
BLOOMFIELD HILLS, MI 48303

EXAMINER	
ART UNIT	PAPER NUMBER
3744	

MAIL DATE	DELIVERY MODE
07/13/2011	PAPER

Please find below and/or attached an Office communication concerning this application or proceeding.

The time period for reply, if any, is set in the attached communication.

UNITED STATES PATENT AND TRADEMARK OFFICE

Commissioner for Patents
United States Patent and Trademark Office
P.O. Box 1450
Alexandria, VA 22313-1450
www.uspto.gov

HARNESS, DICKEY & PIERCE, P.L.C.
P.O. BOX 828
BLOOMFIELD HILLS MI 48303

In re Application of:	: DECISION ON A REQUEST TO
JAYANTH, NAGARAJ	: PARTICIPATE IN PATENT
Serial No.: 13/176021	: PROSECUTION HIGHWAY
Filed: July 5, 2011	: PROGRAM AND PETITION
Attorney Docket No. : 0315-000609/COB	: TO MAKE SPECIAL UNDER
Title: COMPRESSOR SENSOR MODULE	: CFR 1.102(a)

This is a decision on the request to participate in the Patent Prosecution Highway (PPH) program and the petition under 37 CFR 1.102(a), filed July 5, 2011 to make the above-identified application special.

The request and petition are **dismissed.**

A grantable request to participate in the PPH pilot program and petition to make special require:

(1) The U.S. application must validly claim priority under 35 U.S.C. 119(a) to one or more PCT applications filed in the JPO, EPO, KIPO, or USPTO;
(2) Applicant must submit a copy of the allowable/patentable claim(s) from the PCT application(s) latest international work product (the written opinion or the IPER) along with an English translation thereof and a statement that the English translation is accurate;
(3) All the claims in the U.S. application must sufficiently correspond or be amended to sufficiently correspond to the allowable/patentable claim(s) in the PCT application(s);
(4) Examination of the U.S. application has not begun;
(5) Applicant must submit a copy of the latest international work product from the PCT application containing the allowable/patentable claim(s) along with an English translation thereof and a statement that the English translation is accurate; and
(6) Applicant must submit an IDS listing the documents cited by the PCT examiner in the international work product along with copies of documents except U.S. patents or U.S. patent application publications.

The request to participate in the PPH program and petition met all conditions except Item #2 and Item #3 above.

The request to participate in the PPH program and petition failed to include a copy of the PCT allowed claims. Applicant indicates in the petition that a copy of allowable claims from the PCT application is not attached because the document is already in the U.S. application. The record indicates, however, that the only claims submitted are those pending examination in the U.S. application, filed on July 5, 2010. Given this, it also cannot be verified that the pending U.S. claims all correspond to the allowable claims in the PCT application. Even assuming the applicant is correct in asserting that the U.S. application claims 1-18 are identical to the allowable PCT claims (which will satisfy Item #3), the applicant still needs to submit a copy of the allowable claims from the PCT application for review.

Applicant is encouraged to cite and submit all relevant prior art references, if any, to facilitate examination in this application.

Applicant is given a time period of **ONE MONTH or THIRTY DAYS**, whichever is longer, from the mailing date of this decision to correct the deficiencies. **NO EXTENSION OF TIME UNDER 37 CFR 1.136 IS PERMITTED.** If the deficiencies are not corrected with the time period given, the application will await action in its regular turn. Response must be filed via EFS-Web.

Telephone inquiries concerning this decision should be directed to Henry C. Yuen at 571-272-4856.

Petition is **dismissed**.

/Henry C. Yuen/

Henry C. Yuen, Special Programs Examiner
Technology Center 3700 – Mechanical Engineering,
Manufacturing and Products
571-272-4856

PATENT

IN THE UNITED STATES PATENT AND TRADEMARK OFFICE

Application No.:	13/176,021
Filing Date:	July 5, 2011
Applicant:	Nagaraj Jayanth
Group Art Unit:	3744
Examiner:	Not Yet Assigned
Title:	COMPRESSOR SENSOR MODULE
Attorney Docket:	0315-000609/COB

Mail Stop
Commissioner for Patents
P.O. Box 1450
Alexandria, VA 22313-1450

RESPONSE TO DECISION ON A REQUEST TO PARTICIPATE IN PATENT PROSECUTION HIGHWAY PROGRAM AND PETITION TO MAKE SPECIAL UNDER 37 C.F.R 1.102(a)

Sir:

In response to the Decision on a Request to Participate in Patent Prosecution Highway Program and Petition to Make Special Under 37 C.F.R. 1.102(a) mailed July 13, 2011, please consider the remarks set forth below.

The Decision indicates that the Request to Participate in Patent Prosecution Highway Program and Petition to Make Special Under 37 C.F.R. 1.102(a) filed July 5, 2011 are dismissed for: (1) failure to submit a copy of the allowable/patentable claims from the PCT application's latest international work product, an English translation thereof and a statement that the English translation is accurate; and (2) because all of

the claims in the U.S. application must sufficiently correspond or be amended to sufficiently correspond to the allowable/patentable claims in the PCT application.

The latest international work product in the corresponding PCT application, the International Preliminary Report on Patentability and the International Search Report, were both filed on July 5, 2011, along with the Request to Participate in Patent Prosecution Highway Program and Petition to Make Special. A copy of the corresponding PCT application publication was also filed in an Information Disclosure Statement on July 5, 2011. I've enclosed a copy of the PAIR transaction history for this application to show that the International Preliminary Report on Patentability, the International Search Report and the Information Disclosure Statement are of record. Enclosed for your convenience please find a copy of the documents previously submitted with the Information Disclosure Statement.

It is believed that all of the stated grounds of dismissal have been properly traversed, accommodated, or rendered moot. Applicant therefore respectfully requests that the Examiner reconsider the Request to Participate in Patent Prosecution Highway Program and Petition to Make Special. If the Examiner believes that personal communication will expedite prosecution of this application, the Examiner is invited to telephone the undersigned at (248) 641-1600.

Respectfully submitted,

Dated: July 25, 2011

By: /MichaelMalinzak/
Michael Malinzak, Reg. No. 43,770

HARNESS, DICKEY & PIERCE, P.L.C.
P.O. Box 828
Bloomfield Hills, Michigan 48303
(248) 641-1600

MM/mp
1619836D.1

13/176,021	COMPRESSOR SENSOR MODULE	0315-000609/COB	07-25-2011::16:58:23

This application is officially maintained in electronic form. To View: Click the desired Document Description. To Download and Print: Check the desired document(s) and click PDF.

Bibliographic Data

Mail Room Date	Document Code	Document Description	Document Category	Page Count
07-18-2011	**WFEE**	**Fee Worksheet (SB06)**	**PROSECUTION**	**1**
07-18-2011	APP.FILE.REC	Filing Receipt	PROSECUTION	3
07-13-2011	PET.DEC.TC	Petition decision routed to the Technology Center to act on the decision or continue prosecution	PROSECUTION	3
07-05-2011	IDS	Information Disclosure Statement (IDS) Form (SB08)	PROSECUTION	35
07-05-2011	TRAN.LET	Transmittal Letter	PROSECUTION	2
07-05-2011	IDS	Information Disclosure Statement (IDS) Form (SB08)	PROSECUTION	24
07-05-2011	TRAN.LET	Transmittal Letter	PROSECUTION	2
07-05-2011	FOR	Foreign Reference	PROSECUTION	12
07-05-2011	FOR	Foreign Reference	PROSECUTION	9
07-05-2011	FOR	Foreign Reference	PROSECUTION	9
07-05-2011	FOR	Foreign Reference	PROSECUTION	9
07-05-2011	FOR	Foreign Reference	PROSECUTION	15
07-05-2011	FOR	Foreign Reference	PROSECUTION	29
07-05-2011	FOR	Foreign Reference	PROSECUTION	7
07-05-2011	FOR	Foreign Reference	PROSECUTION	11
07-05-2011	FOR	Foreign Reference	PROSECUTION	21
07-05-2011	FOR	Foreign Reference	PROSECUTION	14
07-05-2011	FOR	Foreign Reference	PROSECUTION	15
07-05-2011	FOR	Foreign Reference	PROSECUTION	12
07-05-2011	FOR	Foreign Reference	PROSECUTION	29
07-05-2011	FOR	Foreign Reference	PROSECUTION	9
07-05-2011	FOR	Foreign Reference	PROSECUTION	9
07-05-2011	FOR	Foreign Reference	PROSECUTION	17
07-05-2011	FOR	Foreign Reference	PROSECUTION	13
07-05-2011	FOR	Foreign Reference	PROSECUTION	14
07-05-2011	FOR	Foreign Reference	PROSECUTION	26
07-05-2011	FOR	Foreign Reference	PROSECUTION	3
07-05-2011	FOR	Foreign Reference	PROSECUTION	7
07-05-2011	FOR	Foreign Reference	PROSECUTION	8
07-05-2011	FOR	Foreign Reference	PROSECUTION	9
07-05-2011	FOR	Foreign Reference	PROSECUTION	12
07-05-2011	FOR	Foreign Reference	PROSECUTION	61
07-05-2011	FOR	Foreign Reference	PROSECUTION	94
07-05-2011	FOR	Foreign Reference	PROSECUTION	71
07-05-2011	FOR	Foreign Reference	PROSECUTION	24
07-05-2011	FOR	Foreign Reference	PROSECUTION	34
07-05-2011	FOR	Foreign Reference	PROSECUTION	47
07-05-2011	FOR	Foreign Reference	PROSECUTION	22
07-05-2011	FOR	Foreign Reference	PROSECUTION	60
07-05-2011	NPL	Non Patent Literature	PROSECUTION	11
07-05-2011	NPL	Non Patent Literature	PROSECUTION	7
07-05-2011	NPL	Non Patent Literature	PROSECUTION	3

07-05-2011	NPL	Non Patent Literature	PROSECUTION	6
07-05-2011	NPL	Non Patent Literature	PROSECUTION	141
07-05-2011	NPL	Non Patent Literature	PROSECUTION	153
07-05-2011	NPL	Non Patent Literature	PROSECUTION	10
07-05-2011	NPL	Non Patent Literature	PROSECUTION	8
07-05-2011	NPL	Non Patent Literature	PROSECUTION	10
07-05-2011	NPL	Non Patent Literature	PROSECUTION	24
07-05-2011	NPL	Non Patent Literature	PROSECUTION	22
07-05-2011	371P	Documents submitted with 371 Applications	PROSECUTION	5
07-05-2011	371P	Documents submitted with 371 Applications	PROSECUTION	6
07-05-2011	371P	Documents submitted with 371 Applications	PROSECUTION	7
07-05-2011	371P	Documents submitted with 371 Applications	PROSECUTION	2
07-05-2011	NPL	Non Patent Literature	PROSECUTION	329
07-05-2011	371P	Documents submitted with 371 Applications	PROSECUTION	11
07-05-2011	371P	Documents submitted with 371 Applications	PROSECUTION	2
07-05-2011	371P	Documents submitted with 371 Applications	PROSECUTION	3
07-05-2011	WFEE	Fee Worksheet (SB06)	PROSECUTION	2
07-05-2011	N417	EFS Acknowledgment Receipt	PROSECUTION	9
07-05-2011	ADS	Application Data Sheet	PROSECUTION	5
07-05-2011	SPEC	Specification	PROSECUTION	23
07-05-2011	CLM	Claims	PROSECUTION	5
07-05-2011	ABST	Abstract	PROSECUTION	1
07-05-2011	DRW	Drawings-only black and white line drawings	PROSECUTION	6
07-05-2011	OATH	Oath or Declaration filed	PROSECUTION	3
07-05-2011	TRAN.LET	Transmittal Letter	PROSECUTION	3
07-05-2011	PPH.PCT.652	Petition to make Special under PCT-Patent Pros Hwy	PROSECUTION	3
07-05-2011	N417	EFS Acknowledgment Receipt	PROSECUTION	4
07-05-2011	NPL	Non Patent Literature	PROSECUTION	20
07-05-2011	NPL	Non Patent Literature	PROSECUTION	9
07-05-2011	NPL	Non Patent Literature	PROSECUTION	12
07-05-2011	NPL	Non Patent Literature	PROSECUTION	207
07-05-2011	NPL	Non Patent Literature	PROSECUTION	10
07-05-2011	NPL	Non Patent Literature	PROSECUTION	9
07-05-2011	NPL	Non Patent Literature	PROSECUTION	14
07-05-2011	NPL	Non Patent Literature	PROSECUTION	3
07-05-2011	NPL	Non Patent Literature	PROSECUTION	5
07-05-2011	NPL	Non Patent Literature	PROSECUTION	4
07-05-2011	NPL	Non Patent Literature	PROSECUTION	66
07-05-2011	NPL	Non Patent Literature	PROSECUTION	61
07-05-2011	NPL	Non Patent Literature	PROSECUTION	109
07-05-2011	NPL	Non Patent Literature	PROSECUTION	116
07-05-2011	371P	Documents submitted with 371 Applications	PROSECUTION	5
07-05-2011	371P	Documents submitted with 371 Applications	PROSECUTION	6

Close Window

Doc code: IDS
Doc description: Information Disclosure Statement (IDS) Filed

PTO/SB/08a (01-10)
Approved for use through 07/31/2012. OMB 0651-0031
U.S. Patent and Trademark Office; U.S. DEPARTMENT OF COMMERCE
Under the Paperwork Reduction Act of 1995, no persons are required to respond to a collection of information unless it contains a valid OMB control number.

INFORMATION DISCLOSURE STATEMENT BY APPLICANT (**Not for submission under 37 CFR 1.99)**		
	Application Number	
	Filing Date	
	First Named Inventor	Jayanth NAGARAJ
	Art Unit	N/A
	Examiner Name	Not Yet Assigned
	Attorney Docket Number	0315-000609/US/COB

U.S.PATENTS						Remove
Examiner Initial*	Cite No	Patent Number	Kind Code[1]	Issue Date	Name of Patentee or Applicant of cited Document	Pages,Columns,Lines where Relevant Passages or Relevant Figures Appear
	1	2054542		1936-09-15	Hoelle	
	2	2978879		1961-04-11	Heidorn	
	3	3047696		1962-07-31	Heidorn	
	4	3107843		1963-10-22	Finn	
	5	3170304		1965-02-23	Hale	
	6	3232519		1966-02-01	Long	
	7	3278111		1966-10-11	Parker	
	8	3665399		1972-05-23	Zehr et al.	

INFORMATION DISCLOSURE STATEMENT BY APPLICANT (Not for submission under 37 CFR 1.99)		
	Application Number	
	Filing Date	
	First Named Inventor	Jayanth NAGARAJ
	Art Unit	N/A
	Examiner Name	Not Yet Assigned
	Attorney Docket Number	0315-000609/US/COB

	9	3729949		1973-05-01	Talbot	
	10	3735377		1973-05-22	Kaufman	
	11	3742303		1973-06-26	Dageford	
	12	3783681		1974-01-08	Hirt et al.	
	13	3927712		1975-12-23	Nakayama	
	14	3935519		1976-01-27	Pfarrer et al.	
	15	3950962		1976-04-20	Odashima	
	16	3960011		1976-06-01	Renz et al.	
	17	3978382		1976-08-31	Pfarrer et al.	
	18	3998068		1976-12-21	Chirnside	
	19	4014182		1977-03-29	Granryd	

INFORMATION DISCLOSURE STATEMENT BY APPLICANT (Not for submission under 37 CFR 1.99)		
	Application Number	
	Filing Date	
	First Named Inventor	Jayanth NAGARAJ
	Art Unit	N/A
	Examiner Name	Not Yet Assigned
	Attorney Docket Number	0315-000609/US/COB

	20	4018584		1977-04-19	Mullen	
	21	4024725		1977-05-24	Uchida et al.	
	22	4034570		1977-07-12	Anderson et al.	
	23	4038061		1977-07-26	Anderson et al.	
	24	4046532		1977-09-06	Nelson	
	25	4060716		1977-11-29	Pekrul et al.	
	26	4066869		1978-01-03	Apaloo et al.	
	27	4090248		1978-05-16	Swanson et al.	
	28	4102394		1978-07-25	Botts	
	29	4105063		1978-08-08	Bergt	
	30	4104888		1978-08-08	Reedy et al.	

INFORMATION DISCLOSURE STATEMENT BY APPLICANT (Not for submission under 37 CFR 1.99)		
	Application Number	
	Filing Date	
	First Named Inventor	Jayanth NAGARAJ
	Art Unit	N/A
	Examiner Name	Not Yet Assigned
	Attorney Docket Number	0315-000609/US/COB

	31	4112703		1978-09-12	Kountz	
	32	4137057		1979-01-30	Piet et al.	
	33	4136730		1979-01-30	Kinsey	
	34	4137725		1979-02-06	Martin	
	35	4142375		1979-03-06	Abe et al.	
	36	4143707		1979-03-13	Lewis et al.	
	37	4146085		1979-03-27	Wills	
	38	RE29966		1979-04-17	Nussbaum	
	39	4156350		1979-05-29	Elliott et al.	
	40	4161106		1979-07-17	Savage et al.	
	41	4165619		1979-08-28	Girard	

INFORMATION DISCLOSURE STATEMENT BY APPLICANT (Not for submission under 37 CFR 1.99)		
	Application Number	
	Filing Date	
	First Named Inventor	Jayanth NAGARAJ
	Art Unit	N/A
	Examiner Name	Not Yet Assigned
	Attorney Docket Number	0315-000609/US/COB

	42	4171622		1979-10-23	Yamaguchi et al.	
	43	4173871		1979-11-13	Brooks	
	44	RE30242		1980-04-01	del Toro et al.	
	45	4209994		1980-07-01	Mueller et al.	
	46	4211089		1980-07-08	Mueller et al.	
	47	4220010		1980-09-02	Mueller et al.	
	48	4227862		1980-10-14	Andrew et al.	
	49	4232530		1980-11-11	Mueller	
	50	4233818		1980-11-18	Lastinger	
	51	4236379		1980-12-02	Mueller	
	52	4244182		1981-01-13	Behr	

INFORMATION DISCLOSURE STATEMENT BY APPLICANT (Not for submission under 37 CFR 1.99)		
	Application Number	
	Filing Date	
	First Named Inventor	Jayanth NAGARAJ
	Art Unit	N/A
	Examiner Name	Not Yet Assigned
	Attorney Docket Number	0315-000609/US/COB

	53	4246763		1981-01-27	Mueller et al.	
	54	4248051		1981-02-03	Darcy et al.	
	55	4251988		1981-02-24	Allard et al.	
	56	4257795		1981-03-24	Shaw	
	57	4259847		1981-04-07	Pearse, Jr.	
	58	4267702		1981-05-19	Houk	
	59	4271898		1981-06-09	Freeman	
	60	4286438		1981-09-01	Clarke	
	61	4290480		1981-09-22	Sulkowski	
	62	4301660		1981-11-24	Mueller et al.	
	63	4307775		1981-12-29	Saunders et al.	

INFORMATION DISCLOSURE STATEMENT BY APPLICANT (Not for submission under 37 CFR 1.99)		
	Application Number	
	Filing Date	
	First Named Inventor	Jayanth NAGARAJ
	Art Unit	N/A
	Examiner Name	Not Yet Assigned
	Attorney Docket Number	0315-000609/US/COB

	64	4311188		1982-01-19	Kojima et al.	
	65	4319461		1982-03-16	Shaw	
	66	4325223		1982-04-20	Cantley	
	67	4328680		1982-05-11	Stamp, Jr. et al.	
	68	4328678		1982-05-11	Kono et al.	
	69	4333317		1982-06-08	Sawyer	
	70	4333316		1982-06-08	Stamp, Jr. et al.	
	71	4336001		1982-06-22	Andrew et al.	
	72	4338790		1982-07-13	Saunders et al.	
	73	4338791		1982-07-13	Stamp, Jr. et al.	
	74	4345162		1982-08-17	Hammer et al.	

INFORMATION DISCLOSURE STATEMENT BY APPLICANT (Not for submission under 37 CFR 1.99)		
	Application Number	
	Filing Date	
	First Named Inventor	Jayanth NAGARAJ
	Art Unit	N/A
	Examiner Name	Not Yet Assigned
	Attorney Docket Number	0315-000609/US/COB

	75	4350021		1982-09-21	Lundstrom	
	76	4350023		1982-09-21	Kuwabara et al.	
	77	4356703		1982-11-02	Vogel	
	78	4361273		1982-11-30	Levine et al.	
	79	4365983		1982-12-28	Abraham et al.	
	80	4370098		1983-01-25	McClain et al.	
	81	4372119		1983-02-08	Gillbrand et al.	
	82	4381549		1983-04-26	Stamp, Jr. et al.	
	83	4382367		1983-05-10	Roberts	
	84	4384462		1983-05-24	Overman et al.	
	85	4387368	A	1983-06-07	Day, III et al.	

INFORMATION DISCLOSURE STATEMENT BY APPLICANT (Not for submission under 37 CFR 1.99)		
	Application Number	
	Filing Date	
	First Named Inventor	Jayanth NAGARAJ
	Art Unit	N/A
	Examiner Name	Not Yet Assigned
	Attorney Docket Number	0315-000609/US/COB

	86	4390922		1983-06-28	Pelliccia	
	87	4390321		1983-06-28	Langlois et al.	
	88	4395887		1983-08-02	Sweetman	
	89	4395886		1983-08-02	Mayer	
	90	4399548		1983-08-16	Castleberry	
	91	4406133		1983-09-27	Saunders et al.	
	92	4407138		1983-10-04	Mueller	
	93	4408660		1983-10-11	Sutoh et al.	
	94	4425010		1984-01-10	Bryant et al.	
	95	4429578		1984-02-07	Darrel et al.	
	96	4441329		1984-04-10	Dawley	

INFORMATION DISCLOSURE STATEMENT BY APPLICANT (Not for submission under 37 CFR 1.99)		
	Application Number	
	Filing Date	
	First Named Inventor	Jayanth NAGARAJ
	Art Unit	N/A
	Examiner Name	Not Yet Assigned
	Attorney Docket Number	0315-000609/US/COB

	97	4448038		1984-05-15	Barbier	
	98	4449375		1984-05-22	Briccetti	
	99	4460123		1984-07-17	Beverly	
	100	4463571		1984-08-07	Wiggs	
	101	4465229		1984-08-14	Kompelien	
	102	4467385		1984-08-21	Bandoli et al.	
	103	4467230		1984-08-21	Rovinsky	
	104	4467613		1984-08-28	Behr et al.	
	105	4470092		1984-09-04	Lombardi	
	106	4470266		1984-09-11	Briccetti et al.	
	107	4474024		1984-10-02	Eplett et al.	

INFORMATION DISCLOSURE STATEMENT BY APPLICANT (Not for submission under 37 CFR 1.99)		
	Application Number	
	Filing Date	
	First Named Inventor	Jayanth NAGARAJ
	Art Unit	N/A
	Examiner Name	Not Yet Assigned
	Attorney Docket Number	0315-000609/US/COB

	108	4479389		1984-10-30	Anderson, III et al.	
	109	4489551		1984-12-25	Watanabe et al.	
	110	4495779		1985-01-29	Tanaka et al.	
	111	4497031		1985-01-29	Froehling et al.	
	112	4496296		1985-01-29	Arai et al.	
	113	4498310		1985-02-12	Imanishi et al.	
	114	4499739		1985-02-19	Matsuoka et al.	
	115	4502084		1985-02-26	Hannett	
	116	4502843		1985-03-05	Martin	
	117	4502833		1985-03-05	Hibino et al.	
	118	4502842		1985-03-05	Currier et al.	

INFORMATION DISCLOSURE STATEMENT BY APPLICANT (Not for submission under 37 CFR 1.99)		
	Application Number	
	Filing Date	
	First Named Inventor	Jayanth NAGARAJ
	Art Unit	N/A
	Examiner Name	Not Yet Assigned
	Attorney Docket Number	0315-000609/US/COB

	119	4506518		1985-03-26	Yoshikawa et al.	
	120	4507934		1985-04-02	Tanaka et al.	
	121	4510576		1985-04-09	MacArthur et al.	
	122	4510547		1985-04-09	Rudich, Jr.	
	123	4512161		1985-04-23	Logan et al.	
	124	4516407		1985-05-14	Watabe	
	125	4520674		1985-06-04	Canada et al.	
	126	4523435		1985-06-18	Lord	
	127	4523436		1985-06-18	Schedel et al.	
	128	4527399		1985-07-09	Lord	
	129	4535607		1985-08-20	Mount	

INFORMATION DISCLOSURE STATEMENT BY APPLICANT (Not for submission under 37 CFR 1.99)		
	Application Number	
	Filing Date	
	First Named Inventor	Jayanth NAGARAJ
	Art Unit	N/A
	Examiner Name	Not Yet Assigned
	Attorney Docket Number	0315-000609/US/COB

	130	4538422		1985-09-03	Mount et al.	
	131	4538420		1985-09-03	Nelson	
	132	4539820		1985-09-10	Zinsmeyer	
	133	4545214		1985-10-08	Kinoshita	
	134	4545210		1985-10-08	Lord	
	135	4548549		1985-10-22	Murphy et al.	
	136	4549403		1985-10-29	Lord et al.	
	137	4549404		1985-10-29	Lord	
	138	4555057		1985-11-26	Foster	
	139	4557317		1985-12-10	Harmon, Jr.	
	140	4561260		1985-12-31	Nishi et al.	

INFORMATION DISCLOSURE STATEMENT BY APPLICANT (Not for submission under 37 CFR 1.99)		
	Application Number	
	Filing Date	
	First Named Inventor	Jayanth NAGARAJ
	Art Unit	N/A
	Examiner Name	Not Yet Assigned
	Attorney Docket Number	0315-000609/US/COB

	141	4563624		1986-01-07	Yu	
	142	4563877		1986-01-14	Harnish	
	143	4574871		1986-03-11	Parkinson et al.	
	144	4580947		1986-04-08	Shibata et al.	
	145	4583373		1986-04-22	Shaw	
	146	4589060		1986-05-13	Zinsmeyer	
	147	4598764		1986-07-08	Beckey	
	148	4602484		1986-07-29	Bendikson	
	149	4611470		1986-09-16	Enstrom	
	150	4612775		1986-09-23	Branz et al.	
	151	4614089		1986-09-30	Dorsey	

INFORMATION DISCLOSURE STATEMENT BY APPLICANT (Not for submission under 37 CFR 1.99)		
	Application Number	
	Filing Date	
	First Named Inventor	Jayanth NAGARAJ
	Art Unit	N/A
	Examiner Name	Not Yet Assigned
	Attorney Docket Number	0315-000609/US/COB

	152	4617804		1986-10-21	Fukushima et al.	
	153	4620424		1986-11-04	Tanaka et al.	
	154	4621502		1986-11-11	Ibrahim et al.	
	155	4627483		1986-12-09	Harshbarger, III et al.	
	156	4627245		1986-12-09	Levine	
	157	4627484		1986-12-09	Harshbarger, Jr. et al.	
	158	4630670		1986-12-23	Wellman et al.	
	159	4642034		1987-02-10	Terauchi	
	160	4646532		1987-03-03	Nose	
	161	4649710		1987-03-17	Inoue et al.	
	162	4653285	A	1987-03-31	Pohl	

INFORMATION DISCLOSURE STATEMENT BY APPLICANT (Not for submission under 37 CFR 1.99)		
	Application Number	
	Filing Date	
	First Named Inventor	Jayanth NAGARAJ
	Art Unit	N/A
	Examiner Name	Not Yet Assigned
	Attorney Docket Number	0315-000609/US/COB

	163	4653280		1987-03-31	Hansen et al.	
	164	4655688		1987-04-07	Bohn et al.	
	165	4660386		1987-04-28	Hansen et al.	
	166	4662184		1987-05-05	Pohl et al.	
	167	4674292		1987-06-23	Ohya et al.	
	168	4677830		1987-07-07	Sumikawa et al.	
	169	4680940		1987-07-21	Vaughn	
	170	4682473		1987-07-28	Rogers, III	
	171	4684060		1987-08-04	Adams et al.	
	172	4686835		1987-08-18	Alsenz	
	173	4689967		1987-09-01	Han et al.	

INFORMATION DISCLOSURE STATEMENT BY APPLICANT (Not for submission under 37 CFR 1.99)		
	Application Number	
	Filing Date	
	First Named Inventor	Jayanth NAGARAJ
	Art Unit	N/A
	Examiner Name	Not Yet Assigned
	Attorney Docket Number	0315-000609/US/COB

	174	4697431		1987-10-06	Alsenz	
	175	4698981		1987-10-13	Kaneko et al.	
	176	4698978		1987-10-13	Jones	
	177	4701824		1987-10-20	Beggs et al.	
	178	4706152		1987-11-10	DeFilippis et al.	
	179	4706469		1987-11-17	Oguni et al.	
	180	4712648		1987-12-15	Mattes et al.	
	181	4713717		1987-12-15	Pejouhy et al.	
	182	4715190		1987-12-29	Han et al.	
	183	4720980		1988-01-26	Howland	
	184	4735060		1988-04-05	Alsenz	

INFORMATION DISCLOSURE STATEMENT BY APPLICANT (Not for submission under 37 CFR 1.99)		
	Application Number	
	Filing Date	
	First Named Inventor	Jayanth NAGARAJ
	Art Unit	N/A
	Examiner Name	Not Yet Assigned
	Attorney Docket Number	0315-000609/US/COB

	185	4735054		1988-04-05	Beckey	
	186	4744223		1988-05-17	Umezu	
	187	4745765		1988-05-24	Pettitt	
	188	4745767		1988-05-24	Ohya et al.	
	189	4745766		1988-05-24	Bahr	
	190	4750672		1988-06-14	Beckey et al.	
	191	4750332		1988-06-14	Jenski et al.	
	192	4751825		1988-06-21	Voorhis et al.	
	193	4755957		1988-07-05	White et al.	
	194	4765150		1988-08-23	Persem	
	195	4768348		1988-09-06	Noguchi	

INFORMATION DISCLOSURE STATEMENT BY APPLICANT (Not for submission under 37 CFR 1.99)		
	Application Number	
	Filing Date	
	First Named Inventor	Jayanth NAGARAJ
	Art Unit	N/A
	Examiner Name	Not Yet Assigned
	Attorney Docket Number	0315-000609/US/COB

	196	4790142		1988-12-13	Beckey	
	197	4798055		1989-01-17	Murray et al.	
	198	4805118		1989-02-14	Rishel	
	199	4807445		1989-02-28	Matsuoka et al.	
	200	4831560		1989-05-16	Zaleski	
	201	4829779		1989-05-16	Munson et al.	
	202	4835980		1989-06-06	Oyanagi et al.	
	203	4841734		1989-06-27	Torrence	
	204	4845956		1989-07-11	Berntsen et al.	
	205	4848100		1989-07-18	Barthel et al.	
	206	4848099		1989-07-18	Beckey et al.	

INFORMATION DISCLOSURE STATEMENT BY APPLICANT (Not for submission under 37 CFR 1.99)		
	Application Number	
	Filing Date	
	First Named Inventor	Jayanth NAGARAJ
	Art Unit	N/A
	Examiner Name	Not Yet Assigned
	Attorney Docket Number	0315-000609/US/COB

	207	4850204		1989-07-25	Bos et al.	
	208	4850198		1989-07-25	Helt et al.	
	209	4852363		1989-08-01	Kampf et al.	
	210	4856286		1989-08-15	Sulfstede et al.	
	211	4858676		1989-08-22	Bolfik et al.	
	212	4866944		1989-09-19	Yamazaki	
	213	4869073		1989-09-26	Kawai et al.	
	214	4873836		1989-10-17	Thompson	
	215	4878355		1989-11-07	Beckey et al.	
	216	4881184		1989-11-14	Abegg, III et al.	
	217	4882908		1989-11-28	White	

INFORMATION DISCLOSURE STATEMENT BY APPLICANT (Not for submission under 37 CFR 1.99)		
	Application Number	
	Filing Date	
	First Named Inventor	Jayanth NAGARAJ
	Art Unit	N/A
	Examiner Name	Not Yet Assigned
	Attorney Docket Number	0315-000609/US/COB

	218	4885707		1989-12-05	Nichol et al.	
	219	4884412		1989-12-05	Sellers et al.	
	220	4885914		1989-12-12	Pearman	
	221	4887436		1989-12-19	Enomoto et al.	
	222	4887857		1989-12-19	VanOmmeren	
	223	4889280		1989-12-26	Grald et al.	
	224	4893480		1990-01-16	Matsui et al.	
	225	4899551		1990-02-13	Weintraub	
	226	4903500		1990-02-27	Hanson	
	227	4909041		1990-03-20	Jones	
	228	4909076		1990-03-20	Busch et al.	

INFORMATION DISCLOSURE STATEMENT BY APPLICANT (Not for submission under 37 CFR 1.99)		
	Application Number	
	Filing Date	
	First Named Inventor	Jayanth NAGARAJ
	Art Unit	N/A
	Examiner Name	Not Yet Assigned
	Attorney Docket Number	0315-000609/US/COB

	229	4910966		1990-03-27	Levine et al.	
	230	4913625		1990-04-03	Gerlowski	
	231	4916912		1990-04-17	Levine et al.	
	232	4918932		1990-04-24	Gustafson et al.	
	233	4932588		1990-06-12	Fedter et al.	
	234	4939909		1990-07-10	Tsuchiyama et al.	
	235	4943003		1990-07-24	Shimizu et al.	
	236	4945491		1990-07-31	Rishel	
	237	4944160		1990-07-31	Malone et al.	
	238	4953784		1990-09-04	Yasufuku et al.	
	239	4959970		1990-10-02	Meckler	

INFORMATION DISCLOSURE STATEMENT BY APPLICANT (Not for submission under 37 CFR 1.99)		
	Application Number	
	Filing Date	
	First Named Inventor	Jayanth NAGARAJ
	Art Unit	N/A
	Examiner Name	Not Yet Assigned
	Attorney Docket Number	0315-000609/US/COB

	240	4964060		1990-10-16	Hartsog	
	241	4966006		1990-10-30	Thuesen et al.	
	242	4967567		1990-11-06	Proctor et al.	
	243	4974665		1990-12-04	Zillner, Jr.	
	244	4975024		1990-12-04	Heckel	
	245	4977751		1990-12-18	Hanson	
	246	4985857		1991-01-15	Bajpai et al.	
	247	4987748		1991-01-29	Meckler	
	248	4990057		1991-02-05	Rollins	
	249	4991770		1991-02-12	Bird et al.	
	250	5000009		1991-03-19	Clanin	

INFORMATION DISCLOSURE STATEMENT BY APPLICANT (Not for submission under 37 CFR 1.99)		
	Application Number	
	Filing Date	
	First Named Inventor	Jayanth NAGARAJ
	Art Unit	N/A
	Examiner Name	Not Yet Assigned
	Attorney Docket Number	0315-000609/US/COB

	251	5009076		1991-04-23	Winslow	
	252	5009075		1991-04-23	Okoren	
	253	5018665		1991-05-28	Sulmone	
	254	RE33620		1991-06-25	Persem	
	255	5042264		1991-08-27	Dudley	
	256	5056036		1991-10-08	Van Bork	
	257	5056329		1991-10-15	Wilkinson	
	258	5058388		1991-10-22	Shaw et al.	
	259	5062278		1991-11-05	Sugiyama	
	260	5065593		1991-11-19	Dudley et al.	
	261	5071065		1991-12-10	Aalto et al.	

INFORMATION DISCLOSURE STATEMENT BY APPLICANT (Not for submission under 37 CFR 1.99)		
	Application Number	
	Filing Date	
	First Named Inventor	Jayanth NAGARAJ
	Art Unit	N/A
	Examiner Name	Not Yet Assigned
	Attorney Docket Number	0315-000609/US/COB

	262	5073091		1991-12-17	Burgess et al.	
	263	5073862		1991-12-17	Carlson	
	264	RE33775		1991-12-24	Behr et al.	
	265	5076494		1991-12-31	Ripka	
	266	5076067		1991-12-31	Prenger et al.	
	267	5077983		1992-01-07	Dudley	
	268	5094086		1992-03-10	Shyu	
	269	5095715		1992-03-17	Dudley	
	270	5095712		1992-03-17	Narreau	
	271	5103391		1992-04-07	Barrett	
	272	5109676		1992-05-05	Waters et al.	

INFORMATION DISCLOSURE STATEMENT BY APPLICANT (Not for submission under 37 CFR 1.99)		
	Application Number	
	Filing Date	
	First Named Inventor	Jayanth NAGARAJ
	Art Unit	N/A
	Examiner Name	Not Yet Assigned
	Attorney Docket Number	0315-000609/US/COB

	273	5109700		1992-05-05	Hicho	
	274	5115406		1992-05-19	Zatezalo et al.	
	275	5115644		1992-05-26	Alsenz	
	276	5115643		1992-05-26	Hayata et al.	
	277	5119466		1992-06-02	Suzuki	
	278	5118260		1992-06-02	Fraser, Jr.	
	279	5119637		1992-06-09	Bard et al.	
	280	5121610		1992-06-16	Atkinson et al.	
	281	5123252		1992-06-23	Hanson	
	282	5123255		1992-06-23	Ohizumi	
	283	5123253		1992-06-23	Hanson et al.	

INFORMATION DISCLOSURE STATEMENT BY APPLICANT (Not for submission under 37 CFR 1.99)		
	Application Number	
	Filing Date	
	First Named Inventor	Jayanth NAGARAJ
	Art Unit	N/A
	Examiner Name	Not Yet Assigned
	Attorney Docket Number	0315-000609/US/COB

	284	5141407		1992-08-25	Ramsey et al.	
	285	5142877		1992-09-01	Shimizu	
	286	5167494		1992-12-01	Inagaki et al.	
	287	5170935		1992-12-15	Federspiel et al.	
	288	5170936		1992-12-15	Kubo et al.	
	289	5186014		1993-02-16	Runk	
	290	5200872		1993-04-06	D'Entremont et al.	
	291	5199855		1993-04-06	Nakajima et al.	
	292	5201862		1993-04-13	Pettitt	
	293	5203178		1993-04-20	Shyu	
	294	5209400		1993-05-11	Winslow et al.	

INFORMATION DISCLOSURE STATEMENT BY APPLICANT (Not for submission under 37 CFR 1.99)		
	Application Number	
	Filing Date	
	First Named Inventor	Jayanth NAGARAJ
	Art Unit	N/A
	Examiner Name	Not Yet Assigned
	Attorney Docket Number	0315-000609/US/COB

	295	5209076		1993-05-11	Kauffman et al.	
	296	5219041		1993-06-15	Greve	
	297	5224354		1993-07-06	Ito et al.	
	298	5224835		1993-07-06	Oltman	
	299	5228300		1993-07-20	Shim	
	300	5228307		1993-07-20	Koce	

If you wish to add additional U.S. Patent citation information please click the Add button. Add

U.S.PATENT APPLICATION PUBLICATIONS Remove

Examiner Initial*	Cite No	Publication Number	Kind Code[1]	Publication Date	Name of Patentee or Applicant of cited Document	Pages,Columns,Lines where Relevant Passages or Relevant Figures Appear
	1					

If you wish to add additional U.S. Published Application citation information please click the Add button. Add

FOREIGN PATENT DOCUMENTS Remove

Examiner Initial*	Cite No	Foreign Document Number[3]	Country Code[2] i	Kind Code[4]	Publication Date	Name of Patentee or Applicant of cited Document	Pages,Columns,Lines where Relevant Passages or Relevant Figures Appear	T[5]

INFORMATION DISCLOSURE STATEMENT BY APPLICANT (Not for submission under 37 CFR 1.99)		
	Application Number	
	Filing Date	
	First Named Inventor	Jayanth NAGARAJ
	Art Unit	N/A
	Examiner Name	Not Yet Assigned
	Attorney Docket Number	0315-000609/US/COB

	1	1403467	DE	A1	1969-10-09	Vogtlandgruben Lengenfeld Veb		☐
	2	29723145	DE	U1	1998-04-16	Harting Kgaa		☒
	3	3118638	DE	A1	1982-05-27	Necchi Spa		☒
	4	0060172	EP	A1	1982-09-15	Rdi Realisa Diffusion Ind		☒
	5	0085246	EP	A1	1983-08-10	Sanden Corp		☐
	6	0351272	EP	A1	1990-01-17	Pompes Salmson Sa et al.		☒
	7	0355255	EP	A2	1990-02-28	Oplaender Wilo Werk Gmbh		☒
	8	0453302	EP	A1	1991-10-23	Whitbread & Co Ltd		☐
	9	0877462	EP	A2	1998-11-11	Texas Instruments Inc		☐
	10	1087184	EP	A2	2001-03-28	Mitsubishi Electric Corp		☐
	11	1245912	EP	A2	2002-10-02	Copeland Corp		☐

INFORMATION DISCLOSURE STATEMENT BY APPLICANT (Not for submission under 37 CFR 1.99)		
	Application Number	
	Filing Date	
	First Named Inventor	Jayanth NAGARAJ
	Art Unit	N/A
	Examiner Name	Not Yet Assigned
	Attorney Docket Number	0315-000609/US/COB

	12	2472862	FR	A1	1981-07-03	Carrier Corp		☐
	13	02110242	JP	A	1990-04-23	Mitsubishi Heavy Ind Ltd		☒
	14	02294580	JP	A	1990-12-05	Daikin Ind Ltd		☒
	15	06058273	JP	A	1994-03-01	Daikin Ind Ltd		☒
	16	2002155868	JP	A	2002-05-31	Matsushita Electric Ind Co Ltd		☒
	17	2003176788	JP	A	2003-06-27	Matsushita Electric Ind Co Ltd		☒
	18	2004316504	JP	A	2004-11-11	Hitachi Koki Kk		☒
	19	2006046219	JP	A	2006-02-16	Daikin Ind Ltd		☒
	20	63061783	JP	A	1988-03-17	Susumu Ubukata		☒
	21	1020000025265	KR		2000-05-06	LG Electronics Inc.		☒
	22	1020020041977	KR		2022-06-05	LG Electronics Inc.		☒

INFORMATION DISCLOSURE STATEMENT BY APPLICANT (Not for submission under 37 CFR 1.99)		
	Application Number	
	Filing Date	
	First Named Inventor	Jayanth NAGARAJ
	Art Unit	N/A
	Examiner Name	Not Yet Assigned
	Attorney Docket Number	0315-000609/US/COB

	23	1020040021281	KR		2004-03-10	Samsung Electronics Co. Ltd.		☒
	24	1020060020353	KR		2006-03-06	Samsung Electronics Co. Ltd.		☒
	25	0169147	WO	A1	2001-09-20	Hussmann Corp et al.		☐
	26	0275227	WO	A1	2002-09-26	Hussmann Corp		☐
	27	2005108882	WO	A2	2005-11-17	Copeland Corp et al.		☐
	28	2006025880	WO	A1	2006-03-09	York Int Corp et al.		☐
	29	2009058356	WO	A1	2009-05-07	Emerson Climate Technologies et al.		☐
	30	8806703	WO	A1	1988-09-07	Prestcold Ltd		☐
	31	9718636	WO	A2	1997-05-22	Webtronics Inc et al.		☐
	32	9917066	WO	A1	1999-04-08	Copeland Corp et al.		☐

If you wish to add additional Foreign Patent Document citation information please click the Add button Add

NON-PATENT LITERATURE DOCUMENTS Remove

INFORMATION DISCLOSURE STATEMENT BY APPLICANT (Not for submission under 37 CFR 1.99)		
	Application Number	
	Filing Date	
	First Named Inventor	Jayanth NAGARAJ
	Art Unit	N/A
	Examiner Name	Not Yet Assigned
	Attorney Docket Number	0315-000609/US/COB

Examiner Initials*	Cite No	Include name of the author (in CAPITAL LETTERS), title of the article (when appropriate), title of the item (book, magazine, journal, serial, symposium, catalog, etc), date, pages(s), volume-issue number(s), publisher, city and/or country where published.	T[5]
	1	"A Practical Example of a Building's Automatic Control," cited in First Office Action from the Patent Office of the People's Republic of China dated 6/29/2007, regarding Application No. 200510005907.8, including translation by CCPIT Patent and Trademark Law Office	☒
	2	"Manual for Freezing and Air Conditioning Technology," Fan Jili, Liaoning Science and Technology Press, September 1995 (cited in First Office Action issued by the Chinese Patent Office regarding Application No. 200780030810.X dated 12/25/2009)	☐
	3	"Product Performance Introduction of York Company," cited in First Office Action from the Patent Office of the People's Republic of China dated June 29, 2007 regarding Application No. 200510005907.8, including translation by CCPIT Patent and Trademark Law Office	☒
	4	"Small-type Freezing and Air Conditioning Operation," Chinese State Economy and Trading Committee, China Meteorological Press, March 2003 (cited in First Office Action issued by the Chinese Patent Office regarding Application No. 200780030810.X dated 12/25/2009)	☐
	5	Building Control Unit (BCU) Installation and Operation Manual, Computer Process Controls, 1-28-1998	☐
	6	Building Environmental Control (BEC) Installation and Operation Manual, Computer Process Controls, 1-5-1998	☐
	7	Einstein RX-300 Refrigeration Controller Installation and Operation Manual, Computer Process Controls, 4-1-1998	☐
	8	First Office Action from the Patent Office of the People's Republic of China regarding Application No. 200510005907.8, dated 6/29/2007. Translation provided by CCPIT Patent and Trademark Law Office.	☒
	9	First Office Action issued by the Chinese Patent Office on May 30, 2008 regarding Application No. 200580013451.8. Translation provided by CCPIT Patent and Trademark Law Office.	☒
	10	First Office Action issued by the Chinese Patent Office regarding Application No. 200780030810.X dated 12/25/2009. Translation provided by Unitalen Attorneys at Law.	☒

INFORMATION DISCLOSURE STATEMENT BY APPLICANT (Not for submission under 37 CFR 1.99)		
	Application Number	
	Filing Date	
	First Named Inventor	Jayanth NAGARAJ
	Art Unit	N/A
	Examiner Name	Not Yet Assigned
	Attorney Docket Number	0315-000609/US/COB

	11	First Office Action regarding Chinese Patent Application No. 200780032977.X, dated 9/27/2010. English translation provided by Unitalen Attorneys at Law.	☒
	12	First Office Action regarding Chinese Patent Application No. 201010117657.8, dated 12/29/2010. English translation provided by Unitalen Attorneys at Law.	☒
	13	International Preliminary Report on Patentability for International Application No. PCT/US2008/012362, dated 5/4/2010	☐
	14	International Preliminary Report on Patentability for International Application No. PCT/US2008/012364, dated 5/4/2010	☐
	15	International Preliminary Report on Patentability regarding International Application No. PCT/US2007/019563 dated 3/10/2009	☐
	16	International Search Report for International Application No. PCT/US2005/11154, dated 10/19/2005	☐
	17	International Search Report for International Application No. PCT/US2007/016135 dated 10/22/2007	☐
	18	International Search Report for International Application No. PCT/US2008/012362, dated 2/12/2009	☐
	19	International Search Report for International Application No. PCT/US2008/012364 dated March 13, 2009.	☐
	20	Non-Final Office Action regarding US Application No. 12/261,643, dated 1/27/2011	☐
	21	Office Action regarding US Application No. 11/776,879, dated 9/17/2010	☐

INFORMATION DISCLOSURE STATEMENT BY APPLICANT (Not for submission under 37 CFR 1.99)		
	Application Number	
	Filing Date	
	First Named Inventor	Jayanth NAGARAJ
	Art Unit	N/A
	Examiner Name	Not Yet Assigned
	Attorney Docket Number	0315-000609/US/COB

	22	Office Action regarding US Application No. 11/850,846, dated 8/13/2010	☐
	23	Refrigeration Monitor and Case Control Installation and Operation Manual, Computer Process Controls, 8-12-1999	☐
	24	Second Office action issued by the Chinese Patent Office dated June 19, 2009 regarding Application No. 200510005907.8, translation provided by CCPIT Patent and Trademark Law Office	☒
	25	Second Office Action issued by the Chinese Patent Office on March 6, 2009 regarding Application No. 200580013451.8, translation provided by CCPIT Patent and Trademark Law Office	☒
	26	Second Office Action regarding Chinese Patent Appplication No. 200780030810X, dated 8/4/2010. English translation provided by Unitalen Attorneys at Law.	☒
	27	The International Search Report regarding International Application No. PCT/US2007/019563, dated 1/15/2008.	☐
	28	Third Office Action issued by the Chinese Patent Office on June 19, 2009 regarding Application No. 200580013451.8, translated by CCPIT Patent and Trademark Law Office	☒
	29	Translation of Claims and Abstract of KR Patent Laying-Open No. 2000-0000261; 4 pages	☒
	30	Ultrasite 32 User's Guide, Computer Process Controls, 9-28-1999	☐
	31	Ultrasite User's Guide BCU Supplement, Computer Process Controls, 9-4-1997	☐
	32	Ultrasite User's Guide BEC Supplement, Computer Process Controls, 10-6-1997	☐

INFORMATION DISCLOSURE STATEMENT BY APPLICANT (Not for submission under 37 CFR 1.99)		
	Application Number	
	Filing Date	
	First Named Inventor	Jayanth NAGARAJ
	Art Unit	N/A
	Examiner Name	Not Yet Assigned
	Attorney Docket Number	0315-000609/US/COB

	33	Ultrasite User's Guide RMCC Supplement, Computer Process Controls, 6-9-1997	☐
	34	Written Opinion of the International Searching Authority for International Application No. PCT/US2008/012364 dated March 12, 2009.	☐
	35	Written Opinion of the International Searching Authority regarding International Application No. PCT/US2007/019563	☐

If you wish to add additional non-patent literature document citation information please click the Add button Add

EXAMINER SIGNATURE

Examiner Signature		Date Considered	

*EXAMINER: Initial if reference considered, whether or not citation is in conformance with MPEP 609. Draw line through a citation if not in conformance and not considered. Include copy of this form with next communication to applicant.

[1] See Kind Codes of USPTO Patent Documents at www.USPTO.GOV or MPEP 901.04. [2] Enter office that issued the document, by the two-letter code (WIPO Standard ST.3). [3] For Japanese patent documents, the indication of the year of the reign of the Emperor must precede the serial number of the patent document. [4] Kind of document by the appropriate symbols as indicated on the document under WIPO Standard ST.16 if possible. [5] Applicant is to place a check mark here if English language translation is attached.

(12) INTERNATIONAL APPLICATION PUBLISHED UNDER THE PATENT COOPERATION TREATY (PCT)

(19) World Intellectual Property Organization
International Bureau

(43) International Publication Date
7 May 2009 (07.05.2009)

PCT

(10) International Publication Number
WO 2009/058356 A1

(51) International Patent Classification:
F04B 49/00 (2006.01) *F04B 35/04* (2006.01)
F04B 49/06 (2006.01)

(21) International Application Number:
PCT/US2008/012362

(22) International Filing Date: 31 October 2008 (31.10.2008)

(25) Filing Language: English

(26) Publication Language: English

(30) Priority Data:
60/984,909 2 November 2007 (02.11.2007) US
12/261,677 30 October 2008 (30.10.2008) US

(63) Related by continuation (CON) or continuation-in-part (CIP) to earlier application:
US 12/261,677 (CON)
Filed on 30 October 2008 (30.10.2008)

(71) Applicant *(for all designated States except US)*: **EMERSON CLIMATE TECHNOLOGIES, INC.** [US/US]; 1675 W. Campbell Road, Sidney, Ohio 45365-0669 (US).

(72) Inventors; and
(75) Inventors/Applicants *(for US only)*: **JAYANTH, Nagaraj** [US/US]; 1256 E. Parkwood Street, Sidney, Ohio 45365 (US). **RENKEN, Troy W.** [US/US]; 3711 Fountain Street, Camarillo, California 93012 (US).

(74) Agents: **MALINZAK, Michael** et al.; Harness, Dickey & Pierce, P.L.C., P.O. Box 828, Bloomfield Hills, Michigan 48303 (US).

(81) Designated States *(unless otherwise indicated, for every kind of national protection available)*: AE, AG, AL, AM, AO, AT, AU, AZ, BA, BB, BG, BH, BR, BW, BY, BZ, CA, CH, CN, CO, CR, CU, CZ, DE, DK, DM, DO, DZ, EC, EE, EG, ES, FI, GB, GD, GE, GH, GM, GT, HN, HR, HU, ID, IL, IN, IS, JP, KE, KG, KM, KN, KP, KR, KZ, LA, LC, LK, LR, LS, LT, LU, LY, MA, MD, ME, MG, MK, MN, MW, MX, MY, MZ, NA, NG, NI, NO, NZ, PG, PH, PL, PT, RO, RS, RU, SC, SD, SE, SG, SK, SL, SM, ST, SV, SY, TJ, TM, TN, TR, TT, TZ, UA, UG, UZ, VC, VN, ZA, ZM, ZW.

(84) Designated States *(unless otherwise indicated, for every kind of regional protection available)*: ARIPO (BW, GH, GM, KE, LS, MW, MZ, NA, SD, SL, SZ, TZ, UG, ZM, ZW), Eurasian (AM, AZ, BY, KG, KZ, MD, RU, TJ, TM), European (AT, BE, BG, CH, CY, CZ, DE, DK, EE, ES, FI, FR, GB, GR, HR, HU, IE, IS, IT, LT, LU, LV, MC, MT, NL, NO, PL, PT, RO, SE, SI, SK, TR), OAPI (BF, BJ, CF, CG, CI, CM, GA, GN, GQ, GW, ML, MR, NE, SN, TD, TG).

Published:
— *with international search report*

(54) Title: COMPRESSOR SENSOR MODULE

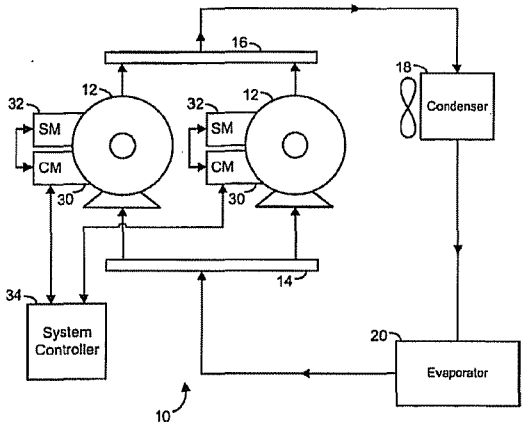

FIG 1

(57) Abstract: A sensor module for a compressor, having an electric motor operating at a first voltage, the sensor module operating at a second voltage, is provided. The sensor module includes a plurality of inputs connected to a plurality of sensors that generate a plurality of operating signals associated with operating conditions of the compressor. A processor is connected to the plurality of inputs and records multiple operating condition measurements from the plurality of operating signals. A communication port is connected to the processor for communicating said operating condition measurements to a control module that controls the compressor. The processor is disposed within an electrical enclosure of the compressor, the electrical enclosure being configured to house electrical terminals for connecting a power supply to the electric motor. The second voltage is less than said first voltage.

WO 2009/058356 A1

COMPRESSOR SENSOR MODULE

CROSS-REFERENCE TO RELATED APPLICATIONS

[0001] This application claims the benefit of U.S. Utility Application 12/261,677 filed on October 30, 2008 and U.S. Provisional Application No. 60/984,909 filed on November 2, 2007. The entire disclosure of the above applications is incorporated herein by reference.

FIELD

[0002] The present disclosure relates to compressors, and more particularly, to a compressor sensor module.

BACKGROUND

[0003] The statements in this section merely provide background information related to the present disclosure and may not constitute prior art.

[0004] Compressors are used in a variety of industrial and residential applications to circulate refrigerant within a refrigeration, heat pump, HVAC, or chiller system (generically "refrigeration systems") to provide a desired heating or cooling effect. In each application, it is desirable for the compressor to provide consistent and efficient operation to ensure that the refrigeration system functions properly. To this end, it is desirable to monitor data received from various sensors that continually measure various operating parameters of the compressor. Electrical sensors may monitor electrical power. Pressure sensors may monitor compressor suction and discharge pressure. Temperature sensors may monitor compressor suction and discharge temperatures as well as ambient temperature. In addition, temperature sensors may monitor an electric motor temperature or an oil temperature of the compressor. Further sensors may monitor oil level and oil pressure of the compressor.

[0005] Electrical power is delivered to the electric motor of the compressor by a power supply. For example three phase high voltage power may be used.

SUMMARY

[0006] A sensor module is provided for a compressor having an electric motor operating at a first voltage. The sensor module may operate at a second voltage and may comprise a plurality of inputs connected to a plurality of sensors that may generate a plurality of operating signals associated with operating conditions of the compressor. The sensor module may also comprise a processor connected to the plurality of inputs that records multiple operating condition measurements from the plurality of operating signals and a communication port connected to the processor for communicating the operating condition measurements to a control module that controls the compressor. The processor may be disposed within an electrical enclosure of the compressor, with the electrical enclosure being configured to house electrical terminals for connecting a power supply operating at the first voltage to the electric motor and with the second voltage being less than the first voltage.

[0007] In other features, a transformer may be located within the electrical enclosure and may generate the second voltage from the power supply.

[0008] In other features, the processor may be disposed within a tamper-resistant enclosure within the electrical enclosure.

[0009] In other features, the plurality of sensors may include a voltage sensor that may generate a voltage signal corresponding to a sensed voltage of the power supply.

[0010] In other features, the plurality of sensors may include a current sensor that may generate a current signal corresponding to a sensed current of the power supply.

[0011] In other features, the plurality of sensors may include a discharge temperature sensor that generates a discharge temperature signal corresponding to a discharge temperature of the compressor and/or a suction temperature sensor that generates a suction temperature signal corresponding to a suction temperature of the compressor.

[0012] In other features, the plurality of sensors may include a discharge pressure sensor that may generates a discharge pressure signal

corresponding to a discharge pressure of the compressor and/or a suction pressure sensor that may generate a suction pressure signal corresponding to a suction pressure of the compressor.

[0013] In other features, the plurality of sensors may include at least one electric motor temperature sensor that may generate an electric motor temperature signal corresponding to a temperature of the electric motor of the compressor.

[0014] In other features, the plurality of sensors may include an oil temperature sensor that may generate an oil temperature signal corresponding to a temperature of oil of the compressor, an oil level sensor that may generate an oil level signal corresponding to an oil level of the compressor, and an oil pressure sensor that may generate an oil pressure signal corresponding to an oil pressure of the compressor.

[0015] In other features, the second voltage may be between 18 volts and 30 volts.

[0016] In other features, the second voltage may be 24 volts.

[0017] Another sensor module for a compressor having an electric motor connected to a three phase power supply is provided. The sensor module may be powered by single phase power derived from the three phase power supply. The sensor module may comprise a plurality of inputs connected to a plurality of sensors that may generate a plurality of operating signals associated with operating conditions of the compressor, a processor connected to the plurality of inputs that records multiple operating condition measurements from the plurality of operating signals, and a communication port connected to the processor for communicating the operating condition measurements to a control module that controls the compressor. The processor may be disposed within an electrical enclosure of the compressor and the electrical enclosure may be configured to house electrical terminals for connecting the power supply to the electric motor. An operating voltage of the single phase power may be less than an operating voltage of the three phase power.

[0018] In other features, the processor may be disposed within a tamper-resistant enclosure within the electrical enclosure.

[0019] In other features, a transformer may be connected to the three phase power supply to generate the single phase power. The transformer may be located within the electrical enclosure.

[0020] In other features, the plurality of sensors may include a first voltage sensor that may generate a first voltage signal corresponding to a voltage of a first phase of the three phase power supply, a second voltage sensor that may generate a second voltage signal corresponding to a voltage of a second phase of the three phase power supply, and a third voltage sensor that may generate a third voltage signal corresponding to a voltage of a third phase of the three phase power supply.

[0021] In other features, the plurality of sensors may include a current sensor that may generate a current signal corresponding to a current of one of the first, second, and third phases the three phase power supply.

[0022] In other features, the operating voltage of the single phase power may be between 18 volts and 30 volts.

[0023] In other features, the operating voltage of the single phase power may be 24 volts.

[0024] A method for a sensor module with a processor disposed within an electrical enclosure of a compressor having an electric motor, the electrical enclosure being configured to house electrical terminals for connecting the electric motor to a power supply at a first operating voltage, is also provided. The method may comprise connecting the sensor module to a transformer for generating a second operating voltage from the power supply, the first operating voltage being higher than the second operating voltage, connecting the electrical terminals to the power supply operating at the first operating voltage, receiving voltage measurements of the power supply from a voltage sensor connected to the sensor module, receiving current measurements of the power supply from a current sensor connected to the sensor module, and communicating operating information based on the current and voltage measurements to a control module connected to the sensor module via a communication port of the sensor module.

[0025] In other features, the method may further comprise receiving a temperature associated with the compressor from a temperature sensor

connected to the sensor module and communicating operating information based on the temperature to the control module. The temperature may include a suction temperature of the compressor, a discharge temperature of the compressor, an ambient temperature, an oil temperature of the compressor, and/or an electric motor temperature of the compressor.

[0026] In other features, the method may further comprise receiving a pressure associated with the compressor from a pressure sensor connected to the sensor module and communicating operating information based on the pressure to the control module. The pressure may include a suction pressure of the compressor and/or a discharge pressure of the compressor.

[0027] A system is also provided that may comprise a compressor having an electric motor operating at a first voltage, a control module that controls the compressor, and a sensor module operating at a second voltage. The sensor module may have a plurality of inputs connected to a plurality of sensors that generate a plurality of operating signals associated with operating conditions of the compressor, a processor connected to the plurality of inputs that records multiple operating condition measurements from the plurality of operating signals, and a communication port connected to the processor for communicating the operating condition measurements to the control module. The processor may be disposed within an electrical enclosure of the compressor. The electrical enclosure may be configured to house electrical terminals for connecting a power supply operating at the first voltage to the electric motor. The second voltage may be less than the first voltage.

[0028] In other features, the system may further comprise a transformer located within the electrical enclosure that generates the second voltage from the power supply.

[0029] In other features, the processor may be disposed within a tamper-resistant enclosure within the electrical enclosure.

[0030] In other features, the plurality of sensors may include a voltage sensor that generates a voltage signal corresponding to a sensed voltage of the power supply.

[0031] In other features, the plurality of sensors may include a current sensor that may generate a current signal corresponding to a sensed current of the power supply.

[0032] In other features, the plurality of sensors may include a discharge temperature sensor that may generate a discharge temperature signal corresponding to a discharge temperature of the compressor and/or a suction temperature sensor that may generate a suction temperature signal corresponding to a suction temperature of the compressor.

[0033] In other features, the plurality of sensors may include a discharge pressure sensor that may generate a discharge pressure signal corresponding to a discharge pressure of the compressor and/or a suction pressure sensor that generates a suction pressure signal corresponding to a suction pressure of the compressor.

[0034] In other features, the plurality of sensors may include at least one electric motor temperature sensor that may generate an electric motor temperature signal corresponding to a temperature of the electric motor of the compressor.

[0035] In other features, the plurality of sensors may include an oil temperature sensor that may generate an oil temperature signal corresponding to a temperature of oil of the compressor, an oil level sensor that may generate an oil level signal corresponding to an oil level of the compressor, and/or an oil pressure sensor that may generate an oil pressure signal corresponding to an oil pressure of the compressor.

[0036] In other features, the second voltage may be between 18 volts and 30 volts.

[0037] In other features, the second voltage may be 24 volts.

[0038] Another system is provided that may comprise a compressor having an electric motor connected to a three phase power supply, a control module that controls the compressor, and a sensor module powered by single phase power derived from the three phase power supply. The sensor module may have a plurality of inputs connected to a plurality of sensors that generate a plurality of operating signals associated with operating conditions of the

compressor, a processor connected to the plurality of inputs that records multiple operating condition measurements from the plurality of operating signals, and a communication port connected to the processor for communicating the operating condition measurements to a control module that controls the compressor. The processor may be disposed within an electrical enclosure of the compressor. The electrical enclosure may be configured to house electrical terminals for connecting the power supply to the electric motor. An operating voltage of the single phase power may be less than an operating voltage of the three phase power.

[0039] In other features, the processor may be disposed within a tamper-resistant enclosure within the electrical enclosure.

[0040] In other features, a transformer may be connected to the three phase power supply to generate the single phase power. The transformer may be located within the electrical enclosure.

[0041] In other features, the plurality of sensors may include a first voltage sensor that may generate a first voltage signal corresponding to a voltage of a first phase of the three phase power supply, a second voltage sensor that may generate a second voltage signal corresponding to a voltage of a second phase of the three phase power supply, and a third voltage sensor that generates a third voltage signal corresponding to a voltage of a third phase of the three phase power supply.

[0042] In other features, the plurality of sensors may include a current sensor that may generate a current signal corresponding to a current of one of the first, second, and third phases the three phase power supply.

[0043] In other features, the operating voltage of the single phase power may be between 18 volts and 30 volts.

[0044] In other features, the operating voltage of the single phase power may be 24 volts.

[0045] Further areas of applicability will become apparent from the description provided herein. It should be understood that the description and specific examples are intended for purposes of illustration only and are not intended to limit the scope of the present disclosure.

DRAWINGS

[0046] The drawings described herein are for illustration purposes only and are not intended to limit the scope of the present disclosure in any way.

[0047] Figure 1 is a schematic view of a refrigeration system;

[0048] Figure 2 is a schematic view of a compressor;

[0049] Figure 3 is a schematic view of an electrical enclosure of a compressor including a sensor module;

[0050] Figure 4 is a flow chart illustrating an operating algorithm of a sensor module;

[0051] Figure 5 is a perspective view of a compressor; and

[0052] Figure 6 is a top view of a compressor.

DETAILED DESCRIPTION

[0053] The following description is merely exemplary in nature and is not intended to limit the present disclosure, application, or uses. It should be understood that throughout the drawings, corresponding reference numerals indicate like or corresponding parts and features.

[0054] As used herein, the terms module, control module, and controller refer to one or more of the following: an application specific integrated circuit (ASIC), an electronic circuit, a processor (shared, dedicated, or group) and memory that execute one or more software or firmware programs, a combinational logic circuit, or other suitable components that provide the described functionality. Further, as used herein, computer-readable medium refers to any medium capable of storing data for a computer. Computer-readable medium may include, but is not limited to, memory, RAM, ROM, PROM, EPROM, EEPROM, flash memory, punch cards, dip switches, CD-ROM, floppy disk, magnetic tape, other magnetic medium, optical medium, or any other device or medium capable of storing data for a computer.

[0055] With reference to Figure 1, an exemplary refrigeration system 10 may include a plurality of compressors 12 piped together with a common suction manifold 14 and a discharge header 16. Compressor 12 may be a

reciprocating compressor, a scroll type compressor, or another type compressor, Compressor 12 may include a crank case. The compressors 12 may be equipped with electric motors to compress refrigerant vapor that is delivered to a condenser 18 where the refrigerant vapor is liquefied at high pressure, thereby rejecting heat to the outside air. The liquid refrigerant exiting the condenser 18 is delivered to an evaporator 20. As hot air moves across the evaporator, the liquid turns into gas, thereby removing heat from the air and cooling a refrigerated space. This low pressure gas is delivered to the compressors 12 and again compressed to a high pressure gas to start the refrigeration cycle again. While a refrigeration system 10 with two compressors 12, a condenser 18, and an evaporator 20 is shown in Figure 1, a refrigeration system 10 may be configured with any number of compressors 12, condensers 18, evaporators 20, or other refrigeration system components.

[0056] Each compressor 12 may be equipped with a control module (CM) 30 and a sensor module (SM) 32. SM 32 may monitor operating conditions of compressor 12 via communication with various operating condition sensors. For example, CM 30 may be connected to electrical voltage sensors, electrical current sensors, discharge temperature sensors, discharge pressure sensors, suction temperature sensors, suction pressure sensors, ambient temperature sensors, electric motor temperature sensors, compressor oil temperature sensors, compressor oil level sensors, compressor oil pressure sensors, and other compressor operating condition sensors.

[0057] With reference to Figure 2, three phase AC electric power 50 may be delivered to compressor 12 to operate an electric motor. SM 32 and CM 30 may receive low voltage power from one of the phases of electric power 50 delivered to compressor 12. For example, a transformer 49 may convert electric power 51 from one of the phases to a lower voltage for delivery to SM 32 and CM 30. In this way, SM 32 and CM 30 may operate on single phase AC electric power at a lower voltage than electric power 50 delivered to compressor 12. For example, electric power delivered to SM 32 and CM 30 may be 24V AC. When low voltage power, for example 24 V AC, is used to power CM 30 and SM 32,

lower voltage rated components, such as lower voltage wiring connections, may be used.

[0058] CM 30 may control operation of the compressor 12 based on data received from SM 32, based on other compressor and refrigeration system data received from other compressor and refrigeration system sensors, and based on communication with a system controller 34. For example, CM 30 may be a protection and control system of the type disclosed in assignee's commonly-owned U.S. Patent Application No. 11/059,646, Publication No. 2005/0235660, filed February 16, 2005, the disclosure of which is incorporated herein by reference. Other suitable protection and control type systems may be used.

[0059] By communicating with SM 32, CM 30 may monitor the various operating parameters of the compressor 12 and control operation of the compressor 12 according to protection and control algorithms and based on communication with system controller 34. CM 30 may activate and deactivate compressor 12 according to a set-point, such as a suction pressure, suction temperature, discharge pressure, or discharge temperature set-point. In the case of discharge pressure set-point, CM 30 may activate compressor 12 when discharge pressure, as determined by a discharge pressure sensor connected to SM 32, falls below the discharge pressure set-point. CM 30 may deactivate the compressor 12 when the discharge pressure rises above the discharge pressure set-point.

[0060] In this way, SM 32 may be specific to compressor 12 and may be located within an electrical enclosure 72 of compressor 12 for housing electrical connections to compressor 12 (shown in Figures 3, 5, and 6) at the time of manufacture of compressor 12. CM 30 may be installed on compressor 12 after manufacture and at the time compressor 12 is installed at a particular location in a particular refrigeration system, for example. Different control modules may be manufactured by different manufacturers. However, each CM 30 may be designed and configured to communicate with SM 32. In other words, SM 32 for a particular compressor 12 may provide data and signals that can be communicated to any control module appropriately configured to communicate with SM 32. Further, manufacturers of different control modules may configure a control module to

receive data and signals from SM 32 without knowledge of the algorithms and computations employed by SM 32 to provide the data and signals.

[0061] System controller 34 may be used and configured to control the overall operation of the refrigeration system. System controller 34 is preferably an Einstein Area Controller offered by CPC, Inc. of Atlanta, Georgia, or any other type of programmable controller that may be programmed to operate refrigeration system 10 and communicate with CM 30. System controller 34 may monitor refrigeration system operating conditions, such as condenser temperatures and pressures, and evaporator temperatures and pressures, as well as environmental conditions, such as ambient temperature, to determine refrigeration system load and demand. System controller 34 may communicate with CM 30 to adjust set-points based on such operating conditions to maximize efficiency of the refrigeration system. System controller 34 may evaluate efficiency of compressor 12 based on the operating data communicated to CM 30 from SM 32.

[0062] SM 32 may be connected to three voltage sensors 54, 56, 58, for sensing voltage of each phase of electric power 50 delivered to compressor 12. In addition, SM 32 may be connected to a current sensor 60 for sensing electric current of one of the phases of electric power 50 delivered to compressor 12. Current sensor 60 may be a current transformer or current shunt resistor.

[0063] When a single current sensor 60 is used, electric current for the other phases may be estimated based on voltage measurements and based on the current measurement from current sensor 60. Because the load for each winding of the electric motor may be substantially the same as the load for each of the other windings, because the voltage for each phase is known from measurement, and because the current for one phase is known from measurement, current in the remaining phases may be estimated.

[0064] Additional current sensors may also be used and connected to SM 32. For example, two current sensors may be used to sense electric current for two phases of electric power 50. When two current sensors are used, electric current for the remaining phase may be estimated based on voltage measurements and based on the current measurements from current sensors.

Additionally, three current sensors may be used to sense electric current for all three phases of electric power.

[0065] In the case of a dual winding three phase electric motor, six electrical power terminals may be used, with one terminal for each winding resulting in two terminals for each of the three phases of electric power 50. In such case, a voltage sensor may be included for each of the six terminals, with each of the six voltage sensors being in communication with SM 32. In addition, a current sensor may be included for one or more of the six electrical connections.

[0066] With reference to Figures 5 and 6, CM 30 and SM 32 may be mounted on or within compressor 12. CM 30 may include a display 70 for graphically displaying alerts or messages. As discussed above, SM 32 may be located within electrical enclosure 72 of compressor 12 for housing electrical connections to compressor 12.

[0067] Compressor 12 may include a suction nozzle 74, a discharge nozzle 76, and an electric motor disposed within an electric motor housing 78.

[0068] Electric power 50 may be received by electrical enclosure 72. CM 30 may be connected to SM 32 through a housing 80. In this way, CM 30 and SM 32 may be located at different locations on or within compressor 12, and may communicate via a communication connection routed on, within, or through compressor 12, such as a communication connection routed through housing 80.

[0069] With reference to Figure 3, SM 32 may be located within electrical enclosure 72. In Figure 3, a schematic view of electrical enclosure 72 and SM 32 is shown. SM 32 may include a processor 100 with RAM 102 and ROM 104 disposed on a printed circuit board (PCB)106. Electrical enclosure 72 may be an enclosure for housing electrical terminals 108 connected to an electric motor of compressor 12. Electrical terminals 108 may connect electric power 50 to the electric motor of compressor 12.

[0070] Electrical enclosure 72 may include a transformer 49 for converting electric power 50 to a lower voltage for use by SM 32 and CM 30. For example, electric power 51 may be converted by transformer 49 and delivered to SM 32. SM 32 may receive low voltage electric power from

transformer 49 through a power input 110 of PCB 106. Electric power may also be routed through electrical enclosure 72 to CM 30 via electrical connection 52.

[0071] Voltage sensors 54, 56, 58 may be located proximate each of electrical terminals 108. Processor 100 may be connected to voltage sensors 54, 56, 58 and may periodically receive or sample voltage measurements. Likewise, current sensor 60 may be located proximate one of electrical power leads 116. Processor 100 may be connected to current sensor 60 and may periodically receive or sample current measurements. Electrical voltage and current measurements from voltage sensors 54, 56, 58 and from current sensor 60 may be suitably scaled for the processor 100.

[0072] A discharge temperature sensor 150 may be connected to the processor 100 and may generate a discharge temperature signal corresponding to a discharge temperature of the compressor (T_D). A suction temperature sensor 152 may be connected to the processor and may generate a suction temperature signal corresponding to a suction temperature of the compressor (T_S). A discharge pressure sensor 154 may be connected to the processor 100 and may generate a discharge pressure signal corresponding to a discharge pressure of the compressor (P_D). A suction pressure sensor 156 may be connected to the processor 100 and may generate a suction pressure signal corresponding to a suction pressure of the compressor (P_S). An ambient temperature sensor 158 may be connected to the processor 100 and may generate an ambient temperature signal corresponding to an ambient temperature of the compressor (T_{amb}). An electric motor temperature sensor 160 may be connected to the processor 100 and may generate an electric motor temperature signal corresponding to an electric motor temperature of the compressor (T_{mtr}). An Oil level sensor 161 may be connected to processor 100 and may generate an oil level signal corresponding to a level of oil in compressor 12 (Oil_{lev}). An Oil temperature sensor may be connected to processor 100 and may generate an oil temperature signal corresponding to a temperature of oil in compressor 12 (Oil_{Temp}).

[0073] PCB 106 may include a communication port 118 to allow communication between processor 100 of SM 32 and CM 30. A communication

link between SM 32 and CM 30 may include an optical isolator 119 to electrically separate the communication link between SM 32 and CM 30 while allowing communication. Optical isolator 119 may be located within electrical enclosure 72. Although optical isolator 119 is independently shown, optical isolator 119 may also be located on PCB 106. At least one additional communication port 120 may also be provided for communication between SM 32 and other devices. A handheld or portable device may directly access and communicate with SM 32 via communication port 120. For example, communication port 120 may allow for in-circuit programming of SM 32 a device connected to communication port 120. Additionally, communication port 120 may be connected to a network device for communication with SM 32 across a network.

[0074] Communication with SM 32 may be made via any suitable communication protocol, such as I2C, serial peripheral interface (SPI), RS232, RS485, universal serial bus (USB), or any other suitable communication protocol.

[0075] Processor 100 may access compressor configuration and operating data stored in an embedded ROM 124 disposed in a tamper resistant housing 140 within electrical enclosure 72. Embedded ROM 124 may be a compressor memory system disclosed in assignee's commonly-owned U.S. Patent Application No. 11/405,021, filed April 14, 2006, U.S. Patent Application No. 11/474,865, filed June 26, 2006, U.S. Patent Application No. 11/474,821, filed June 26, 2006, U.S. Patent Application No. 11/474,798, filed June 26, 2006, or U.S. Patent Application No. 60/674,781, filed April 26, 2005, the disclosures of which are incorporated herein by reference. In addition, other suitable memory systems may be used.

[0076] Relays 126, 127 may be connected to processor 100. Relay 126 may control activation or deactivation of compressor 12. When SM 32 determines that an undesirable operating condition exists, SM 32 may simply deactivate compressor 12 via relay 126. Alternatively, SM 32 may notify CM 30 of the condition so that CM 30 may deactivate the compressor 12. Relay 127 may be connected to a compressor related component. For example, relay 127 may be connected to a crank case heater. SM 32 may activate or deactivate the crank

case heater as necessary, based on operating conditions or instructions from CM 30 or system controller 34. While two relays 126, 127 are shown, SM 32 may, alternatively, be configured to operate one relay, or more than two relays.

[0077] Processor 100 and PCB 106 may be mounted within a housing enclosure 130. Housing enclosure 130 may be attached to or embedded within electrical enclosure 72. Electrical enclosure 72 provides an enclosure for housing electrical terminals 108. Housing enclosure 130 may be tamper-resistant such that a user of compressor 12 may be unable to inadvertently or accidentally access processor 100 and PCB 106. In this way, SM 32 may remain with compressor 12, regardless of whether compressor 12 is moved to a different location, returned to the manufacturer for repair, or used with a different CM 30.

[0078] LED's 131, 132 may be located on, or connected to, PCB 106 and controlled by processor 100. LED's 131, 132 may indicate status of SM 32 or an operating condition of compressor 12. LED's 131, 132 may be located on housing enclosure 130 or viewable through housing enclosure 130. For example, LED 131 may be red and LED 132 may be green. SM 32 may light green LED 132 to indicate normal operation. SM 32 may light red LED 131 to indicate a predetermined operating condition. SM 32 may also flash the LED's 131, 132 to indicate other predetermined operating conditions.

[0079] Additional current sensors may also be used and connected to SM 32. Two current sensors may be used to sense electric current for two phases of electric power 50. When two current sensors are used, electric current for the remaining phase may be estimated based on voltage measurements and based on the current measurements from current sensors. Three current sensors may be used to sense electric current for all three phases of electric power 50.

[0080] In the case of a dual winding three phase electric motor, electrical enclosure 72 may include additional electrical terminals for additional windings. In such case, six electrical terminals may be located within electrical enclosure 72. Three electrical terminals 108 may be connected to the three phases of electric power 50 for a first set of windings of the electric motor of compressor 12. Three additional electrical terminals may also connected to the

three phases of electric power 50 for a second set of windings of the electric motor of compressor 12. Voltage sensors may be located proximate each of the additional electrical terminals. Processor 100 may be connected to the additional voltage sensors and may periodically receive or sample voltage and current measurements. For example, processor 100 may sample current and voltage measurements twenty times per cycle or approximately once every millisecond in the case of alternating current with a frequency of sixty mega-hertz.

[0081] Referring now to Figure 4, a flow chart illustrating an operating algorithm 400 for SM 32 is shown. In step 401, SM 32 may initialize. Initialization may include resetting any counters or timers, checking and initializing RAM 102, initializing any ports, including communication ports 118, enabling communication with other devices, including CM 30, checking ROM 104 on PCB 106, checking other ROM 124 such as an embedded memory system, and any other necessary initialization functions. SM 32 may load operating instructions from ROM 104 for execution by the processor 100.

[0082] In step 402, SM 32 may receive actual electrical measurements from connected voltage and current sensors 54, 56, 58, 60. SM 32 may receive a plurality of instantaneous voltage and current measurements over the course of a cycle of the AC electrical power. SM 32 may buffer instantaneous voltage and current measurements in RAM 102 for a predetermined time period.

[0083] In step 404, SM 32 may receive measurements from sensors 150, 152, 154, 156, 158, 160, 161, 163. SM 32 may buffer the instantaneous temperature and pressure measurements in RAM 102 for a predetermined time period.

[0084] In step 406, SM 32 may communicate electrical, temperature, and pressure measurements to CM 30. Alternatively, SM 32 may communicate electrical, temperature, and pressure measurements to a system controller 34 or to another communication device, such as a handheld device, connected to a communication port 120.

[0085] After communicating data in step 406, SM 32 may loop back to step 402 for continued monitoring and communication.

[0086] In this way, SM 32 may thereby provide efficient and accurate operating condition measurements of the compressor to be utilized by other modules and by users to evaluate operating conditions and efficiency of the compressor.

CLAIMS

What is claimed is:

1. A sensor module for a compressor having an electric motor operating at a first voltage, the sensor module operating at a second voltage and comprising:

a plurality of inputs connected to a plurality of sensors that generate a plurality of operating signals associated with operating conditions of said compressor;

a processor connected to said plurality of inputs that records multiple operating condition measurements from said plurality of operating signals; and

a communication port connected to said processor for communicating said operating condition measurements to a control module that controls said compressor;

wherein said processor is disposed within an electrical enclosure of said compressor, said electrical enclosure being configured to house electrical terminals for connecting a power supply operating at said first voltage to said electric motor and wherein said second voltage is less than said first voltage.

2. The sensor module of claim 1 wherein a transformer located within said electrical enclosure generates said second voltage from said power supply.

3. The sensor module of claim 1 wherein said processor is disposed within a tamper-resistant enclosure within said electrical enclosure.

4. The sensor module of claim 1 wherein said plurality of sensors includes a voltage sensor that generates a voltage signal corresponding to a sensed voltage of said power supply.

5. The sensor module of claim 1 wherein said plurality of sensors includes a current sensor that generates a current signal corresponding to a sensed current of said power supply.

6. The sensor module of claim 1 wherein said plurality of sensors includes at least one of a discharge temperature sensor that generates a discharge temperature signal corresponding to a discharge temperature of said compressor and a suction temperature sensor that generates a suction temperature signal corresponding to a suction temperature of said compressor.

7. The sensor module of claim 1 wherein said plurality of sensors includes at least one of a discharge pressure sensor that generates a discharge pressure signal corresponding to a discharge pressure of said compressor and a suction pressure sensor that generates a suction pressure signal corresponding to a suction pressure of said compressor.

8. The sensor module of claim 1 wherein said plurality of sensors includes at least one electric motor temperature sensor that generates an electric motor temperature signal corresponding to a temperature of said electric motor of said compressor.

9. The sensor module of claim 1 wherein said plurality of sensors includes at least one of an oil temperature sensor that generates an oil temperature signal corresponding to a temperature of oil of said compressor, an oil level sensor that generates an oil level signal corresponding to an oil level of said compressor, and an oil pressure sensor that generates an oil pressure signal corresponding to an oil pressure of said compressor.

10. The sensor module of claim 1 wherein said second voltage is between 18 volts and 30 volts.

11. The sensor module of claim 1 wherein said second voltage is 24 volts.

12. A sensor module for a compressor having an electric motor connected to a three phase power supply, the sensor module being powered by single phase power derived from said three phase power supply, the sensor module comprising:

a plurality of inputs connected to a plurality of sensors that generate a plurality of operating signals associated with operating conditions of said compressor;

a processor connected to said plurality of inputs that records multiple operating condition measurements from said plurality of operating signals; and

a communication port connected to said processor for communicating said operating condition measurements to a control module that controls said compressor;

wherein said processor is disposed within an electrical enclosure of said compressor, said electrical enclosure being configured to house electrical terminals for connecting said power supply to said electric motor and wherein an operating voltage of said single phase power is less than an operating voltage of said three phase power.

13. The sensor module of claim 12 wherein said processor is disposed within a tamper-resistant enclosure within said electrical enclosure.

14. The sensor module of claim 12 wherein a transformer is connected to said three phase power supply to generate said single phase power and wherein said transformer is located within said electrical enclosure.

15. The sensor module of claim 12 wherein said plurality of sensors includes a first voltage sensor that generates a first voltage signal corresponding to a voltage of a first phase of said three phase power supply, a second voltage

sensor that generates a second voltage signal corresponding to a voltage of a second phase of said three phase power supply, and a third voltage sensor that generates a third voltage signal corresponding to a voltage of a third phase of said three phase power supply.

16. The sensor module of claim 15 wherein said plurality of sensors includes a current sensor that generates a current signal corresponding to a current of one of said first, second, and third phases said three phase power supply.

17. The sensor module of claim 12 wherein said operating voltage of said single phase power is between 18 volts and 30 volts.

18. The sensor module of claim 17 wherein said operating voltage of said single phase power is 24 volts.

19. For a sensor module with a processor disposed within an electrical enclosure of a compressor having an electric motor, said electrical enclosure being configured to house electrical terminals for connecting said electric motor to a power supply at a first operating voltage, a method comprising:

connecting said sensor module to a transformer for generating a second operating voltage from said power supply, said first operating voltage being higher than said second operating voltage ;

connecting said electrical terminals to said power supply operating at said first operating voltage;

receiving voltage measurements of said power supply from a voltage sensor connected to said sensor module;

receiving current measurements of said power supply from a current sensor connected to said sensor module;

communicating operating information based on said current and voltage measurements to a control module connected to said sensor module via a communication port of said sensor module.

20. The method of claim 19 further comprising:

receiving a temperature associated with said compressor from a temperature sensor connected to said sensor module;

communicating operating information based on said temperature to said control module;

wherein said temperature includes at least one of: a suction temperature of said compressor, a discharge temperature of said compressor, an ambient temperature, an oil temperature of said compressor, and an electric motor temperature of said compressor.

21. The method of claim 19 further comprising:

receiving a pressure associated with said compressor from a pressure sensor connected to said sensor module;

communicating operating information based on said pressure to said control module;

wherein said pressure includes at least one of: a suction pressure of said compressor and a discharge pressure of said compressor.

22. A system comprising:

a compressor having an electric motor operating at a first voltage;

a control module that controls said compressor; and

a sensor module operating at a second voltage, said sensor module having a plurality of inputs connected to a plurality of sensors that generate a plurality of operating signals associated with operating conditions of said compressor, a processor connected to said plurality of inputs that records multiple operating condition measurements from said plurality of operating signals; and a communication port connected to said processor for communicating said operating condition measurements to said control module;

wherein said processor is disposed within an electrical enclosure of said compressor, said electrical enclosure being configured to house electrical

terminals for connecting a power supply operating at said first voltage to said electric motor and wherein said second voltage is less than said first voltage.

23. The system of claim 22 further comprising a transformer located within said electrical enclosure that generates said second voltage from said power supply.

24. The system of claim 22 wherein said processor is disposed within a tamper-resistant enclosure within said electrical enclosure.

25. The system of claim 22 wherein said plurality of sensors includes a voltage sensor that generates a voltage signal corresponding to a sensed voltage of said power supply.

26. The system of claim 22 wherein said plurality of sensors includes a current sensor that generates a current signal corresponding to a sensed current of said power supply.

27. The system of claim 22 wherein said plurality of sensors includes at least one of a discharge temperature sensor that generates a discharge temperature signal corresponding to a discharge temperature of said compressor and a suction temperature sensor that generates a suction temperature signal corresponding to a suction temperature of said compressor.

28. The system of claim 22 wherein said plurality of sensors includes at least one of a discharge pressure sensor that generates a discharge pressure signal corresponding to a discharge pressure of said compressor and a suction pressure sensor that generates a suction pressure signal corresponding to a suction pressure of said compressor.

29. The system of claim 22 wherein said plurality of sensors includes at least one electric motor temperature sensor that generates an electric motor

temperature signal corresponding to a temperature of said electric motor of said compressor.

30. The system of claim 22 wherein said plurality of sensors includes at least one of an oil temperature sensor that generates an oil temperature signal corresponding to a temperature of oil of said compressor, an oil level sensor that generates an oil level signal corresponding to an oil level of said compressor, and an oil pressure sensor that generates an oil pressure signal corresponding to an oil pressure of said compressor.

31. The system of claim 22 wherein said second voltage is between 18 volts and 30 volts.

32. The system of claim 1 wherein said second voltage is 24 volts.

33. A system comprising:

a compressor having an electric motor connected to a three phase power supply;

a control module that controls said compressor;

a sensor module powered by single phase power derived from said three phase power supply, the sensor module having a plurality of inputs connected to a plurality of sensors that generate a plurality of operating signals associated with operating conditions of said compressor, a processor connected to said plurality of inputs that records multiple operating condition measurements from said plurality of operating signals, and a communication port connected to said processor for communicating said operating condition measurements to a control module that controls said compressor;

wherein said processor is disposed within an electrical enclosure of said compressor, said electrical enclosure being configured to house electrical terminals for connecting said power supply to said electric motor and wherein an operating voltage of said single phase power is less than an operating voltage of said three phase power.

34. The system of claim 33 wherein said processor is disposed within a tamper-resistant enclosure within said electrical enclosure.

35. The system of claim 33 further comprising a transformer connected to said three phase power supply to generate said single phase power, said transformer being located within said electrical enclosure.

36. The system of claim 33 wherein said plurality of sensors includes a first voltage sensor that generates a first voltage signal corresponding to a voltage of a first phase of said three phase power supply, a second voltage sensor that generates a second voltage signal corresponding to a voltage of a second phase of said three phase power supply, and a third voltage sensor that generates a third voltage signal corresponding to a voltage of a third phase of said three phase power supply.

37. The system of claim 33 wherein said plurality of sensors includes a current sensor that generates a current signal corresponding to a current of one of said first, second, and third phases said three phase power supply.

38. The system of claim 33 wherein said operating voltage of said single phase power is between 18 volts and 30 volts.

39. The system of claim 33 wherein said operating voltage of said single phase power is 24 volts.

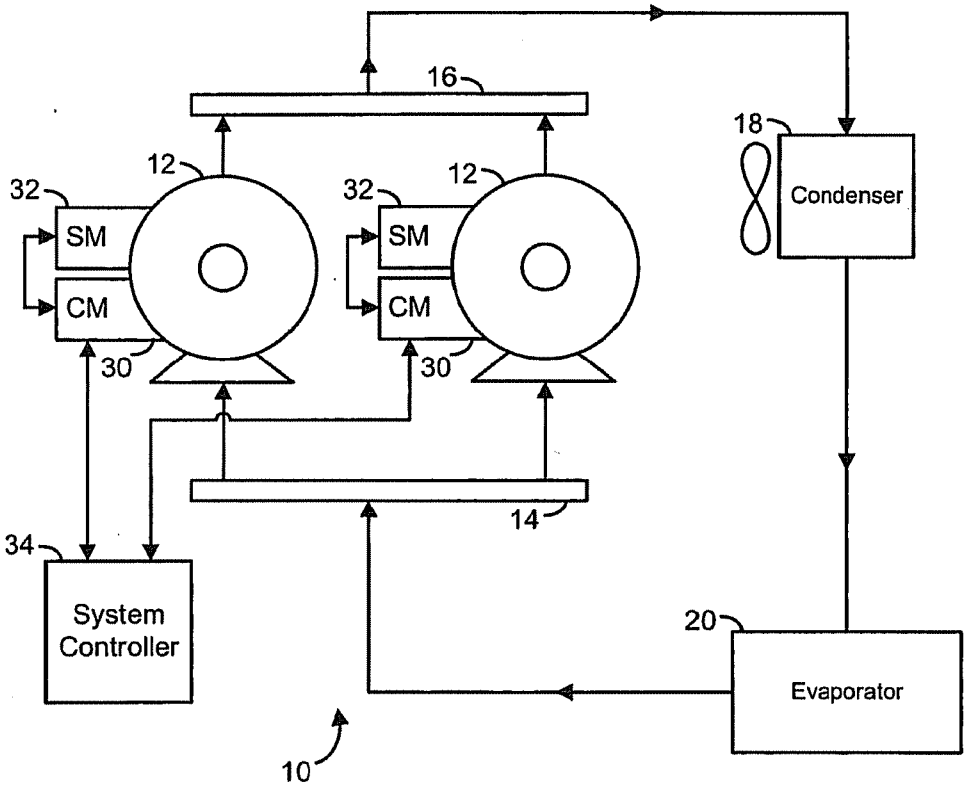
16
18
12
12
32
32
SM
SM
CM
CM
30
30
Condenser
14
34
System Controller
20
Evaporator
10

FIG 1

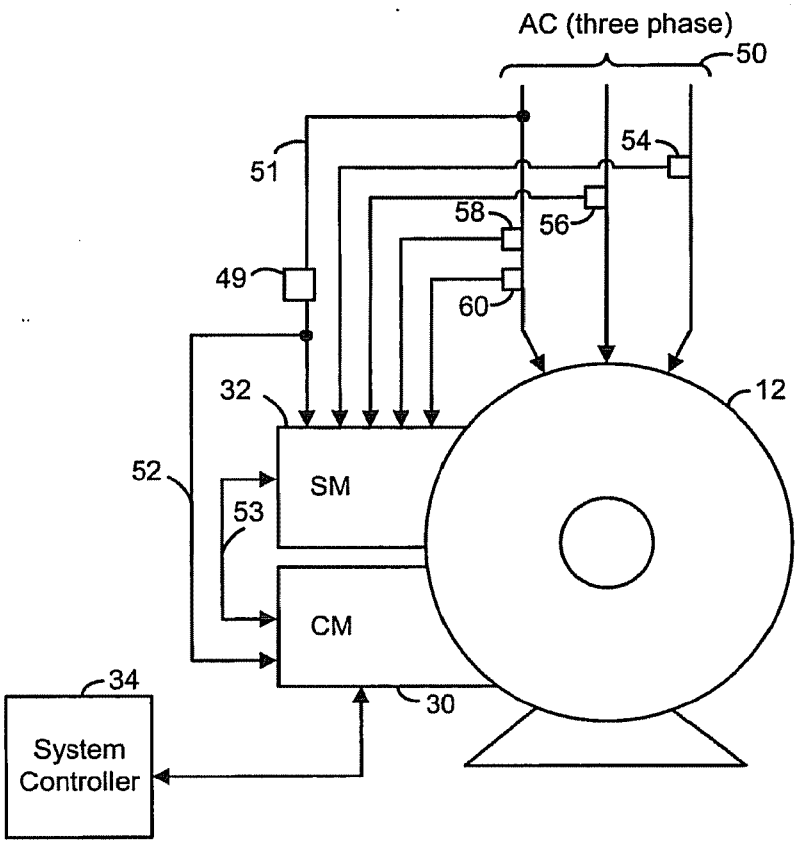
AC (three phase)
50
51
54
58
56
49
60
32
12
52
SM
53
CM
34
30
System
Controller

FIG 2

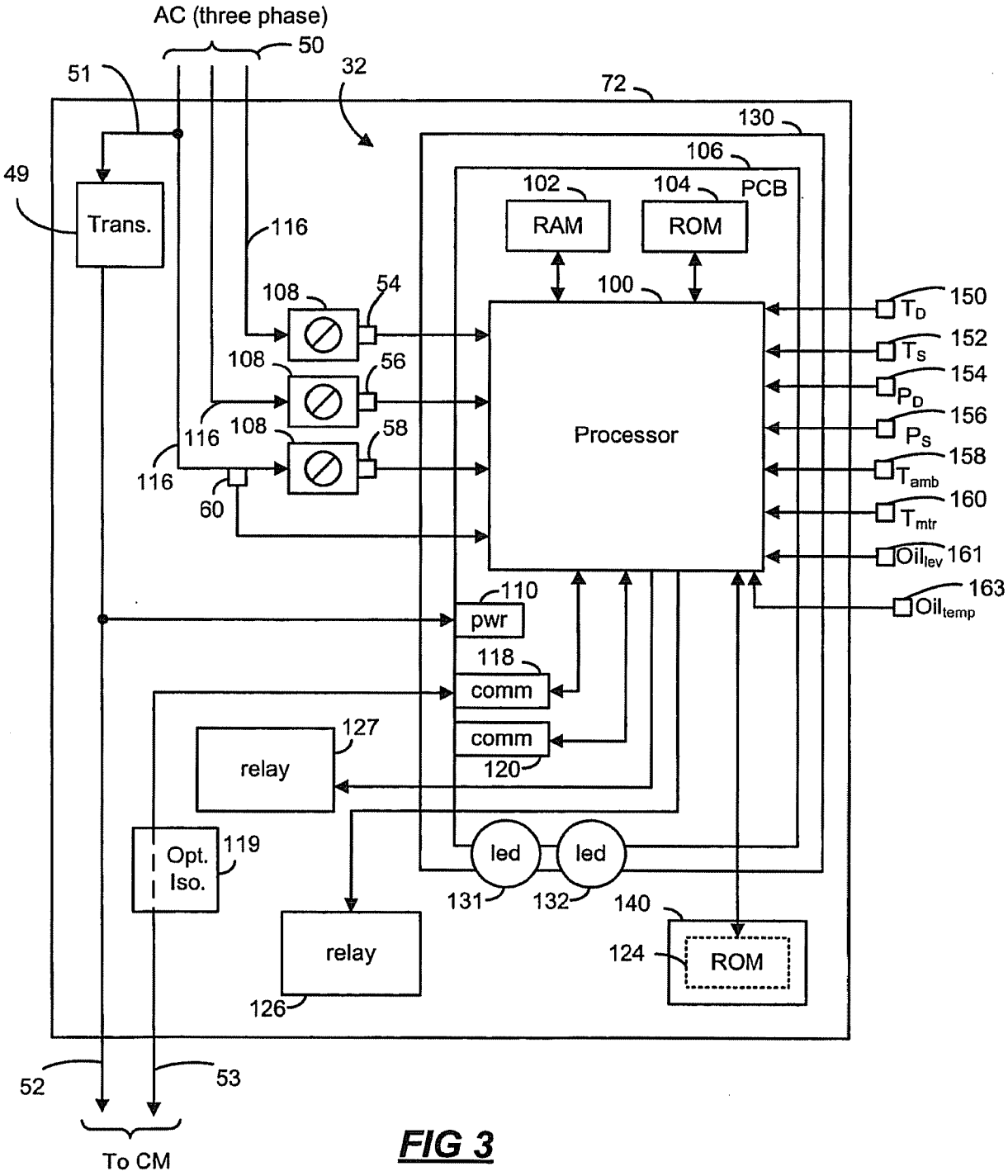
AC (three phase)
50
51
32
72
130
106
49
Trans.
102
RAM
104
ROM
PCB
116
108
54
100
56
58
60
Processor
150
T_D
152
T_S
154
P_D
156
P_S
158
T_{amb}
160
T_{mtr}
161
Oil_{lev}
163
Oil_{temp}
110
pwr
118
comm
comm
120
127
relay
119
Opt. Iso.
led
led
131
132
140
124
ROM
relay
126
52
53
To CM

FIG 3

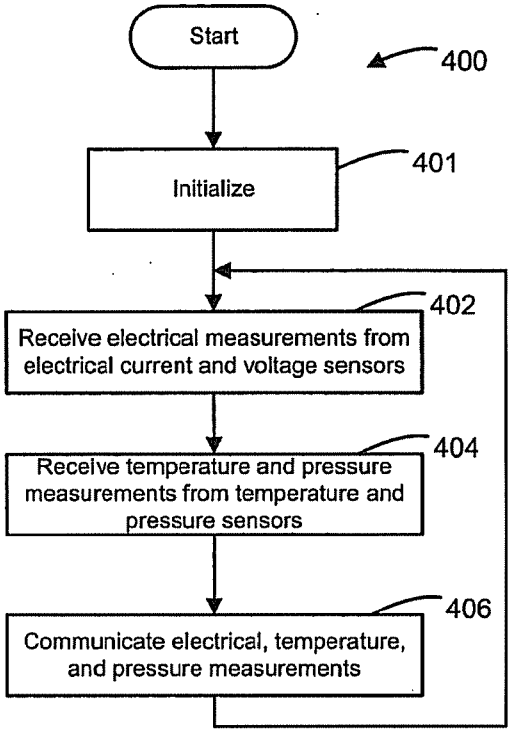
Start
400
Initialize
401
Receive electrical measurements from electrical current and voltage sensors
402
Receive temperature and pressure measurements from temperature and pressure sensors
404
Communicate electrical, temperature, and pressure measurements
406

FIG 4

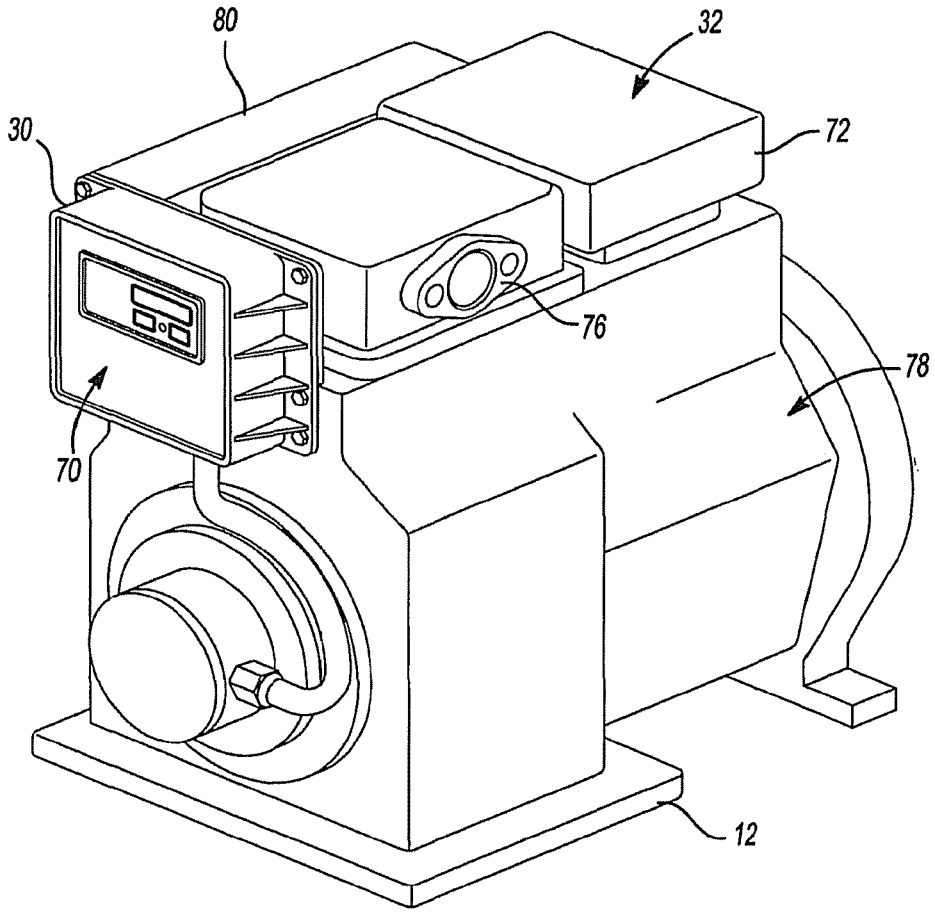

FIG 5

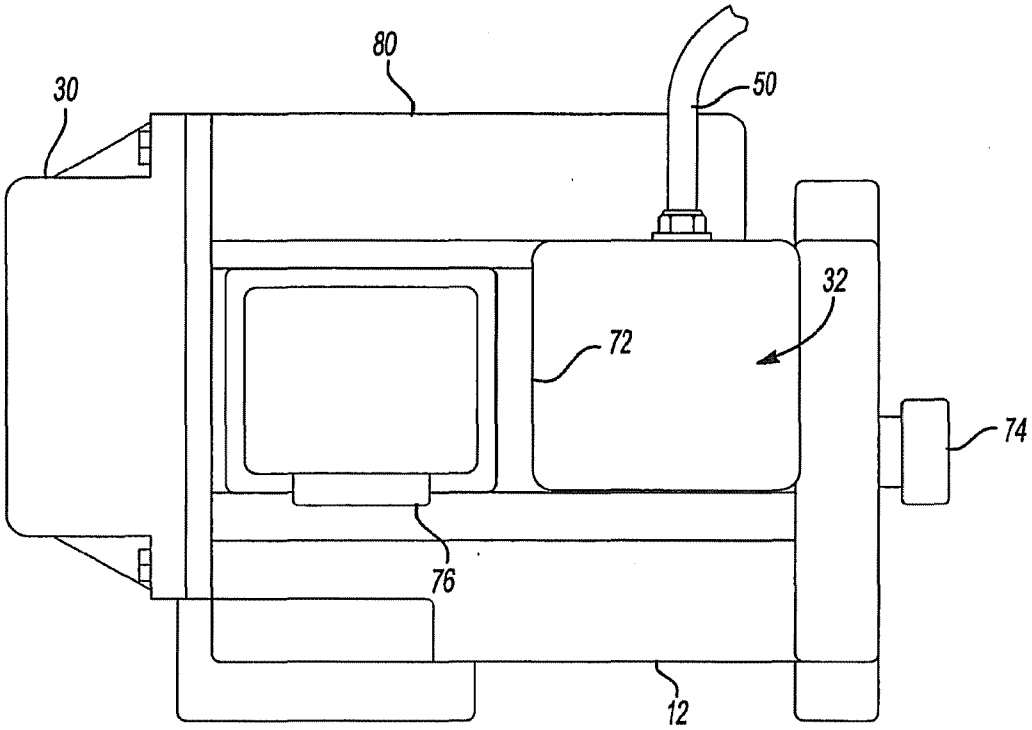

FIG 6

INTERNATIONAL SEARCH REPORT

International application No.
PCT/US2008/012362

A. CLASSIFICATION OF SUBJECT MATTER

F04B 49/00(2006.01)i, F04B 49/06(2006.01)i, F04B 35/04(2006.01)i

According to International Patent Classification (IPC) or to both national classification and IPC

B. FIELDS SEARCHED

Minimum documentation searched (classification system followed by classification symbols)

IPC: F04B

Documentation searched other than minimum documentation to the extent that such documents are included in the fields searched

Korean Utility models and applications for Utility models since 1975

Japanese Utility models and applications for Utility models since 1975

Electronic data base consulted during the international search (name of data base and, where practicable, search terms used)

eKIPASS(KIPO internal) & keywords: "compressor", "sensor", "module", "motor", "voltage", "phase", "signal", "processor", "communication", "port", and "terminal".

C. DOCUMENTS CONSIDERED TO BE RELEVANT

Category*	Citation of document, with indication, where appropriate, of the relevant passages	Relevant to claim No.
A	JP 2004-316504 A (HITACHI KOKI CO., LTD.) 11 November 2004 See claims 1-7; figures 1-9.	1-39
A	KR 10-2002-0041977 A (LG ELECTRONICS INC.) 05 June 2002 See claims 1-5; figures 1-4.	1-39
A	JP 2006-046219 A (DAIKIN IND. LTD.) 16 February 2006 See claims 1-10; figures 1-7.	1-39
A	KR 10-2004-0021281 A (SAMSUNG ELECTRONICS CO., LTD.) 10 March 2004 See claims 1-5; figures 1-5.	1-39

☐ Further documents are listed in the continuation of Box C.

☒ See patent family annex.

* Special categories of cited documents:

"A" document defining the general state of the art which is not considered to be of particular relevance

"E" earlier application or patent but published on or after the international filing date

"L" document which may throw doubts on priority claim(s) or which is cited to establish the publication date of citation or other special reason (as specified)

"O" document referring to an oral disclosure, use, exhibition or other means

"P" document published prior to the international filing date but later than the priority date claimed

"T" later document published after the international filing date or priority date and not in conflict with the application but cited to understand the principle or theory underlying the invention

"X" document of particular relevance; the claimed invention cannot be considered novel or cannot be considered to involve an inventive step when the document is taken alone

"Y" document of particular relevance; the claimed invention cannot be considered to involve an inventive step when the document is combined with one or more other such documents,such combination being obvious to a person skilled in the art

"&" document member of the same patent family

Date of the actual completion of the international search	Date of mailing of the international search report
12 FEBRUARY 2009 (12.02.2009)	**12 FEBRUARY 2009 (12.02.2009)**
Name and mailing address of the ISA/KR Korean Intellectual Property Office Government Complex-Daejeon, 139 Seonsa-ro, Seo-gu, Daejeon 302-701, Republic of Korea Facsimile No. 82-42-472-7140	Authorized officer KIM Sung Ho Telephone No. 82-42-481-8438

Form PCT/ISA/210 (second sheet) (July 2008)

INTERNATIONAL SEARCH REPORT

Information on patent family members

International application No.
PCT/US2008/012362

Patent document cited in search report	Publication date	Patent family member(s)	Publication date
JP 2004-316504 A	11.11.2004	DE 102004007882 A1	28.10.2004
		US 2004-0191073 A1	30.09.2004
KR 10-2002-0041977 A	05.06.2002	BR 0105454 A	30.07.2002
		CN 1325797 C	11.07.2007
		CN 1356472 A	03.07.2002
		JP 2002-202053 A	19.07.2002
		US 2002-064463 A1	30.05.2002
		US 6537034 B2	25.03.2003
JP 2006-046219 A	16.02.2006	None	
KR 10-2004-0021281 A	10.03.2004	CN 1481069 A	10.03.2004
		JP 2004-092633 A	25.03.2004
		US 2004-0042904 A1	04.03.2004

PATENT COOPERATION TREATY

PCT

INTERNATIONAL PRELIMINARY REPORT ON PATENTABILITY
(Chapter I of the Patent Cooperation Treaty)

(PCT Rule 44*bis*)

Applicant's or agent's file reference 0315-609/POA	**FOR FURTHER ACTION**	See item 4 below
International application No. PCT/US2008/012362	International filing date *(day/month/year)* 31 October 2008 (31.10.2008)	Priority date *(day/month/year)* 02 November 2007 (02.11.2007)
International Patent Classification (8th edition unless older edition indicated) See relevant information in Form PCT/ISA/237		
Applicant EMERSON CLIMATE TECHNOLOGIES, INC.		

1. This international preliminary report on patentability (Chapter I) is issued by the International Bureau on behalf of the International Searching Authority under Rule 44 *bis*.1(a).

2. This REPORT consists of a total of 5 sheets, including this cover sheet.

   In the attached sheets, any reference to the written opinion of the International Searching Authority should be read as a reference to the international preliminary report on patentability (Chapter I) instead.

3. This report contains indications relating to the following items:

☒	Box No. I	Basis of the report
☐	Box No. II	Priority
☐	Box No. III	Non-establishment of opinion with regard to novelty, inventive step and industrial applicability
☐	Box No. IV	Lack of unity of invention
☒	Box No. V	Reasoned statement under Article 35(2) with regard to novelty, inventive step or industrial applicability; citations and explanations supporting such statement
☐	Box No. VI	Certain documents cited
☐	Box No. VII	Certain defects in the international application
☐	Box No. VIII	Certain observations on the international application

4. The International Bureau will communicate this report to designated Offices in accordance with Rules 44*bis*.3(c) and 93*bis*.1 but not, except where the applicant makes an express request under Article 23(2), before the expiration of 30 months from the priority date (Rule 44*bis* .2).

	Date of issuance of this report 04 May 2010 (04.05.2010)
The International Bureau of WIPO 34, chemin des Colombettes 1211 Geneva 20, Switzerland Facsimile No. +41 22 338 82 70	Authorized officer Simin Baharlou e-mail: pt09.pct@wipo.int

Form PCT/IB/373 (January 2004)

PATENT COOPERATION TREATY

From the
INTERNATIONAL SEARCHING AUTHORITY

To:
MALINZAK MICHAEL

HARNESS, DICKEY & PIERCE, P.L.C. P.O. BOX 828
BLOOMFIELD HILLS MI 48303 USA

PCT

WRITTEN OPINION OF THE INTERNATIONAL SEARCHING AUTHORITY

(PCT Rule 43bis.1)

Date of mailing *(day/month/year)*	**12 FEBRUARY 2009 (12.02.2009)**
Applicant's or agent's file reference 0315-609/POA	**FOR FURTHER ACTION** See paragraph 2 below

International application No.	International filing date *(day/month/year)*	Priority date *(day/month/year)*
PCT/US2008/012362	**31 OCTOBER 2008 (31.10.2008)**	02 NOVEMBER 2007 (02.11.2007)

International Patent Classification (IPC) or both national classification and IPC

F04B 49/00(2006.01)i, F04B 49/06(2006.01)i, F04B 35/04(2006.01)i

Applicant

EMERSON CLIMATE TECHNOLOGIES, INC. et al

1. This opinion contains indications relating to the following items:

- ☒ Box No. I Basis of the opinion
- ☐ Box No. II Priority
- ☐ Box No. III Non-establishment of opinion with regard to novelty, inventive step and industrial applicability
- ☐ Box No. IV Lack of unity of invention
- ☒ Box No. V Reasoned statement under Rule 43bis.1(a)(i) with regard to novelty, inventive step or industrial applicability; citations and explanations supporting such statement
- ☐ Box No. VI Certain documents cited
- ☐ Box No. VII Certain defects in the international application
- ☐ Box No. VIII Certain observations on the international application

2. **FURTHER ACTION**

If a demand for international preliminary examination is made, this opinion will be considered to be a written opinion of the International Preliminary Examining Authority ("IPEA") except that this does not apply where the applicant chooses an Authority other than this one to be the IPEA and the chosen IPEA has notified the International Bureau under Rule 66.1bis(b) that written opinions of this International Searching Authority will not be so considered.

If this opinion is, as provided above, considered to be a written opinion of the IPEA, the applicant is invited to submit to the IPEA a written reply together, where appropriate, with amendments, before the expiration of 3 months from the date of mailing of Form PCT/ISA/220 or before the expiration of 22 months from the priority date, whichever expires later.
For further options, see Form PCT/ISA/220.

3. For further details, see notes to Form PCT/ISA/220.

Name and mailing address of the ISA/KR	Date of completion of this opinion	Authorized officer
Korean Intellectual Property Office Government Complex-Daejeon, 139 Sconsa-ro, Seo-gu, Daejeon 302 -701, Republic of Korea Facsimile No. 82-42-472-7140	12 FEBRUARY 2009 (12.02.2009)	KIM Sung Ho Telephone No.82-42-481-8438

WRITTEN OPINION OF THE INTERNATIONAL SEARCHING AUTHORITY

International application No.
PCT/US2008/012362

Box No. I Basis of this opinion

1. With regard to the **language**, this opinion has been established on the basis of:

   ☒ the international application in the language in which it was filed

   ☐ a translation of the international application into _____, which is the language of a translation furnished for the purposes of international search (Rules 12.3(a) and 23.1(b))

2. ☐ This opinion has been established taking into account the **rectification of an obvious mistake** authorized by or notified to this Authority under Rule 91 (Rule 43*bis*.1(a))

3. With regard to any **nucleotide and/or amino acid sequence** disclosed in the international application, this opinion has been established on the basis of:

   a. type of material
   - ☐ a sequence listing
   - ☐ table(s) related to the sequence listing

   b. format of material
   - ☐ on paper
   - ☐ in electronic form

   c. time of filing/furnishing
   - ☐ contained in the international application as filed.
   - ☐ filed together with the international application in electronic form.
   - ☐ furnished subsequently to this Authority for the purposes of search.

4. ☐ In addition, in the case that more than one version or copy of a sequence listing and/or table relating thereto has been filed or furnished, the required statements that the information in the subsequent or additioanl copies is identical to that in the application as filed or does not go beyond the application as filed, as appropriate, were furnished.

5. Additional comments:

WRITTEN OPINION OF THE INTERNATIONAL SEARCHING AUTHORITY

International application No.
PCT/US2008/012362

Box No. V Reasoned statement under Rule 43bis.1(a)(i) with regard to novelty, inventive step or industrial applicability; citations and explanations supporting such statement

1. Statement

Novelty (N)	Claims	1-39	YES
	Claims	None	NO
Inventive step (IS)	Claims	1-39	YES
	Claims	None	NO
Industrial applicability (IA)	Claims	1-39	YES
	Claims	None	NO

2. Citations and explanations :

Reference is made to the following documents from the International Search Report(ISR):

D1: JP 2004-316504 A
D2: KR 10-2002-0041977 A
D3: JP 2006-046219 A
D4: KR 10-2004-0021281 A

1. Novelty and Inventive Step

1.1 Claims 1-11

The subject matter of independent claim 1 differs from the disclosure of documents D1-D4 in comprising: the processor disposed from within the electrical enclosure of the compressor; and the electrical enclosure configured to house electrical terminals for connecting the power supply operating at the first voltage to the electric motor, wherein the second voltage is less than the first voltage. And it is not obvious to a person skilled in the art by the documents, taken alone or in combination. Therefore, claim 1 meets the requirements of PCT Article 33(2) and (3) with respect to novelty and inventive step.

Claims 2-11 depend on claim 1, and consequently they are also considered to be novel and to involve an inventive step under PCT Article 33(2) and (3).

1.2 Claims 12-18

The subject matter of independent claim 12 differs from the disclosure of documents D1-D4 in comprising: the processor disposed from within the electrical enclosure of the compressor; and the electrical enclosure configured to house electrical terminals for connecting the power supply operating to the electric motor, wherein the operating voltage of the single phase power is less than the operating voltage of the three phase power. And it is not obvious to a person skilled in the art by the documents, taken alone or in combination. Therefore, claim 12 meets the requirements of PCT Article 33(2) and (3) with respect to novelty and inventive step.

(Continued on Supplemental Box.)

Supplemental Box

In case the space in any of the preceding boxes is not sufficient.
Continuation of :

Box No. V.

Claims 13-18 depend on claim 12, and consequently they are also considered to be novel and to involve an inventive step under PCT Article 33(2) and (3).

1.3 Claims 19-21

Claim 19 relates to a method of assembling the subject matter according to claim 1. Claim 19 is considered to be novel and to involve an inventive step under PCT Article 33(2) and (3), because the subject matter of claim 1 is considered to be novel and to involve an inventive step under PCT Article 33(2) and (3).

Claims 20-21 depend on claim 19, and consequently they are also considered to be novel and to involve an inventive step under PCT Article 33(2) and (3).

1.4 Claims 22-32

Claim 22 relates to a system of including the subject matter according to claim 1. Claim 22 is considered to be novel and to involve an inventive step under PCT Article 33(2) and (3), because the subject matter of claim 1 is considered to be novel and to involve an inventive step under PCT Article 33(2) and (3).

Claims 23-32 depend on claim 22 and consequently they are also considered to be novel and to involve an inventive step under PCT Article 33(2) and (3).

1.5 Claims 33-39

Claim 33 relates to a system of including the subject matter according to claim 12. Claim 33 is considered to be novel and to involve an inventive step under PCT Article 33(2) and (3), because the subject matter of claim 12 is considered to be novel and to involve an inventive step under PCT Article 33(2) and (3).

Claims 34-39 depend on claim 33, and consequently they are also considered to be novel and to involve an inventive step under PCT Article 33(2) and (3).

2. Industrial Applicability

Claims 1-39 are industrially applicable under PCT Article 33(4).

INTERNATIONAL SEARCH REPORT

International application No.
PCT/US2008/012362

A. CLASSIFICATION OF SUBJECT MATTER

F04B 49/00(2006.01)i, F04B 49/06(2006.01)i, F04B 35/04(2006.01)i

According to International Patent Classification (IPC) or to both national classification and IPC

B. FIELDS SEARCHED

Minimum documentation searched (classification system followed by classification symbols)

IPC: F04B

Documentation searched other than minimum documentation to the extent that such documents are included in the fields searched

Korean Utility models and applications for Utility models since 1975

Japanese Utility models and applications for Utility models since 1975

Electronic data base consulted during the international search (name of data base and, where practicable, search terms used)

eKIPASS(KIPO internal) & keywords: "compressor", "sensor", "module", "motor", "voltage", "phase", "signal", "processor", "communication", "port", and "terminal".

C. DOCUMENTS CONSIDERED TO BE RELEVANT

Category*	Citation of document, with indication, where appropriate, of the relevant passages	Relevant to claim No.
A	JP 2004-316504 A (HITACHI KOKI CO., LTD.) 11 November 2004 See claims 1-7; figures 1-9.	1-39
A	KR 10-2002-0041977 A (LG ELECTRONICS INC.) 05 June 2002 See claims 1-5; figures 1-4.	1-39
A	JP 2006-046219 A (DAIKIN IND. LTD.) 16 February 2006 See claims 1-10; figures 1-7.	1-39
A	KR 10-2004-0021281 A (SAMSUNG ELECTRONICS CO., LTD.) 10 March 2004 See claims 1-5; figures 1-5.	1-39

☐ Further documents are listed in the continuation of Box C.

☒ See patent family annex.

* Special categories of cited documents:

"A" document defining the general state of the art which is not considered to be of particular relevance

"E" earlier application or patent but published on or after the international filing date

"L" document which may throw doubts on priority claim(s) or which is cited to establish the publication date of citation or other special reason (as specified)

"O" document referring to an oral disclosure, use, exhibition or other means

"P" document published prior to the international filing date but later than the priority date claimed

"T" later document published after the international filing date or priority date and not in conflict with the application but cited to understand the principle or theory underlying the invention

"X" document of particular relevance; the claimed invention cannot be considered novel or cannot be considered to involve an inventive step when the document is taken alone

"Y" document of particular relevance; the claimed invention cannot be considered to involve an inventive step when the document is combined with one or more other such documents,such combination being obvious to a person skilled in the art

"&" document member of the same patent family

Date of the actual completion of the international search	Date of mailing of the international search report
12 FEBRUARY 2009 (12.02.2009)	**12 FEBRUARY 2009 (12.02.2009)**
Name and mailing address of the ISA/KR Korean Intellectual Property Office Government Complex-Daejeon, 139 Seonsa-ro, Seo-gu, Daejeon 302-701, Republic of Korea Facsimile No. 82-42-472-7140	Authorized officer KIM Sung Ho Telephone No. 82-42-481-8438

Form PCT/ISA/210 (second sheet) (July 2008)

INTERNATIONAL SEARCH REPORT

Information on patent family members

International application No.
PCT/US2008/012362

Patent document cited in search report	Publication date	Patent family member(s)	Publication date
JP 2004-316504 A	11.11.2004	DE 102004007882 A1	28.10.2004
		US 2004-0191073 A1	30.09.2004
KR 10-2002-0041977 A	05.06.2002	BR 0105454 A	30.07.2002
		CN 1325797 C	11.07.2007
		CN 1356472 A	03.07.2002
		JP 2002-202053 A	19.07.2002
		US 2002-064463 A1	30.05.2002
		US 6537034 B2	25.03.2003
JP 2006-046219 A	16.02.2006	None	
KR 10-2004-0021281 A	10.03.2004	CN 1481069 A	10.03.2004
		JP 2004-092633 A	25.03.2004
		US 2004-0042904 A1	04.03.2004

Doc Code: PET.GREEN
Document Description: Petition for Green Tech Pilot

PTO/SB/420 (03-11)

PETITION TO MAKE SPECIAL UNDER THE GREEN TECHNOLOGY PILOT PROGRAM

Attorney Docket Number: 253159-1	Application Number (if known): 13/176,144	Filing date: July 5, 2011

First Named Inventor: Kevin Wayne Kinzie

Title: METHODS FOR CONTROLLING THE AMPLITUDE MODULATION OF NOISE GENERATED BY WIND TURBINES

APPLICANT HEREBY REQUESTS TO PARTICIPATE IN THE GREEN TECHNOLOGY PILOT PROGRAM FOR THE ABOVE-IDENTIFIED APPLICATION. See Instruction Sheet on page 2.

This petition must be timely filed electronically using the USPTO electronic filing system, EFS-Web.

1. By filing this petition:

   Applicant is requesting early publication: Applicant hereby requests early publication under 37 CFR 1.219 and the publication fee set forth in 37 CFR 1.18(d) accompanies this request.

2. By filing this petition: applicant is agreeing to make an election without traverse in a telephonic interview and elect an invention that meets the eligibility requirements for the Green Technology Pilot Program, if the Office determines that the claims are not obviously directed to a single invention. See Instruction Sheet.

3. This request is accompanied by statements of special status for the eligibility requirement.

4. The application contains no more than three (3) independent claims and twenty (20) total claims.

5. The application does not contain any multiple dependent claims.

6. Other attachments: Statement Concerning the Basis for the Special Status

Signature /Allison W. Mages/	Date September 26, 2011
Name (Print/Typed) Allison W. Mages	Registration Number 57,275

Note: Signatures of all the inventors or assignees of record of the entire interest or their representative(s) are required in accordance with 37 CFR 1.33 and 11.18. Please see 37 CFR 1.4(d) for the form of the signature. If necessary, submit multiple forms for more than one signature, see below.*

☐ *Total of _____ forms are submitted.

If you need assistance in completing the form, call 1-800-PTO-9199 and select option 2.

IN THE UNITED STATES PATENT AND TRADEMARK OFFICE

First Named Inventor: Kevin Wayne Kinzie	)
Confirmation No.:4050	)
	)
Serial No.: 13/176,144	)
	)
Filing Date: 07/05/2011	)
	)
Atty Docket No.: 253159-1 (US)	)

VIA EFS
Commissioner for Patents
P.O. Box 1450
Alexandria, VA 22313-1450

Statement Concerning the Basis for the Special Status

SIR:

This application relates generally to wind turbines and, more particularly, to a system and methods for controlling the amplitude modulation of noise generated by wind turbines. Wind power is considered one of the cleanest, most environmentally friendly energy sources presently available, and wind turbines have gained increased attention in this regard. (See [0001] and [0002]).

Therefore, Applicant respectfully submits that Special Status is sought on the basis that the present invention materially contributes to the discovery or development of renewable energy resources.

The undersigned representative may be contacted at the number below to facilitate the resolution of any matters. Please charge any fees that are incurred in connection with this Statement to deposit account no. 09-0470.

Respectfully submitted,

General Electric Company

By : /Allison W. Mages/
Allison W. Mages
Reg. No. 57,275

Dated: September 26, 2011

GE Global Patent Operation
2 Corporate Drive, Suite 648
Shelton, CT 06484
203-944-6730

UNITED STATES PATENT AND TRADEMARK OFFICE

UNITED STATES DEPARTMENT OF COMMERCE
United States Patent and Trademark Office
Address: COMMISSIONER FOR PATENTS
P.O. Box 1450
Alexandria, Virginia 22313-1450
www.uspto.gov

APPLICATION NO.	FILING DATE	FIRST NAMED INVENTOR	ATTORNEY DOCKET NO.	CONFIRMATION NO.
13/176,144	07/05/2011	Kevin Wayne Kinzie	253159/GEC-419	4050

87853 7590 10/11/2011

Dority & Manning, PA and General Electric Company
Post Office Box 1449
Greenville, SC 29602

EXAMINER	
ART UNIT	PAPER NUMBER
3745	

MAIL DATE	DELIVERY MODE
10/11/2011	PAPER

Please find below and/or attached an Office communication concerning this application or proceeding.

The time period for reply, if any, is set in the attached communication.

UNITED STATES PATENT AND TRADEMARK OFFICE

Commissioner for Patents
United States Patent and Trademark Office
P.O. Box 1450
Alexandria, VA 22313-1450
www.uspto.gov

Dority & Manning, PA and General Electric Company
Post Office Box 1449
Greenville SC 29602

In re Application of :
KINZIE, KEVIN WAYNE . et al :
Application No. 13/176,144 :
Filed: July 05, 2011 :
Attorney Docket No. 253159/GEC-419 :

DECISION ON PETITION
TO MAKE SPECIAL UNDER
THE GREEN TECHNOLOGY
PILOT PROGRAM

This is a decision on the renewed petition under 37 CFR 1.102, filed September 28, 2011 to make the above-identified application special under the pilot program for applications pertaining to Green Technologies as set forth in 74 Federal Register Notice 64666 (December 8, 2009) and amended by 75 Federal Register Notice 28554 (May 21, 2010) and 75 Federal Register Notice 69049 (November 10, 2010).

The petition is **granted.**

A grantable petition to make an application special under 37 CFR 1.102 and the pilot program as set forth in 74 FR 64666 must be directed to a nonprovisional application filed under 35 USC 111(a) or be a national stage entry under 35 USC 371, exclusive of any reissue applications.

In order to qualify for special status, the following requirements must be met. 1) The application must have no more than 3 independent claims and no more than 20 total claims. 2) The application must not contain any multiple dependent claims. 3) The petition must state the basis for seeking special status, i.e., the claimed invention either: A) materially enhances the quality of the environment or B) materially contributes to: i) the discovery or development of renewable energy resources, ii) the more efficient utilization and conservation of energy resources, or iii) greenhouse gas emission reduction. 4) If the disclosure is not clear on its face that the claimed invention materially contributes under category (A) or (B), the petition must be accompanied by a statement by the applicant, assignee, or an attorney/agent registered to practice before the Office explaining how the materiality standard is met. 5) A statement that applicant will agree to make an election without traverse in a telephonic interview if a restriction requirement is made by the examiner. 6) The petition to make special must be filed electronically. 7) The petition must be filed at least one day prior to the date that a first Office Action appears in the Patent Application Information Retrieval (PAIR) system. 8) The petition must be accompanied by a request for early publication in compliance with 37 CFR 1.219 and include the publication fee as set forth in 37 CFR 1.18(d).

The requirement for a fee for consideration of the petition to make special for applications pertaining to Green Technologies has been waived.

The instant petition complies with items 1 – 8 above. Accordingly, the above-identified application has been accorded "special" status.

Telephone inquires concerning this decision should be directed to Henry C. Yuen at 571-272-4856.

This application will be forwarded to the Technology Center Art Unit 3745 for action on the merits commensurate with this decision.

/Henry C. Yuen/

Henry C. Yuen
Quality Assurance Specialist
Technology Center TC 3700

UNITED STATES PATENT AND TRADEMARK OFFICE

Commissioner for Patents
United States Patent and Trademark Office
P.O. Box 1450
Alexandria, VA 22313-1450
www.uspto.gov

PATENT OFFICE OF DR. CHUNG S. PARK
P. O. BOX 62312
SUNNYVALE CA 94088-2312

MAILED

AUG 01 2011

OFFICE OF PETITIONS

In re Application of :
Kim Chol :
Application No. 13/176,161 : DECISION ON PETITION
Filed: July 5, 2011 : TO MAKE SPECIAL UNDER
Attorney Docket No. 0056702-000010 : 37 CFR 1.102(c)(1)
:

This is a decision on the petition under 37 CFR 1.102(c)(1), filed July 5, 2011, to make the above-identified application special based on applicant's age as set forth in M.P.E.P. § 708.02, Section IV.

The petition is **GRANTED**.

A grantable petition to make an application special under 37 CFR 1.102(c)(1) and MPEP § 708.02, Section IV: Applicant's Age must be accompanied by evidence showing that at least one of the applicants is 65 years of age, or more, such as a birth certificate or a statement by applicant. No fee is required

The instant petition includes a statement by an attorney on behalf of inventor Kim Chol attesting to his/her age. The above-identified application has been accorded "special" status.

Telephone inquiries concerning this decision should be directed to Kimberly Inabinet at 571-272-4618.

All other inquiries concerning either the examination or status of the application should be directed to the Technology Center.

Upon completion of the pre-examination processing by the Office of Patent Application Processing, this application will be referred to Technology Center 3711 for action on the merits commensurate with this decision.

/Kimberly Inabinet/

Kimberly Inabinet
Petitions Examiner
Office of Petitions

Doc Code: PET.GREEN
Document Description: Petition for Green Tech Pilot

PTO/SB/420 (12-09)
Approved for use through 05/31/2010. OMB 0651-0062
U.S. Patent and Trademark Office; U. S. DEPARTMENT OF COMMERCE
Under the Paperwork Reduction Act of 1995, no persons are required to respond to a collection of information unless it displays a valid OMB control number.

PETITION TO MAKE SPECIAL UNDER THE GREEN TECHNOLOGY PILOT PROGRAM

Attorney Docket Number: TMP-069	Application Number (if known): 13/176,221	Filing date: July 5, 2011

First Named Inventor: Kazuhisa TSUTSUMI

Title: POWER GENERATING APPARATUS OF RENEWABLE ENERGY TYPE AND METHOD FOR INSTALLING HYDRAULIC PUMP

APPLICANT HEREBY REQUESTS TO PARTICIPATE IN THE GREEN TECHNOLOGY PILOT PROGRAM FOR THE ABOVE-IDENTIFIED APPLICATION. See Instruction Sheet on page 2.

This petition must be timely filed electronically using the USPTO electronic filing system, EFS-Web.

1. By filing this petition:

   Applicant is requesting early publication: Applicant hereby requests early publication under 37 CFR 1.219 and the publication fee set forth in 37 CFR 1.18(d) accompanies this request. Applicant hereby rescinds under 37 CFR 1.213(b) any previous filed request that the above-identified application not be published under 35 U.S.C. 122(b).

   If the application has been published, the petition must still be accompanied by the publication fee set forth in 37 CFR 1.18(d) and a statement that the application has been published.

2. By filing this petition: applicant is agreeing to make an election without traverse in a telephonic interview and elect an invention that meets the eligibility requirement and classification requirement set forth in the notice entitled "Pilot Program for Green Technologies Including Greenhouse Gas Reduction" that was published in the Federal Register if the Office determines that the claims are not obviously directed to a single invention.

3. This request is accompanied by statements of special status for the eligibility requirement.

4. The application contains no more than three (3) independent claims and twenty (20) total claims.

5. The application does not contain any multiple dependent claims.

6. Other attachments: _____

Signature /Manabu KANESAKA/	Date November 15, 2011
Name (Print/Typed) Manabu KANESAKA	Registration Number 31,467

Note: *Signatures of all the inventors or assignees of record of the entire interest or their representative(s) are required in accordance with 37 CFR 1.33 and 11.18. Please see 37 CFR 1.4(d) for the form of the signature. If necessary, submit multiple forms for more than one signature, see below*.*

☐ *Total of _____ forms are submitted.

The information is required to obtain or retain a benefit by the public which is to file (and by the USPTO to process) an application. Confidentiality is governed by 35 U.S.C. 122 and 37 CFR 1.11 and 1.14. This collection is estimated to take 12 hours to complete, including gathering, preparing, and submitting the completed application form to the USPTO. Time will vary depending upon the individual case. Any comments on the amount of time you require to complete this form and/or suggestions for reducing this burden, should be sent to the Chief Information Officer, U.S. Patent and Trademark Office, U.S. Department of Commerce, P.O. Box 1450, Alexandria, VA 22313-1450. DO NOT SEND FEES OR COMPLETED FORMS TO THIS ADDRESS. **SEND TO: Commissioner for Patents, P.O. Box 1450, Alexandria, VA 22313-1450.**

If you need assistance in completing the form, call 1-800-PTO-9199 and select option 2.

PTO/SB/420 (12-09)
Approved for use through 05/31/2010. OMB 0651-0062
U.S. Patent and Trademark Office; U. S. DEPARTMENT OF COMMERCE
Under the Paperwork Reduction Act of 1995, no persons are required to respond to a collection of information unless it displays a valid OMB control number.

Instruction Sheet for Petition to Make Special Under the Green Technology Pilot Program

(Not to be Submitted to the USPTO)

***The following is a summary of the requirements** (for more information see notice "Pilot Program for Green Technologies Including Greenhouse Gas Reduction" available on the USPTO web site at http://www.uspto.gov/web/offices/pac/dapp/ogsheet.html):*

(1) The application must be a non-reissue, non-provisional utility application filed under 35 U.S.C. 111(a), or an international application that has entered the national stage in compliance with 35 U.S.C. 371. The application must be previously filed before the publication date of the notice cited above. Reexamination proceedings are excluded from this pilot program.

(2) The application must be classified in one of the U.S. classifications listed in section VI of the notice cited above at the time of examination.

(3) The application must contain three or fewer independent claims and twenty or fewer total claims. The application must not contain any multiple dependent claims. For an application that contains more than three independent claims or twenty total claims, or multiple dependent claims, applicant must file a preliminary amendment in compliance with 37 CFR 1.121 to cancel the excess claims and/or the multiple dependent claims at the time the petition to make special is filed.

(4) The claims must be directed to a single invention that materially enhances the quality of the environment, or that materially contributes to: (1) the discovery or development of renewable energy resources; (2) the more efficient utilization and conservation of energy resources; or (3) green house gas emission reduction (see the eligibility requirements of sections II and III of the notice cited above). The petition must include a statement that, if the USPTO determines that the claims are directed to multiple inventions (e.g., in a restriction requirement), applicant will agree to make an election without traverse in a telephonic interview, and elect an invention that meets the eligibility requirements in section II or III of the notice cited above and is classified in one of the U.S. classifications listed in section VI of the notice cited above.

(5) The petition to make special must be timely filed electronically using the USPTO electronic filing system, EFS-Web, and selecting the document description of "Petition for Green Tech Pilot" on the EFS-Web screen. Applicant should use form PTO/SB/420, which will be available as a Portable Document Format (PDF) fillable form in EFS-Web and on the USPTO Web site.

(6) The petition to make special must be filed at least one day prior to the date that a first Office action (which may be an Office action containing only a restriction requirement) appears in the Patent Application Information Retrieval (PAIR) system. Applicant may check the status of the application using PAIR.

(7) The petition to make special must be accompanied by a request for early publication in compliance with 37 CFR 1.219 and the publication fee set forth in 37 CFR 1.18(d).

Privacy Act Statement

The **Privacy Act of 1974 (P.L. 93-579)** requires that you be given certain information in connection with your submission of the attached form related to a patent application or patent. Accordingly, pursuant to the requirements of the Act, please be advised that: (1) the general authority for the collection of this information is 35 U.S.C. 2(b)(2); (2) furnishing of the information solicited is voluntary; and (3) the principal purpose for which the information is used by the U.S. Patent and Trademark Office is to process and/or examine your submission related to a patent application or patent. If you do not furnish the requested information, the U.S. Patent and Trademark Office may not be able to process and/or examine your submission, which may result in termination of proceedings or abandonment of the application or expiration of the patent.

The information provided by you in this form will be subject to the following routine uses:

1. The information on this form will be treated confidentially to the extent allowed under the Freedom of Information Act (5 U.S.C. 552) and the Privacy Act (5 U.S.C 552a). Records from this system of records may be disclosed to the Department of Justice to determine whether disclosure of these records is required by the Freedom of Information Act.

2. A record from this system of records may be disclosed, as a routine use, in the course of presenting evidence to a court, magistrate, or administrative tribunal, including disclosures to opposing counsel in the course of settlement negotiations.

3. A record in this system of records may be disclosed, as a routine use, to a Member of Congress submitting a request involving an individual, to whom the record pertains, when the individual has requested assistance from the Member with respect to the subject matter of the record.

4. A record in this system of records may be disclosed, as a routine use, to a contractor of the Agency having need for the information in order to perform a contract. Recipients of information shall be required to comply with the requirements of the Privacy Act of 1974, as amended, pursuant to 5 U.S.C. 552a(m).

5. A record related to an International Application filed under the Patent Cooperation Treaty in this system of records may be disclosed, as a routine use, to the International Bureau of the World Intellectual Property Organization, pursuant to the Patent Cooperation Treaty.

6. A record in this system of records may be disclosed, as a routine use, to another federal agency for purposes of National Security review (35 U.S.C. 181) and for review pursuant to the Atomic Energy Act (42 U.S.C. 218(c)).

7. A record from this system of records may be disclosed, as a routine use, to the Administrator, General Services, or his/her designee, during an inspection of records conducted by GSA as part of that agency's responsibility to recommend improvements in records management practices and programs, under authority of 44 U.S.C. 2904 and 2906. Such disclosure shall be made in accordance with the GSA regulations governing inspection of records for this purpose, and any other relevant (*i.e.*, GSA or Commerce) directive. Such disclosure shall not be used to make determinations about individuals.

8. A record from this system of records may be disclosed, as a routine use, to the public after either publication of the application pursuant to 35 U.S.C. 122(b) or issuance of a patent pursuant to 35 U.S.C. 151. Further, a record may be disclosed, subject to the limitations of 37 CFR 1.14, as a routine use, to the public if the record was filed in an application which became abandoned or in which the proceedings were terminated and which application is referenced by either a published application, an application open to public inspection or an issued patent.

9. A record from this system of records may be disclosed, as a routine use, to a Federal, State, or local law enforcement agency, if the USPTO becomes aware of a violation or potential violation of law or regulation.

UNITED STATES PATENT AND TRADEMARK OFFICE

UNITED STATES DEPARTMENT OF COMMERCE
United States Patent and Trademark Office
Address: COMMISSIONER FOR PATENTS
P.O. Box 1450
Alexandria, Virginia 22313-1450
www.uspto.gov

APPLICATION NO.	FILING DATE	FIRST NAMED INVENTOR	ATTORNEY DOCKET NO.	CONFIRMATION NO.
13/176,221	07/05/2011	Kazuhisa TSUTSUMI	TMP-069	4192

32628 7590 12/07/2011

KANESAKA BERNER AND PARTNERS LLP
1700 DIAGONAL RD
SUITE 310
ALEXANDRIA, VA 22314-2848

EXAMINER	
ART UNIT	PAPER NUMBER
3745	

MAIL DATE	DELIVERY MODE
12/07/2011	PAPER

Please find below and/or attached an Office communication concerning this application or proceeding.

The time period for reply, if any, is set in the attached communication.

UNITED STATES PATENT AND TRADEMARK OFFICE

Commissioner for Patents
United States Patent and Trademark Office
P.O. Box 1450
Alexandria, VA 22313-1450
www.uspto.gov

KANESAKA BERNER AND PARTNERS LLP
1700 DIAGONAL RD
SUITE 310
ALEXANDRIA VA 22314-2848

In re Application of		
TSUTSUMI, KAZUHISA et. al.	:	DECISION ON PETITION
Application No. 13/176,221	:	TO MAKE SPECIAL UNDER
Filed: July 5, 2011	:	THE GREEN TECHNOLOGY
Attorney Docket No. TMP-069	:	PILOT PROGRAM

This is a decision on the petition under 37 CFR 1.102, filed November 15, 2011, to make the above-identified application special under the pilot program for applications pertaining to Green Technologies as set forth in 74 Federal Register Notice 64666 (December 8, 2009) and amended by 75 Federal Register Notice 28554 (May 21, 2010) and 75 Federal Register Notice 69049 (November 10, 2010).

The petition is **granted**.

A grantable petition to make an application special under 37 CFR 1.102 and the pilot program as set forth in 74 FR 64666 must be directed to a nonprovisional application filed under 35 USC 111(a) or be a national stage entry under 35 USC 371, exclusive of any reissue applications.

If reconsideration of this decision is desired, a petition for reconsideration must be filed within ONE (1) MONTH OR THIRTY (30) DAYS from the mail date of this decision, whichever is longer. No extension of this time limit can be granted under 37 CFR 1.136(a) or (b). The petition for reconsideration should include an exhaustive attempt to provide the lacking item(s) noted below, since, after a decision on the petition for reconsideration, no further reconsideration or review of the matter will be undertaken by the Director.

In order to qualify for special status, the following requirements must be met. 1) The application must have no more than 3 independent claims and no more than 20 total claims. 2) The application must not contain any multiple dependent claims. 3) The petition must state the basis for seeking special status, i.e., the claimed invention either: A) materially enhances the quality of the environment or B) materially contributes to: i) the discovery or development of renewable energy resources, ii) the more efficient utilization and conservation of energy resources, or iii) greenhouse gas emission reduction. 4) If the disclosure is not clear on its face that the claimed invention materially contributes under category (A) or (B), the petition must be accompanied by

a statement by the applicant, assignee, or an attorney/agent registered to practice before the Office explaining how the materiality standard is met. 5) A statement that applicant will agree to make an election without traverse in a telephonic interview if a restriction requirement is made by the examiner. 6) The petition to make special must be filed electronically. 7) The petition must be filed at least one day prior to the date that a first Office Action appears in the Patent Application Information Retrieval (PAIR) system. 8) The petition must be accompanied by a request for early publication in compliance with 37 CFR 1.219 and include the publication fee as set forth in 37 CFR 1.18(d).

The requirement for a fee for consideration of the petition to make special for applications pertaining to Green Technologies has been waived.

The instant petition complies with items 1 – 8 above. Accordingly, the above-identified application has been accorded "special" status.

Telephone inquires concerning this decision should be directed to Henry C. Yuen at 571-272-4856.

This application will be forwarded to the Technology Center Art Unit 3745 for action on the merits commensurate with this decision.

/Henry C. Yuen/

Henry C. Yuen
Quality Assurance Specialist
Technology Center TC 3700

IN THE UNITED STATES PATENT AND TRADEMARK OFFICE

Appln. No:	13/176,230
Applicants:	Jillian Elaine Collier et al.
Filing Date:	July 5, 2011
Title:	NON-ZEOLITE BASE METAL SCR CATALYST
TC/A.U.:	To Be Assigned
Examiner:	To Be Assigned
Confirmation No.:	4206
Docket No.:	JMYT-459US1

PETITION TO MAKE SPECIAL UNDER THE GREEN TECHNOLOGY PILOT PROGRAM - STATEMENTS OF SPECIAL STATUS

Commissioner for Patents
P.O. Box 1450
Alexandria, VA 22313-1450

Sir:

In accordance with the requirements of the Petition to Make Special Under the Green Technology Pilot Program, filed herewith, we respectfully request consideration of the following statements:

1. If the USPTO determines that the claims are directed to multiple inventions (e.g., in a restriction requirement), applicant hereby agrees to make an election without traverse in a telephonic interview, and elect an invention that meets the eligibility requirements of the program.

2. The claims of the above-referenced application are directed to a single invention:

☐ that materially enhances the quality of the environment, or

☒ that materially contributes to:

☐ (1) the discovery or development of renewable energy resources;

☐ (2) the more efficient utilization and conservation of energy resources; or

☒ (3) green house gas emission reduction.

3. The application disclosure is clear on its face that the claimed invention materially contributes to greenhouse gas emission reduction. To avoid any doubt, a statement signed by the attorney/agent registered to practice before the USPTO, in accordance with 37 CFR 1.33(b), explaining how the materiality standard is met is provided below.

    a. The claimed invention of the above-referenced application materially contributes to greenhouse gas emission reduction technologies. Specifically, the above-referenced application relates to an article for treating a gas containing nitrogen oxides. The embodiments of the claimed invention function to reduce the emission of known greenhouse gases, namely nitrogen oxides (NO_X), from combustion engines. Accordingly, the materiality standard is met.

As the requirements of the Green Technology Pilot Program have been met in the above-referenced application, special status and advancement out of turn for examination is respectfully requested.

Respectfully submitted,

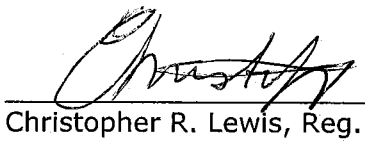

Christopher R. Lewis, Reg. No. 36,201
Christine E. Bradley, Reg. No. 65,752
Attorney for Applicants

CRL/CEB/ap

Dated: July 6, 2011

P.O. Box 980
Valley Forge, PA 19482-0980
(610) 407-0700

The Director is hereby authorized to charge or credit Deposit Account No. **18-0350** for any additional fees, or any underpayment or credit for overpayment in connection herewith..

Doc Code: PET.GREEN
Document Description: Petition for Green Tech Pilot

PTO/SB/420 (11-10)
Approved for use through 01/31/2011. OMB 0651-0062
U.S. Patent and Trademark Office; U. S. DEPARTMENT OF COMMERCE
Under the Paperwork Reduction Act of 1995, no persons are required to respond to a collection of information unless it displays a valid OMB control number.

PETITION TO MAKE SPECIAL UNDER THE GREEN TECHNOLOGY PILOT PROGRAM

Attorney Docket Number: WYN/1750USCON/JDJ	Application Number (if known): 13/176,230	Filing date: July 5, 2011

First Named Inventor: Jillian Elaine Collier

Title: NON-ZEOLITE BASE METAL SCR CATALYST

APPLICANT HEREBY REQUESTS TO PARTICIPATE IN THE GREEN TECHNOLOGY PILOT PROGRAM FOR THE ABOVE-IDENTIFIED APPLICATION. See Instruction Sheet on page 2.

This petition must be timely filed electronically using the USPTO electronic filing system, EFS-Web.

1. By filing this petition:

   Applicant is requesting early publication: Applicant hereby requests early publication under 37 CFR 1.219 and the publication fee set forth in 37 CFR 1.18(d) accompanies this request.

2. By filing this petition: applicant is agreeing to make an election without traverse in a telephonic interview and elect an invention that meets the eligibility requirements for the Green Technology Pilot Program, if the Office determines that the claims are not obviously directed to a single invention. See Instruction Sheet.

3. This request is accompanied by statements of special status for the eligibility requirement.

4. The application contains no more than three (3) independent claims and twenty (20) total claims.

5. The application does not contain any multiple dependent claims.

6. Other attachments: Statement of Special Status

Signature	Date July 6, 2011
Name (Print/Typed) Christopher R. Lewis	Registration Number 36,201

Note: *Signatures of all the inventors or assignees of record of the entire interest or their representative(s) are required in accordance with 37 CFR 1.33 and 11.18. Please see 37 CFR 1.4(d) for the form of the signature. If necessary, submit multiple forms for more than one signature see below*.*

☐ *Total of _____ forms are submitted.

The information is required to obtain or retain a benefit by the public which is to file (and by the USPTO to process) an application. Confidentiality is governed by 35 U.S.C. 122 and 37 CFR 1.11 and 1.14. This collection is estimated to take 12 hours to complete, including gathering, preparing, and submitting the completed application form to the USPTO. Time will vary depending upon the individual case. Any comments on the amount of time you require to complete this form and/or suggestions for reducing this burden, should be sent to the Chief Information Officer, U.S. Patent and Trademark Office, U.S. Department of Commerce, P.O. Box 1450, Alexandria, VA 22313-1450. DO NOT SEND FEES OR COMPLETED FORMS TO THIS ADDRESS. **SEND TO: Commissioner for Patents, P.O. Box 1450, Alexandria, VA 22313-1450.**

If you need assistance in completing the form, call 1-800-PTO-9199 and select option 2.

PTO/SB/420 (11-10)
Approved for use through 01/31/2011. OMB 0651-0062
U.S. Patent and Trademark Office; U. S. DEPARTMENT OF COMMERCE
Under the Paperwork Reduction Act of 1995, no persons are required to respond to a collection of information unless it displays a valid OMB control number.

Instruction Sheet for Petition to Make Special Under the Green Technology Pilot Program

(Not to be Submitted to the USPTO)

The following is a summary of the requirements (for more information see the notices (i) "Pilot Program for Green Technologies Including Greenhouse Gas Reduction," (ii) "Elimination of Classification Requirement in the Green Technology Pilot Program," and (iii) "Expansion and Extension of the Green Technology Pilot Program," available on the USPTO web site at http:// www.uspto.gov/patents/init_events/green_tech.jsp):

1) The application must be a non-reissue, non-provisional utility application filed under 35 U.S.C. 111 (a), or an international application that has entered the national stage in compliance with 35 U.S.C. 371, irrespective of the filing date of the application. Reexamination proceedings are excluded from this pilot program.

2) The application must contain three or fewer independent claims and twenty or fewer total claims. The application must not contain any multiple dependent claims. For an application that contains more than three independent claims or twenty total claims, or multiple dependent claims, applicant must file a preliminary amendment in compliance with 37 CFR 1.121 to cancel the excess claims and/or the multiple dependent claims at the time the petition to make special is filed.

3) The claims must be directed to a single invention that materially enhances the quality of the environment, or that materially contributes to: (1) the discovery or development of renewable energy resources; (2) the more efficient utilization and conservation of energy resources; or (3) green house gas emission reduction (see the eligibility requirements of sections II and III of the notice (i) cited above). The petition must include a statement that, if the USPTO determines that the claims are directed to multiple inventions (e.g., in a restriction requirement), applicant will agree to make an election without traverse in a telephonic interview, and elect an invention that meets the eligibility requirements in section II or III of the notice (i) cited above.

4) The petition to make special must be timely filed electronically using the USPTO electronic filing system, EFS-Web, and selecting the document description of "Petition for Green Tech Pilot" on the EFS-Web screen. Applicant should use form PTO/SB/420, which is available as a Portable Document Format (PDF) fillable form in EFS-Web and on the USPTO Web site.

5) The petition to make special must be filed at least one day prior to the date that a first Office action (which may be an Office action containing only a restriction requirement) appears in the Patent Application Information Retrieval (PAIR) system. Applicant may check the status of the application using PAIR.

6) The petition to make special must be accompanied by a request for early publication in compliance with 37 CFR 1.219 and the publication fee set forth in 37 CFR 1.18(d).

Privacy Act Statement

The **Privacy Act of 1974 (P.L. 93-579)** requires that you be given certain information in connection with your submission of the attached form related to a patent application or patent. Accordingly, pursuant to the requirements of the Act, please be advised that: (1) the general authority for the collection of this information is 35 U.S.C. 2(b)(2); (2) furnishing of the information solicited is voluntary; and (3) the principal purpose for which the information is used by the U.S. Patent and Trademark Office is to process and/or examine your submission related to a patent application or patent. If you do not furnish the requested information, the U.S. Patent and Trademark Office may not be able to process and/or examine your submission, which may result in termination of proceedings or abandonment of the application or expiration of the patent.

The information provided by you in this form will be subject to the following routine uses:

1. The information on this form will be treated confidentially to the extent allowed under the Freedom of Information Act (5 U.S.C. 552) and the Privacy Act (5 U.S.C 552a). Records from this system of records may be disclosed to the Department of Justice to determine whether disclosure of these records is required by the Freedom of Information Act.
2. A record from this system of records may be disclosed, as a routine use, in the course of presenting evidence to a court, magistrate, or administrative tribunal, including disclosures to opposing counsel in the course of settlement negotiations.
3. A record in this system of records may be disclosed, as a routine use, to a Member of Congress submitting a request involving an individual, to whom the record pertains, when the individual has requested assistance from the Member with respect to the subject matter of the record.
4. A record in this system of records may be disclosed, as a routine use, to a contractor of the Agency having need for the information in order to perform a contract. Recipients of information shall be required to comply with the requirements of the Privacy Act of 1974, as amended, pursuant to 5 U.S.C. 552a(m).
5. A record related to an International Application filed under the Patent Cooperation Treaty in this system of records may be disclosed, as a routine use, to the International Bureau of the World Intellectual Property Organization, pursuant to the Patent Cooperation Treaty.
6. A record in this system of records may be disclosed, as a routine use, to another federal agency for purposes of National Security review (35 U.S.C. 181) and for review pursuant to the Atomic Energy Act (42 U.S.C. 218(c)).
7. A record from this system of records may be disclosed, as a routine use, to the Administrator, General Services, or his/her designee, during an inspection of records conducted by GSA as part of that agency's responsibility to recommend improvements in records management practices and programs, under authority of 44 U.S.C. 2904 and 2906. Such disclosure shall be made in accordance with the GSA regulations governing inspection of records for this purpose, and any other relevant (*i.e.*, GSA or Commerce) directive. Such disclosure shall not be used to make determinations about individuals.
8. A record from this system of records may be disclosed, as a routine use, to the public after either publication of the application pursuant to 35 U.S.C. 122(b) or issuance of a patent pursuant to 35 U.S.C. 151. Further, a record may be disclosed, subject to the limitations of 37 CFR 1.14, as a routine use, to the public if the record was filed in an application which became abandoned or in which the proceedings were terminated and which application is referenced by either a published application, an application open to public inspection or an issued patent.
9. A record from this system of records may be disclosed, as a routine use, to a Federal, State, or local law enforcement agency, if the USPTO becomes aware of a violation or potential violation of law or regulation.

UNITED STATES PATENT AND TRADEMARK OFFICE

UNITED STATES DEPARTMENT OF COMMERCE
United States Patent and Trademark Office
Address: COMMISSIONER FOR PATENTS
P.O. Box 1450
Alexandria, Virginia 22313-1450
www.uspto.gov

APPLICATION NO.	FILING DATE	FIRST NAMED INVENTOR	ATTORNEY DOCKET NO.	CONFIRMATION NO.
13/176,230	07/05/2011	Jillian Elaine Collier	WYN/1750USCON/JDJ	4206

23122 7590 08/22/2011

RATNERPRESTIA
P.O. BOX 980
VALLEY FORGE, PA 19482

EXAMINER	
VANOY, TIMOTHY C	

ART UNIT	PAPER NUMBER
1734	

MAIL DATE	DELIVERY MODE
08/22/2011	PAPER

Please find below and/or attached an Office communication concerning this application or proceeding.

The time period for reply, if any, is set in the attached communication.

UNITED STATES PATENT AND TRADEMARK OFFICE

Commissioner for Patents
United States Patent and Trademark Office
P.O. Box 1450
Alexandria, VA 22313-1450
www.uspto.gov

AUG 22 2011

RATNERPRESTIA
P.O. BOX 980
VALLEY FORGE PA 19482

In re Application of :
Jillian E. Collier et al. :
Application No. 13/176,230 :
Filed: July 05, 2011 :
Attorney Docket No. WYN/1750USCON/JDJ :

DECISION ON PETITION
TO MAKE SPECIAL UNDER
THE GREEN TECHNOLOGY
PILOT PROGRAM

This is a decision on the petition under 37 CFR 1.102, filed July 06, 2011, to make the above-identified application special under the pilot program for applications pertaining to Green Technologies as set forth in 74 Federal Register Notice 64666 (December 8, 2009) and amended by 75 Federal Register Notice 28554 (May 21, 2010) and 75 Federal Register Notice 69049 (November 10, 2010).

The petition is **GRANTED**.

A grantable petition to make an application special under 37 CFR 1.102 and the pilot program as set forth in 74 FR 64666 must be directed to a nonprovisional application filed under 35 USC 111(a) or be a national stage entry under 35 USC 371, exclusive of any reissue applications.

In order to qualify for special status, the following requirements must be met. 1) The application must have no more than 3 independent claims and no more than 20 total claims. 2) The application must not contain any multiple dependent claims. 3) The petition must state the basis for seeking special status, i.e., the claimed invention either: A) materially enhances the quality of the environment or B) materially contributes to: i) the discovery or development of renewable energy resources, ii) the more efficient utilization and conservation of energy resources, or iii) greenhouse gas emission reduction. 4) If the disclosure is not clear on its face that the claimed invention materially contributes under category (A) or (B), the petition must be accompanied by a statement by the applicant, assignee, or an attorney/agent registered to practice before the Office explaining how the materiality standard is met. 5) A statement that applicant will agree to make an election without traverse in a telephonic interview if a restriction requirement is made by the examiner. 6) The petition to make special must be filed electronically. 7) The petition must be filed at least one day prior to the date that a first Office Action appears in the Patent Application Information Retrieval (PAIR) system. 8) The petition must be accompanied by a request for early publication in compliance with 37 CFR 1.219 and include the publication fee as set forth in 37 CFR 1.18(d).

The requirement for a fee for consideration of the petition to make special for applications pertaining to Green Technologies has been waived.

The instant petition complies with items 1 – 8 above. Accordingly, the above-identified application has been accorded "special" status.

Telephone inquires concerning this decision should be directed to Blaine Copenheaver at 571-272-1156.

The application is being forwarded to the examiner for action on the merits commensurate with this decision.

/Blaine Copenheaver/

Blaine Copenheaver
Quality Assurance Specialist
Technology Center 1700

UNITED STATES PATENT AND TRADEMARK OFFICE

Commissioner for Patents
United States Patent and Trademark Office
P.O. Box 1450
Alexandria, VA 22313-1450
www.uspto.gov

BURNS & LEVINSON, LLP
125 SUMMER STREET
BOSTON MA 02110

MAILED

NOV 02 2011

OFFICE OF PETITIONS

In re Application of :
McHugh et al. :
Application No. 13/176,268 : DECISION GRANTING PETITION
Filed: 07/05/2011 : UNDER 37 CFR 1.78(a)(6)
Attorney Docket No. 40645-106 CIP :

This is a decision on the petition under 37 CFR 1.78(a)(6),[1] filed October 19, 2011, to accept an unintentionally delayed claim under 35 U.S.C. 119(e) for the benefit of prior-filed provisional Application No. 60/912,550 filed April 18, 2007.

The petition is **GRANTED**.

A petition under 37 CFR 1.78(a)(6) is only applicable to those applications filed on or after November 29, 2000. Further, the petition is appropriate only after expiration of the period specified in 37 CFR 1.78(a)(5)(ii) and must be filed during the pendency of the nonprovisional

---

[1] The submission of a petition under 37 CFR 1.78(a)(6) and surcharge set forth in 37 CFR 1.17(t) are required to correctly identify the prior provisional application number and grant the relief requested. *See Eighteen-Month Publication Questions and Answers, http://www.uspto.gov/patents/law/aipla/18month/18monthfaq.jsp:*

> **CX9. Applicant filed an application with a claim for the benefit of an earlier copending nonprovisional application, Application No. 05/123,455. The benefit claim was filed within four months from the actual filing date of the application, but referenced an incorrect application number (should have been 06/123,456. If applicant wants to correct the application number after the four month period would a petition under 37 CFR 1.78(a)(3) and the surcharge set forth in 37 CFR 1.17(t) be required?** (added 4Feb2005)
>
> Yes, a petition and the surcharge would be required to correctly identify the prior application number because a benefit claim pursuant to 37 CFR 1.78(a)(2) requires identification of the application number and the Office enters the prior application's application number to schedule the application for publication.

application. In addition, the petition must be accompanied by:

(1) the reference required by 35 U.S.C. 119(e) and 37 CFR 1.78(a)(5)(i) to the prior-filed application, unless previously submitted;

(2) the surcharge set forth in § 1.17(t); and

(3) a statement that the entire delay between the date the claim was due under 37 CFR 1.78(a)(5)(ii) and the date the claim was filed was unintentional. The Director may require additional information where there is a question whether the delay was unintentional.

Additionally, the present nonprovisional application must be pending at the time of filing of the reference to the prior-filed provisional application as required by 37 CFR 1.78(a)(5)(ii). Further, the nonprovisional application claiming the benefit of the prior-filed provisional application must have been filed within twelve months of the filing date of the prior-filed provisional application.

All of the above requirements having been satisfied, the late claim under 35 U.S.C. 119(e) for the benefit of the prior-filed provisional application is accepted as being unintentionally delayed.

The granting of the petition to accept the delayed benefit claim to the prior-filed application under 37 CFR 1.78(a)(6) should not be construed as meaning that this application is entitled to the benefit of the filing date of the prior-filed application. In order for this application to be entitled to the benefit of the prior-filed application, all other requirements under 35 U.S.C. 119(e) and 37 CFR 1.78(a)(4) and (a)(5) must be met. Similarly, the fact that the corrected Filing Receipt accompanying this decision on petition includes the prior-filed application should not be construed as meaning that applicant is entitled to the claim for benefit of priority to the prior-filed application noted thereon. Accordingly, the examiner will, in due course, consider this benefit claim and determine whether the application is entitled to the benefit of the earlier filing date.

The Office notes that the preliminary amendment filed October 19, 2011, to add the reference to the prior-filed provisional application in the first sentence of the specification following the title is not acceptable as drafted because it improperly incorporates by reference prior-filed Application No. 60/912,550. An incorporation by reference statement added after an application's filing date is not effective because no new matter can be added to an application after its filing date (*see* 35 U.S.C. 132(a)). If an incorporation by reference statement is included in an amendment to the specification to add a benefit claim after the filing date of the application, the amendment would not be proper. When a benefit claim is submitted after the filing of an application, the reference to the prior application cannot include an incorporation by reference statement of the prior application.[2] See Dart Industries v. Banner, 636 F.2d 684, 207

[2] Applicants may retain the incorporation by reference statement of prior-filed nonprovisional Application No. 12/148,397 because the incorporation by reference statement was present on filing Application No. 13/176,268.

USPQ 273 (C.A.D.C. 1980). See MPEP 201.06(c) and 608.04(b). Accordingly, applicants must file a new amendment removing the incorporation by reference statement of prior-filed provisional Application No. 60/912,550.

A corrected Filing Receipt, which includes the benefit claim to the prior-filed provisional application, accompanies this decision on petition.

Applicants submitted a $400.00 fee for the filing of the present petition. The Office notes that the required surcharge set forth in 37 CFR 1.17(t) for the acceptance of an unintentionally delayed claim for priority under 35 U.S.C. 119(e) is $1,410.00. The Office will charge the deposit account the balance due of $1,010.00, as authorized.

Any inquiries concerning this decision may be directed to the undersigned at (571) 272-3211. All other inquiries concerning either the examination procedures or status of the application should be directed to the Technology Center.

The application is being forwarded to Technology Center AU 1771 for consideration by the examiner of the claim under 35 U.S.C. 119(e) for the benefit of the prior-filed provisional application.

C. T. Donnell

Christina Tartera Donnell
Senior Petitions Attorney
Office of Petitions

ATTACHMENT: Corrected Filing Receipt

UNITED STATES PATENT AND TRADEMARK OFFICE

UNITED STATES DEPARTMENT OF COMMERCE
United States Patent and Trademark Office
Address: COMMISSIONER FOR PATENTS
P.O. Box 1450
Alexandria, Virginia 22313-1450
www.uspto.gov

APPLICATION NUMBER	FILING or 371(c) DATE	GRP ART UNIT	FIL FEE REC'D	ATTY.DOCKET.NO	TOT CLAIMS	IND CLAIMS
13/176,268	07/05/2011	1771	722	40645-106 CIP	30	3

CONFIRMATION NO. 4281

26486
BURNS & LEVINSON, LLP
125 SUMMER STREET
BOSTON, MA 02110

UPDATED FILING RECEIPT

OC00000050712986

Date Mailed: 11/02/2011

Receipt is acknowledged of this non-provisional patent application. The application will be taken up for examination in due course. Applicant will be notified as to the results of the examination. Any correspondence concerning the application must include the following identification information: the U.S. APPLICATION NUMBER, FILING DATE, NAME OF APPLICANT, and TITLE OF INVENTION. Fees transmitted by check or draft are subject to collection. Please verify the accuracy of the data presented on this receipt. **If an error is noted on this Filing Receipt, please submit a written request for a Filing Receipt Correction. Please provide a copy of this Filing Receipt with the changes noted thereon. If you received a "Notice to File Missing Parts" for this application, please submit any corrections to this Filing Receipt with your reply to the Notice. When the USPTO processes the reply to the Notice, the USPTO will generate another Filing Receipt incorporating the requested corrections**

Applicant(s)

Lawrence F. McHugh, North Andover, MA;
Leonid Shekhter, Ashland, MA;

Assignment For Published Patent Application

Orchard Material Technology LLC, North Andover, MA

Power of Attorney: The patent practitioners associated with Customer Number 26486

Domestic Priority data as claimed by applicant

This application is a CIP of 12/148,397 04/18/2008
which claims benefit of 60/912,550 04/18/2007

Foreign Applications (You may be eligible to benefit from the **Patent Prosecution Highway** program at the USPTO. Please see http://www.uspto.gov for more information.)

If Required, Foreign Filing License Granted: 07/14/2011

The country code and number of your priority application, to be used for filing abroad under the Paris Convention, is **US 13/176,268**

Projected Publication Date: 02/09/2012

Non-Publication Request: No

Early Publication Request: No
**** SMALL ENTITY ****

Title

PRODUCTION OF HYDROGEN THROUGH OXIDATION OF METAL SULFIDES

Preliminary Class

208

PROTECTING YOUR INVENTION OUTSIDE THE UNITED STATES

Since the rights granted by a U.S. patent extend only throughout the territory of the United States and have no effect in a foreign country, an inventor who wishes patent protection in another country must apply for a patent in a specific country or in regional patent offices. Applicants may wish to consider the filing of an international application under the Patent Cooperation Treaty (PCT). An international (PCT) application generally has the same effect as a regular national patent application in each PCT-member country. The PCT process **simplifies** the filing of patent applications on the same invention in member countries, but **does not result** in a grant of "an international patent" and does not eliminate the need of applicants to file additional documents and fees in countries where patent protection is desired.

Almost every country has its own patent law, and a person desiring a patent in a particular country must make an application for patent in that country in accordance with its particular laws. Since the laws of many countries differ in various respects from the patent law of the United States, applicants are advised to seek guidance from specific foreign countries to ensure that patent rights are not lost prematurely.

Applicants also are advised that in the case of inventions made in the United States, the Director of the USPTO must issue a license before applicants can apply for a patent in a foreign country. The filing of a U.S. patent application serves as a request for a foreign filing license. The application's filing receipt contains further information and guidance as to the status of applicant's license for foreign filing.

Applicants may wish to consult the USPTO booklet, "General Information Concerning Patents" (specifically, the section entitled "Treaties and Foreign Patents") for more information on timeframes and deadlines for filing foreign patent applications. The guide is available either by contacting the USPTO Contact Center at 800-786-9199, or it can be viewed on the USPTO website at http://www.uspto.gov/web/offices/pac/doc/general/index.html.

For information on preventing theft of your intellectual property (patents, trademarks and copyrights), you may wish to consult the U.S. Government website, http://www.stopfakes.gov. Part of a Department of Commerce initiative, this website includes self-help "toolkits" giving innovators guidance on how to protect intellectual property in specific countries such as China, Korea and Mexico. For questions regarding patent enforcement issues, applicants may call the U.S. Government hotline at 1-866-999-HALT (1-866-999-4158).

LICENSE FOR FOREIGN FILING UNDER

Title 35, United States Code, Section 184

Title 37, Code of Federal Regulations, 5.11 & 5.15

GRANTED

The applicant has been granted a license under 35 U.S.C. 184, if the phrase "IF REQUIRED, FOREIGN FILING LICENSE GRANTED" followed by a date appears on this form. Such licenses are issued in all applications where the conditions for issuance of a license have been met, regardless of whether or not a license may be required as

set forth in 37 CFR 5.15. The scope and limitations of this license are set forth in 37 CFR 5.15(a) unless an earlier license has been issued under 37 CFR 5.15(b). The license is subject to revocation upon written notification. The date indicated is the effective date of the license, unless an earlier license of similar scope has been granted under 37 CFR 5.13 or 5.14.

This license is to be retained by the licensee and may be used at any time on or after the effective date thereof unless it is revoked. This license is automatically transferred to any related applications(s) filed under 37 CFR 1.53(d). This license is not retroactive.

The grant of a license does not in any way lessen the responsibility of a licensee for the security of the subject matter as imposed by any Government contract or the provisions of existing laws relating to espionage and the national security or the export of technical data. Licensees should apprise themselves of current regulations especially with respect to certain countries, of other agencies, particularly the Office of Defense Trade Controls, Department of State (with respect to Arms, Munitions and Implements of War (22 CFR 121-128)); the Bureau of Industry and Security, Department of Commerce (15 CFR parts 730-774); the Office of Foreign AssetsControl, Department of Treasury (31 CFR Parts 500+) and the Department of Energy.

NOT GRANTED

No license under 35 U.S.C. 184 has been granted at this time, if the phrase "IF REQUIRED, FOREIGN FILING LICENSE GRANTED" DOES NOT appear on this form. Applicant may still petition for a license under 37 CFR 5.12, if a license is desired before the expiration of 6 months from the filing date of the application. If 6 months has lapsed from the filing date of this application and the licensee has not received any indication of a secrecy order under 35 U.S.C. 181, the licensee may foreign file the application pursuant to 37 CFR 5.15(b).

Doc code : PET.OP.AGE
Description : Petition to make special based on Age/Health

PTO/SB/130 (07-09)
Approved for use through 07/31/2012. OMB 0651- 0031
U.S. Patent and Trademark Office; U.S. DEPARTMENT OF COMMERCE
Under the Paperwork Reduction Act of 1995, no persons are required to respond to a collection of information unless it contains a valid OMB control number

PETITION TO MAKE SPECIAL BASED ON AGE FOR ADVANCEMENT OF EXAMINATION UNDER 37 CFR 1.102(c)(1)

Application Information

Application Number	13176335	Confirmation Number	4405	Filing Date	2011-07-05
Attorney Docket Number (optional)	1884.001A	Art Unit		Examiner	
First Named Inventor	Larry G. Keast				
Title of Invention	TOP DRIVE WITH AN AIRLIFT THREAD COMPENSATOR AND A HOLLOW CYLINDER ROD PROVIDING MINIMUM FLEXING OF CONDUIT				

Attention: Office of Petitions
An application may be made special for advancement of examination upon filing of a petition showing that the applicant is 65 years of age, or more. No fee is required with such a petition. See 37 CFR 1.102(c)(1) and MPEP 708.02 (IV).

APPLICANT HEREBY PETITIONS TO MAKE SPECIAL FOR ADVANCEMENT OF EXAMINATION IN THIS APPLICATION UNDER 37 CFR 1.102(c)(1) and MPEP 708.02 (IV) ON THE BASIS OF THE APPLICANT'S AGE.

A grantable petition requires one of the following items:
(1) Statement by one named inventor in the application that he/she is 65 years of age, or more; or
(2) Certification by a registered attorney/agent having evidence such as a birth certificate, passport, driver's license, etc. showing one named inventor in the application is 65 years of age, or more.

Name of Inventor who is 65 years of age, or older

Given Name	Middle Name	Family Name	Suffix
Larry	G.	Keast	

A signature of the applicant or representative is required in accordance with 37 CFR 1.33 and 10.18.
Please see 37 CFR 1.4(d) for the format of the signature.

Select (1) or (2) :

○ (1) I am an inventor in this application and I am 65 years of age, or more.

● (2) I am an attorney or agent registered to practice before the Patent and Trademark Office, and I certify that I am in possession of evidence, and will retain such in the application file record, showing that the inventor listed above is 65 years of age, or more.

Signature	/WBUSKOP/	Date (YYYY-MM-DD)	2011-07-05
Name	Wendy Buskop	Registration Number	32202

PTO/SB/130 (07-09)
Approved for use through 07/31/2012. OMB 0651- 0031
U.S. Patent and Trademark Office; U.S. DEPARTMENT OF COMMERCE
Under the Paperwork Reduction Act of 1995, no persons are required to respond to a collection of information unless it contains a valid OMB control number

Privacy Act Statement

The Privacy Act of 1974 (P.L. 93-579) requires that you be given certain information in connection with your submission of the attached form related to a patent application or patent. Accordingly, pursuant to the requirements of the Act, please be advised that: (1) the general authority for the collection of this information is 35 U.S.C. 2(b)(2); (2) furnishing of the information solicited is voluntary; and (3) the principal purpose for which the information is used by the U.S. Patent and Trademark Office is to process and/or examine your submission related to a patent application or patent. If you do not furnish the requested information, the U.S. Patent and Trademark Office may not be able to process and/or examine your submission, which may result in termination of proceedings or abandonment of the application or expiration of the patent.

The information provided by you in this form will be subject to the following routine uses:

1. The information on this form will be treated confidentially to the extent allowed under the Freedom of Information Act (5 U.S.C. 552) and the Privacy Act (5 U.S.C. 552a). Records from this system of records may be disclosed to the Department of Justice to determine whether the Fr eedom of Information Act requires disclosure of these records.

2. A record from this system of records may be disclosed, as a routine use, in the course of presenting evidence to a court, magistrate, or administrative tribunal, including disclosures to opposing counsel in the course of settlement negotiations.

3. A record in this system of records may be disclosed, as a routine use, to a Member of Congress submitting a request involving an individual, to whom the record pertains, when the individual has requested assistance from the Member with respect to the subject matter of the record.

4. A record in this system of records may be disclosed, as a routine use, to a contractor of the Agency having need for the information in order to perform a contract. Recipients of information shall be required to comply with the requirements of the Privacy Act of 1974, as amended, pursuant to 5 U.S.C. 552a(m).

5. A record related to an International Application filed under the Patent Cooperation Treaty in this system of records may be disclosed, as a routine use, to the International Bureau of the World Intellectual Property Organization, pursuant to the Patent Cooperation Treaty.

6. A record in this system of records may be disclosed, as a routine use, to another federal agency for purposes of National Security review (35 U.S.C. 181) and for review pursuant to the Atomic Energy Act (42 U.S.C. 218(c)).

7. A record from this system of records may be disclosed, as a routine use, to the Administrator, General Services, or his/her designee, during an inspection of records conducted by GSA as part of that agency's responsibility to recommend improvements in records management practices and programs, under authority of 44 U.S.C. 2904 and 2906. Such disclosure shall be made in accordance with the GSA regulations governing inspection of records for this purpose, and any other relevant (i.e., GSA or Commerce) directive. Such disclosure shall not be used to make determinations about indivi duals.

8. A record from this system of records may be disclosed, as a routine use, to the public after either publication of the application pursuant to 35 U.S.C. 122(b) or issuance of a patent pursuant to 35 U.S.C. 151. Further, a record may be disclosed, subject to the limitations of 37 CFR 1.14, as a routine use, to the public if the record was filed in an application which became abandoned or in which the proceedings were terminated and which application is referenced by either a published application, an application open to public inspections or an issued patent.

9. A record from this system of records may be disclosed, as a routine use, to a Federal, State, or local law enforcement agency, if the USPTO becomes aware of a violation or potential violation of law or regulation.

UNITED STATES PATENT AND TRADEMARK OFFICE

Commissioner for Patents
United States Patent and Trademark Office
P.O. Box 1450
Alexandria, VA 22313-1450
www.uspto.gov

In re Application of
Larry G. Keast

Application No. 13176335

Filed:

Attorney Docket No. 1884.001A

:DECISION ON PETITION TO MAKE SPECIAL
:UNDER 37 CFR 1.102(c)(1)

This is a decision on the electronic petition under 37 CFR 1.102 (c)(1), filed 05-JUL-2011 to make the above-identified application special based on applicant's age as set forth in MPEP § 708.02, Section IV.

The petition is **GRANTED**.

A grantable petition to make an application special under 37 CFR 1.102(c)(1), MPEP § 708.02, Section IV: Applicant's Age must include a statement by applicant or a registered practitioner having evidence that applicant is at least 65 years of age. No fee is required.

Accordingly, the above-identified application has been accorded "special" status and will be taken up for action by the examiner upon the completion of all pre-examination processing.

Telephone inquiries concerning this electronic decision should be directed to the Electronic Business Center at 866-217-9197.

All other inquiries concerning either the examination or status of the application should be directed to the Technology Center.

UNITED STATES PATENT AND TRADEMARK OFFICE

Commissioner for Patents
United States Patent and Trademark Office
P.O. Box 1450
Alexandria, VA 22313-1450
www.uspto.gov

MAILED

APR 02 2012

OFFICE OF PETITIONS

PEARNE & GORDON LLP
1801 EAST 9TH STREET
SUITE 1200
CLEVELAND OH 44114-3108

In re Application of
WRIGHT, et al
Application No.: 13/176,406
Filed: July 5, 2011
Attorney Docket No.: ADAM-45351US1
For: SECONDARY GAME SYSTEM FOR A GAMING TERMINAL NETWORK

: DECISION ON REQUEST TO
: PARTICIPATE IN THE PATENT
: PROSECUTION HIGHWAY
: PROGRAM AND PETITION
: TO MAKE SPECIAL UNDER
: 37 CFR 1.102(a)

This is a decision on the request to participate in the Patent Prosecution Highway (PPH) program and the petition under 37 CFR 1.102(a), filed February 6, 2012, to make the above-identified application special.

The request and petition are **DISMISSED**.

A grantable request to participate in the PPH program and petition to make special require:

(1) The U.S. application must validly claim priority under 35 U.S.C. 119(a) to one or more applications filed in the IPAU;

(2) All of the claims in the U.S. application must sufficiently correspond or be amended to sufficiently correspond to the allowable/patentable claim(s) in the IPAU application(s); and

(3) Examination of the U.S. application has not begun;

(4) Applicant must submit a copy of all of the Office actions from each of the IPAU application(s);

(5) Applicant must submit:

a. An IDS listing the documents cited by the IPAU examiner in the IPAU Office action(s) (unless already submitted in this application)
b. Copies of documents except U.S. patents or U.S. patent application publications (unless already submitted in this application); and

Conditions (1-4) above are considered to have been met. However, the request to participate in the PPH pilot program and petition fail to meet condition (5).

Regarding the requirement of condition (5), applicant has failed to submit a copy of document WO2006/104731as indicated in examiner in the JPO office action.

Applicant is given **ONE** opportunity within a time period of **ONE MONTH or THIRTY DAYS**, whichever is longer, from the mailing date of this decision to correct the deficiencies. **NO EXTENSION OF TIME UNDER 37 CFR 1.136 IS PERMITTED.** If the deficiencies are not corrected with the time period given, the application will await action in its regular turn.

Response must be filed via the Electronic Filing System (EFS) using the document description: Petition to make special under Patent Pros Hwy. Any preliminary amendments and IDS submitted with the PPH documents must be separately indexed as a preliminary amendment and IDS, respectively.

Telephone inquiries concerning this decision should be directed to the undersigned at (571) 272-6735.

All other inquiries concerning the examination or status of the application is accessible in the PAIR system at http://www.uspto.gov/ebc/index.html.

/Diane Goodwyn/
Diane Goodwyn
Petitions Examiner
Office of Petitions

UNITED STATES PATENT AND TRADEMARK OFFICE

Commissioner for Patents
United States Patent and Trademark Office
P.O. Box 1450
Alexandria, VA 22313-1450
www.uspto.gov

MAILED

APR 06 2012

OFFICE OF PETITIONS

PEARNE & GORDON LLP
1801 EAST 9TH STREET
SUITE 1200
CLEVELAND OH 44114-3108

CORRECTED

: DECISION ON REQUEST TO
: PARTICIPATE IN THE PATENT
: PROSECUTION HIGHWAY
: PROGRAM AND PETITION
: TO MAKE SPECIAL UNDER
: 37 CFR 1.102(a)

In re Application of
WRIGHT, et al
Application No.: 13/176,406
Filed: July 5, 2011
Attorney Docket No.: ADAM-45351US1
For: SECONDARY GAME SYSTEM FOR A GAMING TERMINAL NETWORK

This is a decision on the request to participate in the Patent Prosecution Highway (PPH) program and the petition under 37 CFR 1.102(a), filed February 6, 2012, to make the above-identified application special.

The request and petition are **GRANTED.**

A grantable request to participate in the PPH program and petition to make special require:

(1) The U.S. application must validly claim priority under 35 U.S.C. 119(a) to one or more applications filed in the IPAU;

(2) All of the claims in the U.S. application must sufficiently correspond or be amended to sufficiently correspond to the allowable/patentable claim(s) in the IPAU application(s); and

(3) Examination of the U.S. application has not begun;

(4) Applicant must submit a copy of all of the Office actions from each of the IPAU application(s);

(5) Applicant must submit:

a. An IDS listing the documents cited by the IPAU examiner in the IPAU Office action(s) (unless already submitted in this application)
b. Copies of documents except U.S. patents or U.S. patent application publications (unless already submitted in this application); and

The request to participate in the PPH pilot program and petition comply with the above requirements. Accordingly, the above-identified application has been accorded "special" status.

Telephone inquiries concerning this decision should be directed to the undersigned at (571) 272-6735.

All other inquiries concerning the examination or status of the application is accessible in the PAIR system at http://www.uspto.gov/ebc.index.html.

This application is being forwarded to the examiner for action on the merits commensurate with this decision.

/Diane Goodwyn/
Diane Goodwyn
Petitions Examiner
Office of Petitions

UNITED STATES PATENT AND TRADEMARK OFFICE

UNITED STATES DEPARTMENT OF COMMERCE
United States Patent and Trademark Office
Address: COMMISSIONER FOR PATENTS
P.O. Box 1450
Alexandria, Virginia 22313-1450
www.uspto.gov

APPLICATION NO.	FILING DATE	FIRST NAMED INVENTOR	ATTORNEY DOCKET NO.	CONFIRMATION NO.
13/176,419	07/05/2011	Erik Eigil OLESEN	31558U	4566

20529 7590 08/10/2011

THE NATH LAW GROUP
112 South West Street
Alexandria, VA 22314

EXAMINER	
ART UNIT	PAPER NUMBER
1742	

MAIL DATE	DELIVERY MODE
08/10/2011	PAPER

Please find below and/or attached an Office communication concerning this application or proceeding.

The time period for reply, if any, is set in the attached communication.

UNITED STATES PATENT AND TRADEMARK OFFICE

Commissioner for Patents
United States Patent and Trademark Office
P.O. Box 1450
Alexandria, VA 22313-1450
www.uspto.gov

AUG 10 2011

CST

In re application of	:	DECISION ON REQUEST TO
Erik Eigil Olesen et al	:	PARTICIPATE IN PATENT
Serial No. 13/176,419	:	PROSECUTION HIGHWAY
Filed: July 5, 2011	:	PILOT PROGRAM AND
For: METHOD OF MANUFACTURING	:	PETITION TO MAKE SPECIAL
PRE-BENT WIND TURBINE BLADES	:	UNDER 37 CFR 1.102(a)

This is a decision on the request to participate in the Patent Prosecution Highway (PPH) program filed July 5, 2011.

The request and petition are **GRANTED**.

A grantable request to participate in the PPH program and petition to make special require:

(1) The U.S. application must validly claim priority under 35 U.S.C. 119(a) to one or more applications filed in the EPO, note where the EPO application with similar claims is not the same application from which the U.S. application claims priority that the applicant must identify the relationship between the EPO application with similar claims and the EPO priority application;

(2) Applicant must submit a copy of the allowable/patentable claim(s) from the EPO application(s);

(3) Applicant must ensure that all the claims in the U.S. application must sufficiently correspond or be amended to sufficiently correspond to the allowable/patentable claim(s) in the EPO application(s);

(4) Examination of the U.S. application has not begun;

(5) Applicant must submit a copy of all the office action from each of the EPO application(s) containing the allowable claims that are the basis for the request; and

(6) Applicant must submit:

a. An IDS listing the documents cited by the EPO examiner in the EPO office action (unless already submitted in this application) and
b. Copies of documents except U.S. patents or U.S. patent application publications (unless already submitted in this application).

The request to participate in the PPH program and petition comply with the above requirements. Accordingly, the above-identified application has been accorded "special" status.

The application is being forwarded to the examiner for action on the merits commensurate with this decision.

Any inquiry regarding this decision should be directed to Christine Tierney, Quality Assurance Specialist, at (571) 272-1055.

All other inquiries concerning the examination or status of the application is accessible in the PAIR system at http://www.uspto.gov/ebc/index.html.

/Christine Tierney/

Christine Tierney
Quality Assurance Specialist
Technology Center 1700

Attorney Docket No. GEVO-041/11US 310142-2231 **PATENT**

IN THE UNITED STATES PATENT AND TRADEMARK OFFICE

In re App'n of: Jun URANO *et al.* Confirmation No.: *To Be Assigned*

Serial No.: *To Be Assigned* (Div. of 12/855,276) Group Art Unit: *To Be Assigned*

Filed: July 5, 2011 Examiner: *To Be Assigned*

For: **CYTOSOLIC ISOBUTANOL PATHWAY LOCALIZATION FOR THE PRODUCTION OF ISOBUTANOL**

VIA EFS-WEB

Commissioner for Patents
P.O. Box 1450
Alexandria, VA 22313-1450

PETITION TO MAKE SPECIAL

STATEMENT OF SPECIAL STATUS AND REQUEST TO PARTICIPATE IN THE GREEN TECHNOLOGY PILOT PROGRAM

Dear Sir,

Submitted herewith is the completed USPTO form PTO/SB/420 and a Petition to Make Special Pursuant to the Federal Register Notice of December 8, 2009, Vol. 74, No. 234, pp. 64666-8, to participate in the Green Technology Pilot Program as described in said Notice.

The above-reference application has been not yet been published. In accordance with the requirements for the Pilot Program, please charge Deposit Account No. 50-1283 for the publication fee set forth in 37 CFR 1.18(d).

Applicants submit that the application is directed to a single invention that relates to the development of renewable components for fuel blends, and as such, the claimed invention materially contributes to the discovery or development of renewable energy resources, enhances the quality of the environment and results in a more efficient utilization and conservation of energy resources.

If participation in the Green Technology Pilot Program is granted, Applicants hereby agree to make an election without traverse in a telephonic interview and elect an invention that meets the eligibility requirement if the Office determines that the claims are not directed to a single invention.

Filed concurrently with this petition is a divisional application which claims priority to US Patent Application No. 12/855,276 under 35 U.S.C. §120. The divisional application submitted herewith contains no more than three independent claims and twenty total claims and does not contain any multiple dependent claims.

The Commissioner is hereby authorized to charge any appropriate fees under 37 C.F.R. §§1.16, 1.17, and 1.21 that may be required by this paper, and to credit any overpayment, to Deposit Account No. 50-1283.

Dated: July 5, 2011

Respectfully submitted,
COOLEY LLP

CUSTOMER NO. 58249

By: /Paul A. Wickman/
Paul A. Wickman
Reg. No. 61,242

COOLEY LLP
ATTN: Patent Group
777 6th Street NW, Suite 1100
Washington, DC 20001
Tel: (720) 566-4250
Fax: (202) 842-7899

Doc Code: PET.GREEN
Document Description: Petition for Green Tech Pilot

PTO/SB/420 (11-10)
Approved for use through 01/31/2011. OMB 0651-0062
U.S. Patent and Trademark Office; U. S. DEPARTMENT OF COMMERCE
Under the Paperwork Reduction Act of 1995, no persons are required to respond to a collection of information unless it displays a valid OMB control number.

PETITION TO MAKE SPECIAL UNDER THE GREEN TECHNOLOGY PILOT PROGRAM

Attorney Docket Number: GEVO-041/11US	Application Number (if known): Not Yet Assigned	Filing date: July 5, 2011
First Named Inventor: Jun URANO		
Title: CYTOSOLIC ISOBUTANOL PATHWAY LOCALIZATION FOR THE PRODUCTION OF ISOBUTANOL		

APPLICANT HEREBY REQUESTS TO PARTICIPATE IN THE GREEN TECHNOLOGY PILOT PROGRAM FOR THE ABOVE-IDENTIFIED APPLICATION. See Instruction Sheet on page 2.

This petition must be timely filed electronically using the USPTO electronic filing system, EFS-Web.

1. By filing this petition:

   Applicant is requesting early publication: Applicant hereby requests early publication under 37 CFR 1.219 and the publication fee set forth in 37 CFR 1.18(d) accompanies this request.

2. By filing this petition: applicant is agreeing to make an election without traverse in a telephonic interview and elect an invention that meets the eligibility requirements for the Green Technology Pilot Program, if the Office determines that the claims are not obviously directed to a single invention. See Instruction Sheet.

3. This request is accompanied by statements of special status for the eligibility requirement.

4. The application contains no more than three (3) independent claims and twenty (20) total claims.

5. The application does not contain any multiple dependent claims.

6. Other attachments: Statement of Special Status

Signature /Paul A. Wickman/	Date July 5, 2011
Name (Print/Typed) Paul A. Wickman	Registration Number 61,242

Note: *Signatures of all the inventors or assignees of record of the entire interest or their representative(s) are required in accordance with 37 CFR 1.33 and 11.18. Please see 37 CFR 1.4(d) for the form of the signature. If necessary, submit multiple forms for more than one signature see below*.*

☒ *Total of 1 forms are submitted.

The information is required to obtain or retain a benefit by the public which is to file (and by the USPTO to process) an application. Confidentiality is governed by 35 U.S.C. 122 and 37 CFR 1.11 and 1.14. This collection is estimated to take 12 hours to complete, including gathering, preparing, and submitting the completed application form to the USPTO. Time will vary depending upon the individual case. Any comments on the amount of time you require to complete this form and/or suggestions for reducing this burden, should be sent to the Chief Information Officer, U.S. Patent and Trademark Office, U.S. Department of Commerce, P.O. Box 1450, Alexandria, VA 22313-1450. DO NOT SEND FEES OR COMPLETED FORMS TO THIS ADDRESS. **SEND TO: Commissioner for Patents, P.O. Box 1450, Alexandria, VA 22313-1450.**

If you need assistance in completing the form, call 1-800-PTO-9199 and select option 2.

PTO/SB/420 (11-10)
Approved for use through 01/31/2011. OMB 0651-0062
U.S. Patent and Trademark Office; U. S. DEPARTMENT OF COMMERCE
Under the Paperwork Reduction Act of 1995, no persons are required to respond to a collection of information unless it displays a valid OMB control number.

Instruction Sheet for Petition to Make Special Under the Green Technology Pilot Program

(Not to be Submitted to the USPTO)

The following is a summary of the requirements (for more information see the notices (i) "Pilot Program for Green Technologies Including Greenhouse Gas Reduction," (ii) "Elimination of Classification Requirement in the Green Technology Pilot Program," and (iii) "Expansion and Extension of the Green Technology Pilot Program," available on the USPTO web site at http://www.uspto.gov/patents/init_events/green_tech.jsp):

1) The application must be a non-reissue, non-provisional utility application filed under 35 U.S.C. 111 (a), or an international application that has entered the national stage in compliance with 35 U.S.C. 371, irrespective of the filing date of the application. Reexamination proceedings are excluded from this pilot program.

2) The application must contain three or fewer independent claims and twenty or fewer total claims. The application must not contain any multiple dependent claims. For an application that contains more than three independent claims or twenty total claims, or multiple dependent claims, applicant must file a preliminary amendment in compliance with 37 CFR 1.121 to cancel the excess claims and/or the multiple dependent claims at the time the petition to make special is filed.

3) The claims must be directed to a single invention that materially enhances the quality of the environment, or that materially contributes to: (1) the discovery or development of renewable energy resources; (2) the more efficient utilization and conservation of energy resources; or (3) green house gas emission reduction (see the eligibility requirements of sections II and III of the notice (i) cited above). The petition must include a statement that, if the USPTO determines that the claims are directed to multiple inventions (e.g., in a restriction requirement), applicant will agree to make an election without traverse in a telephonic interview, and elect an invention that meets the eligibility requirements in section II or III of the notice (i) cited above.

4) The petition to make special must be timely filed electronically using the USPTO electronic filing system, EFS-Web, and selecting the document description of "Petition for Green Tech Pilot" on the EFS-Web screen. Applicant should use form PTO/SB/420, which is available as a Portable Document Format (PDF) fillable form in EFS-Web and on the USPTO Web site.

5) The petition to make special must be filed at least one day prior to the date that a first Office action (which may be an Office action containing only a restriction requirement) appears in the Patent Application Information Retrieval (PAIR) system. Applicant may check the status of the application using PAIR.

6) The petition to make special must be accompanied by a request for early publication in compliance with 37 CFR 1.219 and the publication fee set forth in 37 CFR 1.18(d).

Privacy Act Statement

The **Privacy Act of 1974 (P.L. 93-579)** requires that you be given certain information in connection with your submission of the attached form related to a patent application or patent. Accordingly, pursuant to the requirements of the Act, please be advised that: (1) the general authority for the collection of this information is 35 U.S.C. 2(b)(2); (2) furnishing of the information solicited is voluntary; and (3) the principal purpose for which the information is used by the U.S. Patent and Trademark Office is to process and/or examine your submission related to a patent application or patent. If you do not furnish the requested information, the U.S. Patent and Trademark Office may not be able to process and/or examine your submission, which may result in termination of proceedings or abandonment of the application or expiration of the patent.

The information provided by you in this form will be subject to the following routine uses:

1. The information on this form will be treated confidentially to the extent allowed under the Freedom of Information Act (5 U.S.C. 552) and the Privacy Act (5 U.S.C 552a). Records from this system of records may be disclosed to the Department of Justice to determine whether disclosure of these records is required by the Freedom of Information Act.
2. A record from this system of records may be disclosed, as a routine use, in the course of presenting evidence to a court, magistrate, or administrative tribunal, including disclosures to opposing counsel in the course of settlement negotiations.
3. A record in this system of records may be disclosed, as a routine use, to a Member of Congress submitting a request involving an individual, to whom the record pertains, when the individual has requested assistance from the Member with respect to the subject matter of the record.
4. A record in this system of records may be disclosed, as a routine use, to a contractor of the Agency having need for the information in order to perform a contract. Recipients of information shall be required to comply with the requirements of the Privacy Act of 1974, as amended, pursuant to 5 U.S.C. 552a(m).
5. A record related to an International Application filed under the Patent Cooperation Treaty in this system of records may be disclosed, as a routine use, to the International Bureau of the World Intellectual Property Organization, pursuant to the Patent Cooperation Treaty.
6. A record in this system of records may be disclosed, as a routine use, to another federal agency for purposes of National Security review (35 U.S.C. 181) and for review pursuant to the Atomic Energy Act (42 U.S.C. 218(c)).
7. A record from this system of records may be disclosed, as a routine use, to the Administrator, General Services, or his/her designee, during an inspection of records conducted by GSA as part of that agency's responsibility to recommend improvements in records management practices and programs, under authority of 44 U.S.C. 2904 and 2906. Such disclosure shall be made in accordance with the GSA regulations governing inspection of records for this purpose, and any other relevant (*i.e.*, GSA or Commerce) directive. Such disclosure shall not be used to make determinations about individuals.
8. A record from this system of records may be disclosed, as a routine use, to the public after either publication of the application pursuant to 35 U.S.C. 122(b) or issuance of a patent pursuant to 35 U.S.C. 151. Further, a record may be disclosed, subject to the limitations of 37 CFR 1.14, as a routine use, to the public if the record was filed in an application which became abandoned or in which the proceedings were terminated and which application is referenced by either a published application, an application open to public inspection or an issued patent.
9. A record from this system of records may be disclosed, as a routine use, to a Federal, State, or local law enforcement agency, if the USPTO becomes aware of a violation or potential violation of law or regulation.

UNITED STATES PATENT AND TRADEMARK OFFICE

UNITED STATES DEPARTMENT OF COMMERCE
United States Patent and Trademark Office
Address: COMMISSIONER FOR PATENTS
P.O. Box 1450
Alexandria, Virginia 22313-1450
www.uspto.gov

APPLICATION NO.	FILING DATE	FIRST NAMED INVENTOR	ATTORNEY DOCKET NO.	CONFIRMATION NO.
13/176,452	07/05/2011	Jun URANO	GEVO-041/11US 310142-2231	4626

58249 7590 08/29/2011

COOLEY LLP
ATTN: Patent Group
Suite 1100
777 - 6th Street, NW
WASHINGTON, DC 20001

EXAMINER	
ART UNIT	PAPER NUMBER
1652	

MAIL DATE	DELIVERY MODE
08/29/2011	PAPER

Please find below and/or attached an Office communication concerning this application or proceeding.

The time period for reply, if any, is set in the attached communication.

UNITED STATES PATENT AND TRADEMARK OFFICE

Commissioner for Patents
United States Patent and Trademark Office
P.O. Box 1450
Alexandria, VA 22313-1450
www.uspto.gov

AUG 2 9 2011

COOLEY LLP
ATTN: Patent Group
Suite 1100
777 - 6th Street, NW
WASHINGTON DC 20001

In re Application of :

URANO, Jun *et al.*	:	DECISION ON PETITION
Application No. 13/176452	:	TO MAKE SPECIAL UNDER
Filed: July 5, 2011	:	THE GREEN TECHNOLOGY
Attorney Docket No. GEVO-041/11US 310142-2231	:	PILOT PROGRAM

This is a decision on the petition under 37 CFR 1.102, filed July 5, 2011, to make the above-identified application special under the pilot program for applications pertaining to Green Technologies as set forth in 74 Federal Register Notice 64666 (December 8, 2009) and amended by 75 Federal Register Notice 28554 (May 21, 2010) and 75 Federal Register Notice 69049 (November 10, 2010).

The petition is **GRANTED**.

A grantable petition to make an application special under 37 CFR 1.102 and the pilot program as set forth in 74 FR 64666 must be directed to a nonprovisional application filed under 35 USC 111(a) or be a national stage entry under 35 USC 371, exclusive of any reissue applications.

In order to qualify for special status, the following requirements must be met. 1) The application must have no more than 3 independent claims and no more than 20 total claims. 2) The application must not contain any multiple dependent claims. 3) The petition must state the basis for seeking special status, i.e., the claimed invention either: A) materially enhances the quality of the environment or B) materially contributes to: i) the discovery or development of renewable energy resources, ii) the more efficient utilization and conservation of energy resources, or iii) greenhouse gas emission reduction. 4) If the disclosure is not clear on its face that the claimed invention materially contributes under category (A) or (B), the petition must be accompanied by a statement by the applicant, assignee, or an attorney/agent registered to practice before the Office explaining how the materiality standard is met. 5) A statement that applicant will agree to make an election without traverse in a telephonic interview if a restriction requirement is made by the examiner. 6) The petition to make special must be filed electronically. 7) The petition must be filed at least one day prior to the date that a first Office Action appears in the Patent Application Information Retrieval (PAIR) system. 8) The petition must be accompanied by a

request for early publication in compliance with 37 CFR 1.219 and include the publication fee as set forth in 37 CFR 1.18(d).

The requirement for a fee for consideration of the petition to make special for applications pertaining to Green Technologies has been waived.

The instant petition complies with items 1 – 8 above. Accordingly, the above-identified application has been accorded "special" status.

Telephone inquires concerning this decision should be directed to Manjunath Rao at 571-272-0939.

The application is being forwarded to the Technology Center Art Unit 1652 for action on the merits commensurate with this decision.

/Manjunath Rao/

Manjunath Rao
Supervisory Patent Examiner &
POC for TC 1600 Green Tech Petitions
Technology Center 1600

UNITED STATES PATENT AND TRADEMARK OFFICE

Commissioner for Patents
United States Patent and Trademark Office
P.O. Box 1450
Alexandria, VA 22313-1450
www.uspto.gov

WORKMAN NYDEGGER/MICROSOFT
1000 EAGLE GATE TOWER
60 EAST SOUTH TEMPLE
SALT LAKE CITY UT 84111

MAILED
AUG 24 2011
OFFICE OF PETITIONS

In re Application of	:	
Stephen Jared MAINE et al.	:	DECISION GRANTING STATUS
Application No. 13/176,477	:	UNDER 37 CFR 1.47(a)
Filed: July 05, 2011	:	
Attorney Docket No. 13768.980.1	:	

This is in response to the petition under 37 CFR 1.47(a), filed July 05, 2011.

The petition is **GRANTED.**

Petitioner has shown that the non-signing inventor cannot be located to join in the filing of the above-identified application.

The application and papers have been reviewed and found in compliance with 37 CFR 1.47(a). This application is hereby accorded Rule 1.47(a) status.

As provided in 37 CFR 1.47(c), this Office will forward notice of this application's filing to the non-signing inventor at the address given in the petition. Notice of the filing of this application will also be published in the Official Gazette.

Telephone inquiries regarding this decision should be directed to Michelle R. Eason at (571) 272-4231.

This application is being referred to Technology Center Art Unit 2157.

Thurman K. Page
Petitions Examiner
Office of Petitions

UNITED STATES PATENT AND TRADEMARK OFFICE

Commissioner for Patents
United States Patent and Trademark Office
P.O. Box 1450
Alexandria, VA 22313-1450
www.uspto.gov

TIRUNELVELI R. VISHWANATH
3665 BENTON STREET, APT. 116
SANTA CLARA, CA 95051

MAILED
AUG 24 2011
OFFICE OF PETITIONS

In re Application of
Stephen Jared MAINE et al.
Application No. 13/176,477
Filed: July 05, 2011

LETTER

Dear Mr. Tirunelvei R. Vishwanath:

You are named as a joint inventor in the above-identified United States patent application, filed under the provisions of 35 U.S.C. 116 (United States Code), and 37 CFR 1.47(a), Rules of Practice in Patent Cases. Should a patent be granted on the application you will be designated therein as a joint inventor.

As a named inventor you are entitled to inspect any paper in the file wrapper of the application, order copies of all or any part thereof (at a prepaid cost per 37 CFR 1.19) or make your position of record in the application. Alternatively, you may arrange to do any of the preceding through a registered patent attorney or agent presenting written authorization from you. If you care to join the application, counsel of record (see below) would presumably assist you. Joining the application would entail the filing of an appropriate oath or declaration by you pursuant to 37 CFR 1.63.

Telephone inquiries regarding this communication should be directed to Michelle R. Eason at (571) 272-4231. Requests for information regarding your application should be directed to the File Information Unit at (703) 308-2733. Information regarding how to pay for and order a copy of the application, or a specific paper in the application, should be directed to the Certification Division at (571) 272-3150 or 1 (800) 972-6382 (outside the Washington, DC area).

Thurman K. Page
Petitions Examiner
Office of Petitions

UNITED STATES PATENT AND TRADEMARK OFFICE

Commissioner for Patents
United States Patent and Trademark Office
P.O. Box 1450
Alexandria, VA 22313-1450
www.uspto.gov

KENSEY NASH CORPORATION
735 PENNSYLVANIA DRIVE
EXTON PA 19341

MAILED

AUG 29 2011

OFFICE OF PETITIONS

In re Application of :
John E. Nash et al. :
Application No. 13/176,496 : DECISION ON PETITION
Filed: July 5, 2011 : TO MAKE SPECIAL UNDER
Attorney Docket No. P0095.2 : 37 CFR 1.102(c)(1)
:

This is a decision on the petition under 37 CFR 1.102(c)(1), filed August 9, 2011, to make the above-identified application special based on applicant's age as set forth in MPEP § 708.02, Section IV.

The petition is **GRANTED**.

A grantable petition to make an application special under 37 CFR 1.102(c)(1) and MPEP § 708.02, Section IV: Applicant's Age must be accompanied by evidence showing that at least one of the applicants is 65 years of age, or more, such as a birth certificate or a statement by applicant. No fee is required

The instant petition includes a statement by a registered attorney. Accordingly, the above-identified application has been accorded "special" status.

Telephone inquiries concerning this decision should be directed to JoAnne Burke at 571-272-4584.

All other inquiries concerning either the examination or status of the application should be directed to the Technology Center.

The application is being forwarded to the Technology Center Art Unit 3763 for action on the merits commensurate with this decision.

/JoAnne Burke/
JoAnne Burke
Petitions Examiner
Office of Petitions

Doc Code: PET.GREEN
Document Description: Petition for Green Tech Pilot

PTO/SB/420 (11-10)
Approved for use through 01/31/2011. OMB 0651-0062
U.S. Patent and Trademark Office; U. S. DEPARTMENT OF COMMERCE
Under the Paperwork Reduction Act of 1995, no persons are required to respond to a collection of information unless it displays a valid OMB control number.

PETITION TO MAKE SPECIAL UNDER THE GREEN TECHNOLOGY PILOT PROGRAM

Attorney Docket Number: 83192356	Application Number (if known): 13/176,556	Filing date: July 5, 2011
First Named Inventor: Gopichandra Surnilla		
Title: EXHAUST GAS RECIRCULATION (EGR) SYSTEM		

APPLICANT HEREBY REQUESTS TO PARTICIPATE IN THE GREEN TECHNOLOGY PILOT PROGRAM FOR THE ABOVE-IDENTIFIED APPLICATION. **See Instruction Sheet on page 2.**

This petition must be timely filed electronically using the USPTO electronic filing system, EFS-Web.

1. By filing this petition:

   Applicant is requesting early publication: Applicant hereby requests early publication under 37 CFR 1.219 and the publication fee set forth in 37 CFR 1.18(d) accompanies this request.

2. By filing this petition: applicant is agreeing to make an election without traverse in a telephonic interview and elect an invention that meets the eligibility requirements for the Green Technology Pilot Program, if the Office determines that the claims are not obviously directed to a single invention. See Instruction Sheet.

3. This request is accompanied by statements of special status for the eligibility requirement.

4. The application contains no more than three (3) independent claims and twenty (20) total claims.

5. The application does not contain any multiple dependent claims.

6. Other attachments: _____

Signature /John D. Russell/	Date July 26, 2011
Name (Print/Typed) John D. Russell	Registration Number 47,048

Note: *Signatures of all the inventors or assignees of record of the entire interest or their representative(s) are required in accordance with 37 CFR 1.33 and 11.18. Please see 37 CFR 1.4(d) for the form of the signature. If necessary, submit multiple forms for more than one signature see below*.*

[X] *Total of 1 forms are submitted.

The information is required to obtain or retain a benefit by the public which is to file (and by the USPTO to process) an application. Confidentiality is governed by 35 U.S.C. 122 and 37 CFR 1.11 and 1.14. This collection is estimated to take 12 hours to complete, including gathering, preparing, and submitting the completed application form to the USPTO. Time will vary depending upon the individual case. Any comments on the amount of time you require to complete this form and/or suggestions for reducing this burden, should be sent to the Chief Information Officer, U.S. Patent and Trademark Office, U.S. Department of Commerce, P.O. Box 1450, Alexandria, VA 22313-1450. DO NOT SEND FEES OR COMPLETED FORMS TO THIS ADDRESS. **SEND TO: Commissioner for Patents, P.O. Box 1450, Alexandria, VA 22313-1450.**

If you need assistance in completing the form, call 1-800-PTO-9199 and select option 2.

IN THE UNITED STATES PATENT AND TRADEMARK OFFICE

Applicants	:	Gopichandra Surnilla, et al.
Application No.	:	13/176,556
Filed	:	July 5, 2011
Title	:	EXHAUST GAS RECIRCULATION (EGR) SYSTEM
Group Art Unit	:	3748
Confirmation No.	:	4785
Docket No.	:	83192356

Commissioner for Patents
P.O. Box 1450
Alexandria, VA 22313-1450

CERTIFICATE OF TRANSMISSION

I hereby certify that this correspondence is being transmitted via the U.S. Patent and Trademark Office electronic filing system (EFS-Web) to the USPTO on:

July 26, 2011	/Angie C. Farr/
Date	Angie C. Farr

STATEMENTS OF SPECIAL STATUS

Applicants respectfully request consideration of the following statement concerning the basis for the special status as well as the following statement pertaining to the materiality standard.

I. Statement concerning the basis for special status.

Applicants submit that special status is sought on the following bases: (1) the claimed invention materially contributes to the more efficient utilization and conservation of energy resources; and/or (2) the claimed invention materially contributes to greenhouse gas emission reduction; and/or (3) the claimed invention materially enhances the quality of the environment.

II. Statement pertaining to the materiality standard.

As a preliminary matter, Applicants note that the following statement refers explicitly to the elements of independent claim 1, which is the broadest claim in many respects.

Regarding basis (1), Applicants submit that the claimed invention materially contributes to the more efficient utilization and conservation of energy resources by

improving fuel economy (*i.e.*, more efficiently utilizing and conserving fossil fuels). Specifically, the claimed invention improves accuracy of delivering a desired EGR rate, which improves fuel economy. As explained in the Background and Summary of the subject application, exhaust gas recirculation (EGR) routes a portion of the exhaust gasses back to the intake to be used in combustion. This reduces throttle losses and heat rejection, improving the efficiency of the engine. In a turbocharged engine, EGR systems may include a low pressure exhaust gas recirculation (LP-EGR) system, a high pressure exhaust gas recirculation (HP-EGR) system, or both a LP-EGR and a HP-EGR system, for example. The amount of EGR routed through the EGR system is measured and adjusted during engine operation to maintain desirable combustion stability of the engine. One solution for measuring the amount of EGR in the LP-EGR system is for the LP-EGR system to include a mass air flow (MAF) sensor downstream of the hot, moist, exhaust gasses and upstream of the turbocharger compressor. However, the MAF sensor may be exposed to high exhaust temperatures, high concentrations of soot and exhaust hydrocarbons, water condensation, and exhaust pulsations. These conditions may reduce the lifetime of the MAF sensor and reduce its accuracy when measuring the EGR rate. Errors in the measured EGR rate can lead to undesired amounts of EGR being delivered to the intake, and the efficiency gained by using EGR may not be maximized.

The claimed invention addresses this issue by providing a method whereby the amount of EGR in the LP-EGR system may be resolved by measuring flows at multiple other, cooler and drier locations of the engine intake (e.g., before and after EGR introduction), where the gasses include lower concentrations of soot and exhaust hydrocarbons, and the gasses are less affected by exhaust pulsations. For example, claim 1 recites:

> An engine control method, comprising:
>
> delivering low-pressure exhaust gas recirculation (EGR) to downstream of an intake throttle and upstream of a turbocharger compressor; and
>
> adjusting an operating parameter based on EGR mass flow identified from a difference between a measured clean air mass flow entering the intake throttle and a total mass flow measured downstream from the turbocharger compressor.

In this manner, the EGR rate may be measured and maintained at a desirable level while a MAF sensor may be exposed to lower temperatures, lower concentrations of soot and exhaust hydrocarbons, less water condensation, and fewer exhaust pulsations. Thus, the MAF sensor may potentially have a longer lifetime and greater accuracy. By maintaining EGR at a desired level, engine efficiency may be improved, thus improving fuel economy.

Regarding basis (2), Applicants submit that the claimed invention materially contributes to greenhouse gas emission reduction as follows. CO_2 is a greenhouse gas produced during fossil fuel combustion. As explained above and set forth in claim 1, the claimed invention improves fuel economy by maintaining EGR delivery at a desired rate, thus lowering CO_2 emissions.

Regarding basis (3), Applicants submit that the claimed invention materially enhances the quality of the environment by reducing vehicle emissions such as NOx, which negatively impact the quality of the environment. EGR lowers peak combustion temperatures, which reduces the production of NOx. As set forth in claim 1, the claimed invention maintains EGR at a desired rate more accurately, thus lowering NOx emissions and enhancing the quality of the environment.

Please charge any cost incurred in this filing, along with any other costs, to Deposit Account No. 06-1510.

Respectfully submitted,

ALLEMAN HALL MCCOY RUSSELL & TUTTLE LLP

/John D. Russell/
John D. Russell
Registration No. 47,048
Customer No. 36865
Attorney/Agent for Applicants/Assignee
806 S.W. Broadway, Suite 600
Portland, Oregon 97205
Telephone: (503) 459-4141
Facsimile: (503) 459-4142

UNITED STATES PATENT AND TRADEMARK OFFICE

UNITED STATES DEPARTMENT OF COMMERCE
United States Patent and Trademark Office
Address: COMMISSIONER FOR PATENTS
P.O. Box 1450
Alexandria, Virginia 22313-1450
www.uspto.gov

APPLICATION NO.	FILING DATE	FIRST NAMED INVENTOR	ATTORNEY DOCKET NO.	CONFIRMATION NO.
13/176,556	07/05/2011	Gopichandra Surnilla	83192356	4785

36865 7590 08/11/2011

ALLEMAN HALL MCCOY RUSSELL & TUTTLE, LLP
806 S.W. BROADWAY, SUITE 600
PORTLAND, OR 97205

EXAMINER	
ART UNIT	PAPER NUMBER
3748	

MAIL DATE	DELIVERY MODE
08/11/2011	PAPER

Please find below and/or attached an Office communication concerning this application or proceeding.

The time period for reply, if any, is set in the attached communication.

UNITED STATES PATENT AND TRADEMARK OFFICE

Commissioner for Patents
United States Patent and Trademark Office
P.O. Box 1450
Alexandria, VA 22313-1450
www.uspto.gov

ALLEMAN HALL MCCOY RUSSELL & TUTTLE, LLP
806 S.W. BROADWAY, SUITE 600
PORTLAND OR 97205

In re Application of	:	
SURNILLA, GOPICHANDRA . et al	:	DECISION ON PETITION
Application No. 13/176,556	:	TO MAKE SPECIAL UNDER
Filed: July 05, 2011	:	THE GREEN TECHNOLOGY
Attorney Docket No. 83192356	:	PILOT PROGRAM

This is a decision on the renewed petition under 37 CFR 1.102, filed July 26, 2011 to make the above-identified application special under the pilot program for applications pertaining to Green Technologies as set forth in 74 Federal Register Notice 64666 (December 8, 2009) and amended by 75 Federal Register Notice 28554 (May 21, 2010) and 75 Federal Register Notice 69049 (November 10, 2010).

The petition is **granted.**

A grantable petition to make an application special under 37 CFR 1.102 and the pilot program as set forth in 74 FR 64666 must be directed to a nonprovisional application filed under 35 USC 111(a) or be a national stage entry under 35 USC 371, exclusive of any reissue applications.

In order to qualify for special status, the following requirements must be met. 1) The application must have no more than 3 independent claims and no more than 20 total claims. 2) The application must not contain any multiple dependent claims. 3) The petition must state the basis for seeking special status, i.e., the claimed invention either: A) materially enhances the quality of the environment or B) materially contributes to: i) the discovery or development of renewable energy resources, ii) the more efficient utilization and conservation of energy resources, or iii) greenhouse gas emission reduction. 4) If the disclosure is not clear on its face that the claimed invention materially contributes under category (A) or (B), the petition must be accompanied by a statement by the applicant, assignee, or an attorney/agent registered to practice before the Office explaining how the materiality standard is met. 5) A statement that applicant will agree to make an election without traverse in a telephonic interview if a restriction requirement is made by the examiner. 6) The petition to make special must be filed electronically. 7) The petition must be filed at least one day prior to the date that a first Office Action appears in the Patent Application Information Retrieval (PAIR) system. 8) The petition must be accompanied by a request for early publication in compliance with 37 CFR 1.219 and include the publication fee as set forth in 37 CFR 1.18(d).

The requirement for a fee for consideration of the petition to make special for applications pertaining to Green Technologies has been waived.

The instant petition complies with items 1 – 8 above. Accordingly, the above-identified application has been accorded "special" status.

Telephone inquires concerning this decision should be directed to Henry C. Yuen at 571-272-4856.

This application will be forwarded to the Technology Center Art Unit 3748 for action on the merits commensurate with this decision.

/Henry C. Yuen/

Henry C. Yuen
Quality Assurance Specialist
Technology Center TC 3700

Doc Code: PPH.PCT.652
Document Description: Petition to make special under PCT-Patent Pros Hwy

PTO/SB/20PCT-US (09-10)
Approved for use through 01/31/2012. OMB 0651-0058
U.S. Patent and Trademark Office; U. S. DEPARTMENT OF COMMERCE
Under the Paperwork Reduction Act of 1995, no persons are required to respond to a collection of information unless it displays a valid OMB control number.

REQUEST FOR PARTICIPATION IN THE PATENT COOPERATION TREATY - PATENT PROSECUTION HIGHWAY (PCT-PPH) PILOT PROGRAM IN A U.S. APPLICATION WHERE THE USPTO WAS THE ISA OR IPEA

Application No:	13/176,628	Filing date:	July 5, 2011
First Named Inventor:	Yasunobu CHIBA, et al.		
Title of the Invention:	COMMUNICATION SYSTEM, NODE, CONTROL SERVER, COMMUNICATION METHOD AND PROGRAM		

THIS REQUEST FOR PARTICIPATION IN THE PCT-PPH PILOT PROGRAM ALONG WITH THE REQUIRED DOCUMENTS MUST BE SUBMITTED VIA EFS-WEB. INFORMATION REGARDING EFS-WEB IS AVAILABLE AT HTTP://WWW.USPTO.GOV/EBC/EFS_HELP.HTML

APPLICANT HEREBY REQUESTS PARTICIPATION IN THE PCT-PPH PROGRAM AND PETITIONS TO MAKE THE ABOVE-IDENTIFIED APPLICATION SPECIAL UNDER THE PCT-PPH PROGRAM.

The above-identified application is (1) a national stage entry of the corresponding PCT application, or (2) a national stage entry of another PCT application which claims priority to the corresponding PCT application, or (3) a national application that claims domestic/ foreign priority to the corresponding PCT application, or (4) a national application which forms the basis for the priority claim in the corresponding PCT application, or (5) a continuing application of a U.S. application that satisfies one of (1) to (4) above, or (6) a U.S. application that claims domestic benefit to a U.S. provisional application which forms the basis for the priority claim in the corresponding PCT application.

The corresponding PCT application number(s) is/are: PCT/JP2009/066026

The international date of the corresponding PCT application(s) is/are: September 14, 2009

I. List of Required Documents:

a. **A copy of the latest international work product (WO/ISA, WO/IPEA, or IPER) in the above–identified corresponding PCT application(s)**

[ ] Is attached

[X] Is not attached because the document is already in the U.S. application.

b. **A copy of all claims which were indicated as having novelty, inventive step and industrial applicability in the above-identified corresponding PCT application(s).**

[X] Is attached.

[ ] Is not attached because the document is already in the U.S. application.

c. **English translations of the documents in a. and b. above are attached (if the documents are not in the English language). A statement that the English translation is accurate is attached for the document in b. above.**

This collection of information is required by 35 U.S.C. 119, 37 CFR 1.55, and 37 CFR 1.102(d). The information is required to obtain or retain a benefit by the public, which is to file (and by the USPTO to process) an application. Confidentiality is governed by 35 U.S.C. 122 and 37 CFR 1.11 and 1.14. This collection is estimated to take 2 hours to complete, including gathering, preparing, and submitting the completed application form to the USPTO. Time will vary depending upon the individual case. Any comments on the amount of time you require to complete this form and/or suggestions for reducing this burden should be sent to the Chief Information Officer, U.S. Patent and Trademark Office, U.S. Department of Commerce, P.O. Box 1450, Alexandria, VA 22313-1450. DO NOT SEND FEES OR COMPLETED FORMS TO THIS ADDRESS.

PTO/SB/20PCT-US (09-10)
Approved for use through 01/31/2012. OMB 0651-0058
U.S.Patent and Trademark Office; U.S. DEPARTMENT OF COMMERCE
Under the Paperwork Reduction Act of 1995, no persons are required to respond to a collection of information unless it displays a valid OMB control number.

REQUEST FOR PARTICIPATION IN THE PCT-PPH PILOT PROGRAM IN A U.S. APPLICATION WHERE THE USPTO WAS THE ISA OR IPEA (continued)

Application No.:	13/176,628
First Named Inventor:	Yasunobu CHIBA, et al.

d. **(1) An information disclosure statement listing the documents cited in the international work products (ISR, WO/ISA, WO/IPEA, IPER) of the corresponding PCT application.**

☐ Is attached

☒ Has already been filed in the above-identified U.S. application on July 5, 2011

(2) Copies of all documents (except) for U.S. patents or U.S. patent application publications)

☐ Are attached.

☒ Have already been filed in the above-identified U.S. application on July 5, 2011

II. Claims Correspondence Table:

Claims in US Application	Patentable Claims in the corresponding PCT Application	Explanation regarding the correspondence
Please See Attached List		

III. All the claims in the US application sufficiently correspond to the patentable claims in the corresponding PCT application.

Signature	Date August 6, 2011
Name (Print/Typed) Sean M. McGinn, Esq.	Registration Number 34,386

PCT/JP2009/066026
Your ref.: KATO.322
Our Ref.: NEG-1298PCT
-US

Claims Correspondence List

International Application Total claims:33	US Total claims:33
*1	*1
2(1)	2(1)
3(1-2)	3(1)
4(1-3)	4(1)
5(4)	5(4)
6(4)	6(4)
7(4-6)	7(4)
8(7)	8(7)
9(8)	9(8)
10(7-9)	10(7)
11(1-10)	11(1)
12(1-11)	12(1)
13(1-12)	13(1)
14(1-12)	14(1)
*15	*15
16(15)	16(15)
17(15-16)	17(15)
18(15-17)	18(15)
19(18)	19(18)
20(19)	20(19)
21(20)	21(20)
22(15-21)	22(15)
23(15-22)	23(15)
*24	*24
25(24)	25(24)
26(24-25)	26(24)
27(24-26)	27(24)
28(24-27)	28(24)
29(24-28)	29(24)
30(24-28)	30(24)
*31	*31
*32	*32
*33	*33

UNITED STATES PATENT AND TRADEMARK OFFICE

UNITED STATES DEPARTMENT OF COMMERCE
United States Patent and Trademark Office
Address: COMMISSIONER FOR PATENTS
P.O. Box 1450
Alexandria, Virginia 22313-1450
www.uspto.gov

APPLICATION NO.	FILING DATE	FIRST NAMED INVENTOR	ATTORNEY DOCKET NO.	CONFIRMATION NO.
13/176,628	07/05/2011	Yasunobu Chiba	NEG-1298PCT-US	4909

21254 7590 09/16/2011

MCGINN INTELLECTUAL PROPERTY LAW GROUP, PLLC
8321 OLD COURTHOUSE ROAD
SUITE 200
VIENNA, VA 22182-3817

EXAMINER	
ART UNIT	PAPER NUMBER
2465	

MAIL DATE	DELIVERY MODE
09/16/2011	PAPER

Please find below and/or attached an Office communication concerning this application or proceeding.

The time period for reply, if any, is set in the attached communication.

UNITED STATES PATENT AND TRADEMARK OFFICE

MAILED

SEP 16 2011

DIRECTOR OFFICE
TECHNOLOGY CENTER 2400

Commissioner for Patents
United States Patent and Trademark Office
P.O. Box 1450
Alexandria, VA 22313-1450
www.uspto.gov

MCGINN INTELLECTUAL PROPERTY
LAW GROUP, PLLC
8321 OLD COURTHOUSE ROAD
SUITE 200
VIENNA VA 22182-3817

In re Application of: CHIBA et al.
Application No. **13/176,628**
Filed: July 05, 2011
For: COMMUNICATION SYSTEM, NODE, CONTROL SERVER, COMMUNICATION METHOD AND PROGRAM

DECISION ON REQUEST TO PARTICIPATE IN PCT-PATENT PROSECUTION HIGHWAY PROGRAM AND PETITION TO MAKE SPECIAL UNDER 37 CFR §1.102(a)

This is a decision on the request to participate in the PCT- Patent Prosecution Highway (PPH) pilot program and the petition under 37 CFR §1.102(a), filed **August 06, 2011**, to make the above-identified application special.

The petition is **GRANTED.**

A grantable request to participate in the PCT PPH program and petition to make special require:

(1) The relationship between the corresponding U.S. application for which participation in the PCT-PPH pilot program is requested and the PCT application satisfies one of the following:

(a) The U.S. application is a national stage entry of the corresponding PCT application.

(b)The U.S. application is a national application which forms the basis for the priority claim in the corresponding PCT application.

(c) The U.S. application is a national stage entry of another PCT application (which can be filed in any competent receiving office) which claims priority to the corresponding PCT application.

(d) The U.S. application is a national application claiming foreign/domestic priority to the corresponding PCT application.

(e) The U.S. application is a continuing application (continuation, divisional, or continuation-in-part) of the U.S. application which satisfies one of the above (a) to (d) scenarios.

(2) The latest work product in the international phase of the PCT application corresponding to the U.S. application indicates at least one claim in the PCT application has novelty, inventive step and industrial applicability. In case any observation is described in Box VIII of the WO/ISA, or WO/IPEA, or IPER which forms the basis for the PCT-PPH request, applicant must identify and explain why the claim(s) is/are not subject to any observation described in Box VIII irrespective of whether an amendment is submitted to correct the observation described in Box VIII.

(3) All the claims in each U.S. application for which a request for participation in the PCT-PPH pilot program is made must sufficiently correspond to one or more of those claims indicated as having novelty, inventive step and industrial applicability and free of any observation described in Box VIII in the latest work product of the corresponding PCT application.

(4) Substantive examination of the U.S. application for which participation in the PCT-PPH pilot program is requested has not begun.

(5) Applicant must submit a copy of the latest international work product which indicated that the claim(s) has/have novelty, inventive step and industrial applicability along with an English translation thereof if the copy of the latest international work product is not in the English language.

(6) Applicant must submit a copy of the claims from the corresponding PCT application which were indicated as having novelty, inventive step and industrial applicability in the latest work product of the PCT application along with an English translation thereof and a statement that the English translation is accurate if the claims are not in the English language. Applicant is required to submit a claims correspondence table in English.

The claims correspondence table must indicate how all the claims in the U.S. application sufficiently correspond to the claims indicated as having novelty, inventive step and industrial applicability in the latest international work product. If the claims in the U.S. application for which participation in the PCT-PPH pilot program is requested are identical to the claims from the corresponding PCT application, and are in the English language, applicant may just indicate such in the PCT-PPH request and it will not be necessary for applicant to submit a copy of the claims from the corresponding PCT application.

(7) Applicant must submit an information disclosure statement (IDS) listing the documents cited in the international work products (ISR, WOIISA, WOIIPEA, PER) of the PCT.

(8) The request for participation in the PCT-PPH pilot program and all the supporting documents must be submitted to the USPTO via EFS-Web and indexed with the following document description: "Petition to make special under PCT-Patent Pros Hwy. Any preliminary amendments and IDS submitted with the PCT-PPH documents must be separately indexed as a preliminary amendment and IDS, respectively.

The request to participate in the PCT-PPH program and petition comply with all the above requirements.

Accordingly, the above-identified application has been accorded **"special"** status.

The application is undergoing pre-examination processing (as of 09/15/11).

Once it is released for examination, the application will be forwarded to the examiner for action on the merits commensurate with this decision.

Telephone inquiries concerning this decision should be directed to Beatriz Prieto at 571-272-3902. As a second point of contact Hassan Kizou at (571) 272-3088. All other inquiries concerning the examination or status of the application is accessible in the PAIR system at http://www.uspto.gov/ebc/index.html.

/Beatriz Prieto/

Beatriż Prieto
Quality Assurance Specialist
Technology Center 2400

Doc Code: PET.GREEN
Document Description: Petition for Green Tech Pilot

PTO/SB/420 (05-10)
Approved for use through 05/31/2010. OMB 0651-0062
U.S. Patent and Trademark Office; U. S. DEPARTMENT OF COMMERCE
Under the Paperwork Reduction Act of 1995, no persons are required to respond to a collection of information unless it displays a valid OMB control number.

PETITION TO MAKE SPECIAL UNDER THE GREEN TECHNOLOGY PILOT PROGRAM

Attorney Docket Number: 1630-0942PUS1	Application Number (if known):	Filing date: JUL 05 2011
First Named Inventor: Sungeun LEE		
Title: THIN FILM SOLAR CELL AND METHOD OF MANUFACTURING THE SAME		

APPLICANT HEREBY REQUESTS TO PARTICIPATE IN THE GREEN TECHNOLOGY PILOT PROGRAM FOR THE ABOVE-IDENTIFIED APPLICATION. See Instruction Sheet on page 2.

This petition must be timely filed electronically using the USPTO electronic filing system, EFS-Web.

1. By filing this petition:

   Applicant is requesting early publication: Applicant hereby requests early publication under 37 CFR 1.219 and the publication fee set forth in 37 CFR 1.18(d) accompanies this request.

2. By filing this petition: applicant is agreeing to make an election without traverse in a telephonic interview and elect an invention that meets the eligibility requirements set forth in the notice titled "Pilot Program for Green Technologies Including Greenhouse Gas Reduction," as modified by the notice titled "Elimination of Classification Requirement in the Green Technology Pilot Program," each of which was published in the Federal Register, if the Office determines that the claims are not obviously directed to a single invention.

3. This request is accompanied by statements of special status for the eligibility requirement.

4. The application contains no more than three (3) independent claims and twenty (20) total claims.

5. The application does not contain any multiple dependent claims.

6. Other attachments: _____

Signature	Date JUL 05 2011
Name (Print/Typed) Esther H. Chong	Registration Number 40953

Note: *Signatures of all the inventors or assignees of record of the entire interest or their representative(s) are required in accordance with 37 CFR 1.33 and 11.18. Please see 37 CFR 1.4(d) for the form of the signature. If necessary, submit multiple forms for more than one signature, see below*.*

☐ *Total of _____ forms are submitted.

The information is required to obtain or retain a benefit by the public which is to file (and by the USPTO to process) an application. Confidentiality is governed by 35 U.S.C. 122 and 37 CFR 1.11 and 1.14. This collection is estimated to take 12 hours to complete, including gathering, preparing, and submitting the completed application form to the USPTO. Time will vary depending upon the individual case. Any comments on the amount of time you require to complete this form and/or suggestions for reducing this burden, should be sent to the Chief Information Officer, U.S. Patent and Trademark Office, U.S. Department of Commerce, P.O. Box 1450, Alexandria, VA 22313-1450. DO NOT SEND FEES OR COMPLETED FORMS TO THIS ADDRESS. **SEND TO: Commissioner for Patents, P.O. Box 1450, Alexandria, VA 22313-1450.**

If you need assistance in completing the form, call 1-800-PTO-9199 and select option 2.

Docket No.: 1630-0942PUS1
(Patent)

IN THE UNITED STATES PATENT AND TRADEMARK OFFICE

Patent Application of:	Sungeun LEE et al.		
Application No.:	NEW	Confirmation No.:	
Filed:	JUL 05 2011	Art Unit:	Not Yet Assigned
For:	THIN FILM SOLAR CELL AND METHOD OF MANUFACTURING THE SAME	Examiner:	Not Yet Assigned

STATEMENT OF SPECIAL STATUS FOR THE ELIGIBILITY REQUIREMENT UNDER THE GREEN TECHNOLOGY PILOT PROGRAM

Commissioner for Patents
P.O. Box 1450
Alexandria, VA 22313-1450

Sir:

In support of the Petition to Make Special Under the Green Technology Pilot Program, it is respectfully submitted that the basis for the requested special status is that the invention claimed in the above-identified patent application materially contributes to the development of renewable energy sources and/or green house gas emission reduction. Specifically, the claimed invention relates to a solar cell.

Additionally, by filing this petition, the applicant agrees to make an election without traverse in a telephone interview and elect an invention that meets the eligibility requirements set for in the notice titled "Pilot Program for Green Technologies Including Greenhouse Gas Reduction," as modified by the notice titled "Elimination of Classification Requirement in the Green Technology Pilot Program," each of which was published in the Federal Register, if the Office determines that the claims are not obviously directed to a single invention.

It is also submitted that this application meets the eligibility requirements to participate in the Green Technology Pilot Program, as listed in the attached Petition to Make Special Under the Green Technology Pilot Program.

Accordingly, it is respectfully requested that the Petition be granted.

Should there be any outstanding matters that need to be resolved in the present application, the Examiner is respectfully requested to contact Seth S. Kim, Reg. No. 54,577, at the telephone number of the undersigned below to conduct an interview in an effort to expedite prosecution in connection with the present application.

If necessary, the Director is hereby authorized in this, concurrent, and future replies to charge any fees required during the pendency of the above-identified application or credit any overpayment to Deposit Account No. 02-2448.

Dated: JUL 05 2011

Respectfully submitted,

By _____

Esther H. Chong
Registration No.: 40953
BIRCH, STEWART, KOLASCH & BIRCH, LLP
8110 Gatehouse Road, Suite 100 East
P.O. Box 747
Falls Church, VA 22040-0747
703-205-8000

UNITED STATES PATENT AND TRADEMARK OFFICE

UNITED STATES DEPARTMENT OF COMMERCE
United States Patent and Trademark Office
Address: COMMISSIONER FOR PATENTS
P.O. Box 1450
Alexandria, Virginia 22313-1450
www.uspto.gov

APPLICATION NO.	FILING DATE	FIRST NAMED INVENTOR	ATTORNEY DOCKET NO.	CONFIRMATION NO.
13/176,662	07/05/2011	Sungeun LEE	1630-0942PUS1	4961

2292 7590 08/01/2011
BIRCH STEWART KOLASCH & BIRCH
PO BOX 747
FALLS CHURCH, VA 22040-0747

EXAMINER	
ART UNIT	PAPER NUMBER
2811	

NOTIFICATION DATE	DELIVERY MODE
08/01/2011	ELECTRONIC

Please find below and/or attached an Office communication concerning this application or proceeding.

The time period for reply, if any, is set in the attached communication.

Notice of the Office communication was sent electronically on above-indicated "Notification Date" to the following e-mail address(es):

mailroom@bskb.com

UNITED STATES PATENT AND TRADEMARK OFFICE

Commissioner for Patents
United States Patent and Trademark Office
P.O. Box 1450
Alexandria, VA 22313-1450
www.uspto.gov

BIRCH STEWART KOLASCH & BIRCH
PO BOX 747
FALLS CHURCH VA 22040-0747

In re Application of	:	
LEE et al.	:	DECISION ON PETITION
Application No. 13/176662	:	TO MAKE SPECIAL UNDER
Filed: July 5, 2011	:	THE GREEN TECHNOLOGY
Attorney Docket No. 1630-0942PUS1	:	PILOT PROGRAM

This is a decision on the petition under 37 CFR 1.102, filed on July 5, 2011, to make the above-identified application special under the pilot program for applications pertaining to Green Technologies as set forth 74 Federal Register Notice 64666 (December 8, 2009) and amended by 75 Federal Register Notice 28554 (May 21, 2010) and 75 Federal Register Notice 69049 (November 10, 2010).

The petition is **GRANTED**.

A grantable petition to make an application special under 37 CFR 1.102 and the pilot program as set forth in 74 FR 64666 must be directed to a nonprovisional application filed under 35 USC 111(a) or be a national stage entry under 35 USC 371, exclusive of any reissue applications.

In order to qualify for special status, the following requirements must be met. 1) The application must have no more than 3 independent claims and no more than 20 total claims. 2) The application must not contain any multiple dependent claims. 3) The petition must state the basis for seeking special status, i.e., the claimed invention either: A) materially enhances the quality of the environment or B) materially contributes to: i) the discovery or development of renewable energy resources, ii) the more efficient utilization and conservation of energy resources, or iii) greenhouse gas emission reduction. 4) If the disclosure is not clear on its face that the claimed invention materially contributes under category (A) or (B), the petition must be accompanied by a statement by the applicant, assignee, or an attorney/agent registered to practice before the Office explaining how the materiality standard is met. 5) A statement that applicant will agree to make an election without traverse in a telephonic interview if a restriction requirement is made by the examiner. 6) The petition to make special must be filed electronically. 7) The petition must be filed at least one day prior to the date that a first Office Action appears in the Patent Application Information Retrieval (PAIR) system. 8) The petition must be accompanied by a request for early publication in compliance with 37 CFR 1.219 and include the publication fee as set forth in 37 CFR 1.18(d).

The requirement for a fee for consideration of the petition to make special for applications pertaining to Green Technologies has been waived.

The instant petition complies with items 1 – 8 above. Accordingly, the above-identified application has been accorded "special" status.

Telephone inquires concerning this decision should be directed to Colleen Dunn at 571-272-1170.

The application is being forwarded to the appropriate Technology Center Art Unit for action on the merits commensurate with this decision.

/Colleen Dunn/

Colleen Dunn
Quality Assurance Specialist
Technology Center 2800

Doc Code: PET.GREEN
Document Description: Petition for Green Tech Pilot

PTO/SB/420 (05-10)
Approved for use through 05/31/2010. OMB 0651-0062
U.S. Patent and Trademark Office; U. S. DEPARTMENT OF COMMERCE
Under the Paperwork Reduction Act of 1995, no persons are required to respond to a collection of information unless it displays a valid OMB control number.

PETITION TO MAKE SPECIAL UNDER THE GREEN TECHNOLOGY PILOT PROGRAM

Attorney Docket Number: 1630-0956PUS1	Application Number (if known):	Filing date: JUL 05 2011
First Named Inventor: Soohyun KIM		
Title: THIN FILM SOLAR CELL AND METHOD FOR MANUFACTURING THE SAME		

APPLICANT HEREBY REQUESTS TO PARTICIPATE IN THE GREEN TECHNOLOGY PILOT PROGRAM FOR THE ABOVE-IDENTIFIED APPLICATION. See Instruction Sheet on page 2.

This petition must be timely filed electronically using the USPTO electronic filing system, EFS-Web.

1. By filing this petition:

   Applicant is requesting early publication: Applicant hereby requests early publication under 37 CFR 1.219 and the publication fee set forth in 37 CFR 1.18(d) accompanies this request.

2. By filing this petition: applicant is agreeing to make an election without traverse in a telephonic interview and elect an invention that meets the eligibility requirements set forth in the notice titled "Pilot Program for Green Technologies Including Greenhouse Gas Reduction," as modified by the notice titled "Elimination of Classification Requirement in the Green Technology Pilot Program," each of which was published in the Federal Register, if the Office determines that the claims are not obviously directed to a single invention.

3. This request is accompanied by statements of special status for the eligibility requirement.

4. The application contains no more than three (3) independent claims and twenty (20) total claims.

5. The application does not contain any multiple dependent claims.

6. Other attachments: _____

Signature	Date JUL 05 2011
Name (Print/Typed) Esther H. Chong	Registration Number 40953

Note: *Signatures of all the inventors or assignees of record of the entire interest or their representative(s) are required in accordance with 37 CFR 1.33 and 11.18. Please see 37 CFR 1.4(d) for the form of the signature. If necessary, submit multiple forms for more than one signature, see below*.*

☐ *Total of _____ forms are submitted.

The information is required to obtain or retain a benefit by the public which is to file (and by the USPTO to process) an application. Confidentiality is governed by 35 U.S.C. 122 and 37 CFR 1.11 and 1.14. This collection is estimated to take 12 hours to complete, including gathering, preparing, and submitting the completed application form to the USPTO. Time will vary depending upon the individual case. Any comments on the amount of time you require to complete this form and/or suggestions for reducing this burden, should be sent to the Chief Information Officer, U.S. Patent and Trademark Office, U.S. Department of Commerce, P.O. Box 1450, Alexandria, VA 22313-1450. DO NOT SEND FEES OR COMPLETED FORMS TO THIS ADDRESS. **SEND TO: Commissioner for Patents, P.O. Box 1450, Alexandria, VA 22313-1450.**

If you need assistance in completing the form, call 1-800-PTO-9199 and select option 2.

Docket No.: 1630-0956PUS1
(Patent)

IN THE UNITED STATES PATENT AND TRADEMARK OFFICE

Patent Application of:
Soohyun KIM et al.

Application No.:	NEW	Confirmation No.:	
Filed:	JUL 05 2011	Art Unit:	Not Yet Assigned
For:	THIN FILM SOLAR CELL AND METHOD FOR MANUFACTURING THE SAME	Examiner:	Not Yet Assigned

STATEMENT OF SPECIAL STATUS FOR THE ELIGIBILITY REQUIREMENT UNDER THE GREEN TECHNOLOGY PILOT PROGRAM

Commissioner for Patents
P.O. Box 1450
Alexandria, VA 22313-1450

Sir:

In support of the Petition to Make Special Under the Green Technology Pilot Program, it is respectfully submitted that the basis for the requested special status is that the invention claimed in the above-identified patent application materially contributes to the development of renewable energy sources and/or green house gas emission reduction. Specifically, the claimed invention relates to a solar cell.

Additionally, by filing this petition, the applicant agrees to make an election without traverse in a telephone interview and elect an invention that meets the eligibility requirements set for in the notice titled "Pilot Program for Green Technologies Including Greenhouse Gas Reduction," as modified by the notice titled "Elimination of Classification Requirement in the Green Technology Pilot Program," each of which was published in the Federal Register, if the Office determines that the claims are not obviously directed to a single invention.

It is also submitted that this application meets the eligibility requirements to participate in the Green Technology Pilot Program, as listed in the attached Petition to Make Special Under the Green Technology Pilot Program.

Accordingly, it is respectfully requested that the Petition be granted.

Should there be any outstanding matters that need to be resolved in the present application, the Examiner is respectfully requested to contact Seth S. Kim, Reg. No. 54,577, at the telephone number of the undersigned below to conduct an interview in an effort to expedite prosecution in connection with the present application.

If necessary, the Director is hereby authorized in this, concurrent, and future replies to charge any fees required during the pendency of the above-identified application or credit any overpayment to Deposit Account No. 02-2448.

Dated: JUL 05 2011

Respectfully submitted,

By _____

Esther H. Chong
Registration No.: 40953
BIRCH, STEWART, KOLASCH & BIRCH, LLP
8110 Gatehouse Road, Suite 100 East
P.O. Box 747
Falls Church, VA 22040-0747
703-205-8000

UNITED STATES PATENT AND TRADEMARK OFFICE

UNITED STATES DEPARTMENT OF COMMERCE
United States Patent and Trademark Office
Address: COMMISSIONER FOR PATENTS
P.O. Box 1450
Alexandria, Virginia 22313-1450
www.uspto.gov

APPLICATION NO.	FILING DATE	FIRST NAMED INVENTOR	ATTORNEY DOCKET NO.	CONFIRMATION NO.
13/176,673	07/05/2011	Soohyun Kim	1630-0956PUS1	4975

2292 7590 08/22/2011
BIRCH STEWART KOLASCH & BIRCH
PO BOX 747
FALLS CHURCH, VA 22040-0747

EXAMINER	
ART UNIT	PAPER NUMBER
1725	

NOTIFICATION DATE	DELIVERY MODE
08/22/2011	ELECTRONIC

Please find below and/or attached an Office communication concerning this application or proceeding.

The time period for reply, if any, is set in the attached communication.

Notice of the Office communication was sent electronically on above-indicated "Notification Date" to the following e-mail address(es):

mailroom@bskb.com

UNITED STATES PATENT AND TRADEMARK OFFICE

Commissioner for Patents
United States Patent and Trademark Office
P.O. Box 1450
Alexandria, VA 22313-1450
www.uspto.gov

BIRCH STEWART KOLASCH & BIRCH
PO BOX 747
FALLS CHURCH VA 22040-0747

AUG 22 2011

In re Application of	:	
Soohyun Kim et al.	:	DECISION ON PETITION
Application No. 13/176,673	:	TO MAKE SPECIAL UNDER
Filed: July 05, 2011	:	THE GREEN TECHNOLOGY
Attorney Docket No. 1630-0956PUS1	:	PILOT PROGRAM

This is a decision on the petition under 37 CFR 1.102, filed July 05, 2011, to make the above-identified application special under the pilot program for applications pertaining to Green Technologies as set forth in 74 Federal Register Notice 64666 (December 8, 2009) and amended by 75 Federal Register Notice 28554 (May 21, 2010) and 75 Federal Register Notice 69049 (November 10, 2010).

The petition is **GRANTED**.

A grantable petition to make an application special under 37 CFR 1.102 and the pilot program as set forth in 74 FR 64666 must be directed to a nonprovisional application filed under 35 USC 111(a) or be a national stage entry under 35 USC 371, exclusive of any reissue applications.

In order to qualify for special status, the following requirements must be met. 1) The application must have no more than 3 independent claims and no more than 20 total claims. 2) The application must not contain any multiple dependent claims. 3) The petition must state the basis for seeking special status, i.e., the claimed invention either: A) materially enhances the quality of the environment or B) materially contributes to: i) the discovery or development of renewable energy resources, ii) the more efficient utilization and conservation of energy resources, or iii) greenhouse gas emission reduction. 4) If the disclosure is not clear on its face that the claimed invention materially contributes under category (A) or (B), the petition must be accompanied by a statement by the applicant, assignee, or an attorney/agent registered to practice before the Office explaining how the materiality standard is met. 5) A statement that applicant will agree to make an election without traverse in a telephonic interview if a restriction requirement is made by the examiner. 6) The petition to make special must be filed electronically. 7) The petition must be filed at least one day prior to the date that a first Office Action appears in the Patent Application Information Retrieval (PAIR) system. 8) The petition must be accompanied by a request for early publication in compliance with 37 CFR 1.219 and include the publication fee as set forth in 37 CFR 1.18(d).

The requirement for a fee for consideration of the petition to make special for applications pertaining to Green Technologies has been waived.

The instant petition complies with items 1 – 8 above. Accordingly, the above-identified application has been accorded "special" status.

Telephone inquires concerning this decision should be directed to Blaine Copenheaver at 571-272-1156.

The application is being forwarded to the examiner for action on the merits commensurate with this decision.

/Blaine Copenheaver/

Blaine Copenheaver
Quality Assurance Specialist
Technology Center 1700

UNITED STATES PATENT AND TRADEMARK OFFICE

UNITED STATES DEPARTMENT OF COMMERCE
United States Patent and Trademark Office
Address: COMMISSIONER FOR PATENTS
P.O. Box 1450
Alexandria, Virginia 22313-1450
www.uspto.gov

APPLICATION NO.	FILING DATE	FIRST NAMED INVENTOR	ATTORNEY DOCKET NO.	CONFIRMATION NO.
13/176,719	07/05/2011	Mathieu Lion	70158-00102	5063

58688 7590 08/18/2011

CONNOLLY BOVE LODGE & HUTZ LLP
P.O. BOX 2207
WILMINGTON, DE 19899

EXAMINER	
ART UNIT	PAPER NUMBER
1743	

MAIL DATE	DELIVERY MODE
08/18/2011	PAPER

Please find below and/or attached an Office communication concerning this application or proceeding.

The time period for reply, if any, is set in the attached communication.

UNITED STATES PATENT AND TRADEMARK OFFICE

Commissioner for Patents
United States Patent and Trademark Office
P.O. Box 1450
Alexandria, VA 22313-1450
www.uspto.gov

AUG 18 2011 CST

In re application of	:	
Mathieu Lion et al	:	
Serial No. 13/176,719	:	DECISION ON PETITION
Filed: July 5, 2011	:	TO MAKE SPECIAL
For: MICROWAVABLE COOKING IMPLEMENTS AND METHODS FOR CRISPING FOOD ITEMS USING THE SAME	:	

This is a decision on the petition filed on July 5, 2011 to make the above-identified application special under the accelerated examination program.

The petition to make the application special is **DISMISSED.**

REGULATION AND PRACTICE

A grantable petition to make special under 37 C.F.R. § 1.102(d) and pursuant to the "Change to Practice for Petitions in Patent Applications to Make Special and for Accelerated Examination" published in the Federal Register on June 26, 2006 (71 Fed. Reg. 36323), must satisfy the following conditions:

I. Conditions Regarding the Application:

1. the application must be a non-reissue utility or design application filed under 37 CFR 1.111(a);

2. the application, the petition and the required fees must be filed electronically using the USPTO's electronic filing system (EFS), or EFS-web; if not filed electronically, a statement asserting that EFS and EFS-web were not available during the normal business hours;

3. at the time of filing, the application must be complete under 37 CFR 1.51 and in condition for examination;

4. the application must contain three or fewer independent claims and twenty or fewer total claims and the claims must be directed to a single invention.

II. Conditions Regarding the Petition:

The petition must:

1. be filed with the application;

2. include a statement that applicant agrees not to separately argue the patentability of any dependent claim during any appeal in the application;

3. include a statement that applicant agrees to make an election without traverse in a telephone interview;

4. include a statement that applicant agrees to conduct such an interview when requested by the examiner;

5. include a statement, made based on a good faith belief, that a preexamination search in compliance with the following requirements, was conducted, including an identification of the field of search by United States class and subclass, where applicable, and for database searches, the search logic or chemical structure or sequence used as a query, the name of the file(s) searched and the database service, and the date of the search.

The preexamination search must:

5.1 involve U.S. patents and patent application publications, foreign patent documents, and non-patent literature, unless the applicant can justify with reasonable certainty that no references more pertinent than those already identified are likely to be found in the eliminated sources and includes such a justification with this statement;

5.2. be directed to the claimed invention and encompass all of the features of the claims, giving the claims the broadest reasonable interpretation;

5.3. encompass the disclosed features that may be claimed.

6. must provide in support of the petition an accelerated examination support document.

An accelerated examination support document must include:

6.1. an information disclosure statement (IDS) in compliance with 37 CFR 1.98 citing each reference deemed most closely related to the subject matter of each of the claims;

6.2. an identification of all the limitations in the claims that are disclosed by the reference specifying where the limitation is disclosed in the cited reference;

6.3. a detailed explanation of how each of the claims are patentable over the references cited with particularity required by 37 CFR 1.111(b) and (c);

6.4. a concise statement of the utility of the invention as defined in each of the independent claims (unless the application is a design application);

6.5. a showing of where each limitation of the claims finds support under 35 USC 112, first paragraph, in the written description of the specification. If applicable, the showing must also identify: (1) each means- (or step) plus-function claim element that invokes consideration under 35 USC 112, sixth paragraph; and (2) the structure, material, or acts in the specification that corresponds to each means- (or step) plus-function claim element that invokes consideration under 35 USC 112, sixth paragraph; if the application claims the benefit of one or more applications under title 35, United States Code, the showing must also include where each limitation of the claims finds support

under 35 USC 112, first paragraph, in each such application in which such supports exists;

6.6. an identification of any cited references that may be disqualified under 35 USC 103(c).

REVIEW OF FACTS

The conditions regarding the application (section I, subsections 1-4) discussed above are considered to have been met. Additionally, the conditions regarding the petition, section II, subsections 1-4, are considered to have been met. However, the petition fails to comply with condition II, subsections 5 and 6.

First, it appears that the search is incomplete. Note that a search in Class 99/subclass 450, Class 219/subclass 759 and Class 220/subclasses 9.1, 9.4, 639 and 643 is also required.

Secondly, it is required that petitioner provide a showing of where each limitation of each of the claims finds support under 35 USC 112, first paragraph, in the written description of the present specification. Merely stating that support for the claim as a whole, is found in various paragraphs of the specification and figures, is not sufficient.

It is also noted that petitioner has provided a showing of where each limitation of the claims finds support under 35 USC 112, first paragraph, in the written description of parent application 11/157,747 (US 7,861,886) and application 12/984,557, however, it is also required that petitioner provide a showing of where each limitation of the claims finds support under 35 USC 112, first paragraph, in the written description of parent applications 12/202,124, 10/854,865 and 10/883,348, as applicant has claimed priority to these applications.

DECISION

For the above-stated reasons, the petition is dismissed. The application will therefore be taken up by the examiner in its regular turn.

Petitioner is given a single opportunity to perfect the petition. Any request for reconsideration of this decision must be submitted within 1 (one) month or 30 (thirty) days, whichever is longer, (no extension of time under 37 CFR 1.136(a)) from the date of this decision in order to be considered timely. Any request for reconsideration must address the deficiencies indicated above.

Petitioner is reminded that, upon granting of the special status of the application on request for reconsideration, the application will be processed expeditiously. However, due to the dismissal of the instant petition, examination may not be completed within twelve months of the filing date of the application.

Any inquiry regarding this decision should be directed to Christine Tierney, Quality Assurance Specialist, at (571) 272-1055.

/Christine Tierney/

Christine Tierney
Quality Assurance Specialist
Technology Center 1700

UNITED STATES PATENT AND TRADEMARK OFFICE

UNITED STATES DEPARTMENT OF COMMERCE
United States Patent and Trademark Office
Address: COMMISSIONER FOR PATENTS
P.O. Box 1450
Alexandria, Virginia 22313-1450
www.uspto.gov

APPLICATION NO.	FILING DATE	FIRST NAMED INVENTOR	ATTORNEY DOCKET NO.	CONFIRMATION NO.
13/176,719	07/05/2011	Mathieu Lion	70158-00102	5063

58688 7590 10/05/2011

CONNOLLY BOVE LODGE & HUTZ LLP
P.O. BOX 2207
WILMINGTON, DE 19899

EXAMINER	
ART UNIT	PAPER NUMBER
1743	

MAIL DATE	DELIVERY MODE
10/05/2011	PAPER

Please find below and/or attached an Office communication concerning this application or proceeding.

The time period for reply, if any, is set in the attached communication.

UNITED STATES PATENT AND TRADEMARK OFFICE

Commissioner for Patents
United States Patent and Trademark Office
P.O. Box 1450
Alexandria, VA 22313-1450
www.uspto.gov

CST

OCT 05 2011

In re application of	:	
Mathieu Lion et al	:	
Serial No. 13/176,719	:	DECISION ON PETITION
Filed: July 5, 2011	:	TO MAKE SPECIAL
For: MICROWAVABLE COOKING IMPLEMENTS AND METHODS FOR CRISPING FOOD ITEMS USING THE SAME	:	

This is a decision on the Request for Reconsideration of Petition to Make Special under the Accelerated Examination Program filed on September 16, 2011 to make the above-identified application special.

The petition to make the application special is **GRANTED.**

The application is eligible for accelerated examination and the petition complies with the conditions for granting the application special status pursuant to the "Change to Practice for Petitions in Patent Applications to Make Special and for Accelerated Examination" published June 26, 2006, in the Federal Register. (71 Fed. Reg. 36323).

The prosecution of the instant application will be conducted expeditiously according to the following guidelines.

1. The application will be docketed to an examiner and taken up for action within two weeks of the date of this decision.

2. Restriction Practice:
   If the examiner determines that the claims are not directed to a single invention, a telephone request to elect one single invention will be made pursuant to MPEP 812.01. As a prerequisite to the grant of this petition, the applicant has agreed to make an oral election, by telephone, without traverse. If the applicant refuses to make an election without traverse, or the examiner cannot reach the applicant after a reasonable effort, the examiner will treat the first claimed invention (invention defined by claim 1) as having being constructively elected without traverse for examination.

3. Office action:
   If it is determined that, after appropriate consultation, there is a potential rejection or any other issue to be addressed, the examiner will telephone the applicant and arrange an interview to discuss and resolve the issue. An Office action, other than a Notice of Allowance and Fee(s) Due (Notice of Allowance), will not be issued unless either: 1) an interview was conducted but did not result in agreed to action that places the application in condition for allowance, or, 2) a determination is made that an interview would be unlikely to result in the application being placed in condition for allowance, and 3) an internal conference has been held to review any rejection of any claim.

4. Time for Reply:
   An Office action other than a Notice of Allowance or a final Office action will set a shortened statutory period of one month or thirty days, whichever is longer, for reply with no extension of time available under 37 CFR 1.136(a). Failure to timely file a reply within this non-extendible period for reply will result in the abandonment of the application.

5. Reply by Applicant:
   A timely reply to an Office action other than the Notice of Allowance must be submitted electronically via EFS or EFS-web and limited to addressing the rejections, objections and requirement made. Any amendment that attempts to: 1) add claims which would result in more than three pending independent claims or more than twenty pending total claims; 2) present claims not encompassed by the pre-examination search or an updated accelerated examination support document; or 3) present claims that are directed a non-elected invention or an invention other than that previously claimed and examined in the application, will be treated as not fully responsive and will not be entered.

   For any amendment to the claims (including any new claim) that is not encompassed by the accelerated examination support document, applicant must provide an updated accelerated examination support document that encompasses the amended or new claims at the time of filing of the amendment.

   To proceed expeditiously with the examination, it is recommended that a reply with amendments made to any claim or with any new claim being added be accompanied by an updated accelerated examination support document or a statement explaining how the amended or new claim is supported by the original accelerated examination support document.

6. Information Disclosure Statement (IDS):
   Any IDS filed during prosecution must be submitted electronically via EFS or EFS-web, accompanied by an updated accelerated examination support document, and be in compliance with 37 CFR 1.97 and 1.98.

7. Post-Allowance Processing:
   To expedite processing of the allowed application into a patent, the applicant must: 1) pay the required fees within one month of the date of the Notice of Allowance, and 2) not file any post allowance papers not required by the Office. In no event may the issue fee be paid and accepted later than three months from the date of the Notice of Allowance.

8. After-Final and Appeal Procedures:
   To expedite prosecution, after receiving the final Office action, applicant must: 1) promptly file a notice of appeal, an appeal brief and appeal fees; and 2) not request a pre-appeal brief conference.

   Any amendment, affidavit or other evidence filed after final Office action must comply with applicable rules and the requirements outlined in numbered paragraphs 5 and 6 above.

   On appeal, the application will proceed according to normal appeal procedures. After appeal, the application will again be treated special.

9. Proceedings Outside the Normal Examination Process:
   If the application becomes involved in a proceeding that is outside the normal examination process (e.g., a secrecy order, national security review, interference proceeding, petitions under 37 CFR 1.181, 182 or 183), the application will be treated special before and after such proceeding.

10. Final Disposition:
    The twelve-month goal of this accelerated examination procedure ends with a final disposition. The mailing of a final Office action, a Notice of Allowance, the filing of a Notice of Appeal, or the filing of a Request for Continued Examination (RCE) is the final disposition.

If, during prosecution, a paper is not filed electronically using EFS-web, a reply is filed but is not fully responsive, the application is involved in an appeal, or a proceeding outside normal examination process, the application will still be examined expeditiously, however, the final disposition may occur more than twelve months from the filing of the application.

Any inquiry regarding this decision should be directed to Christine Tierney, Quality Assurance Specialist, at (571) 272-1055.

/Christine Tierney/

Christine Tierney
Quality Assurance Specialist
Technology Center 1700

UNITED STATES PATENT AND TRADEMARK OFFICE

Commissioner for Patents
United States Patent and Trademark Office
P.O. Box 1450
Alexandria, VA 22313-1450
www.uspto.gov

DAVE S. CHRISTENSEN
CANTOR COLBURN, LLP
20 CHURCH STREET, 22ND FLOOR
HARTFORD CT 06103

MAILED

OCT 17 2011

OFFICE OF PETITIONS

In re Application of :
Glenn E. Vallee et al. :
Application No. 13/176,978 : ON PETITION
Filed: July 6, 2011 :
Attorney Docket No.:**WNE0008US2** :

This is a decision on the petition under 37 CFR 1.182, filed October 11, 2011, to change the order of the names of the inventors.

The petition is **GRANTED**.

The instant petition has been submitted with an updated Application Data Sheet.

The order of the names of the inventors has been changed as follows:

1) Glenn E. Vallee
2) James C. McKeon
3) Eric D. Perkins
4) Gregory J. O'Brien
5) Daniel James Goodwin
6) Nicholas W. Kantany

A corrected filing receipt reflecting the correct order of the names of the inventors is attached.

This matter is being referred to the Office of Patent Application Processing for further pre-examination processing and for a mailing of the Corrected Filing Receipt.

Telephone inquiries concerning this matter may be directed to the undersigned Petitions Attorney at (571) 272-3212.

Patricia Faison-Ball

Patricia Faison-Ball
Senior Petitions Attorney
Office of Petitions

UNITED STATES PATENT AND TRADEMARK OFFICE

Commissioner for Patents
United States Patent and Trademark Office
P.O. Box 1450
Alexandria, VA 22313-1450
www.uspto.gov

HOWARD & HOWARD ATTORNEYS PLLC
450 West Fourth Street
Royal Oak MI 48067

MAILED
SEP 21 2011
OFFICE OF PETITIONS

In re Application of :
Joseph Szuba :
Application No. 13/177,018 : DECISION ON PETITION
Filed: July 16, 2011 : TO MAKE SPECIAL UNDER
Attorney Docket No. **060888.00012** : 37 CFR 1.102(c)(1)
:

This is a decision on the petition under 37 CFR 1.102(c)(1), filed September 15, 2011, to make the above-identified application special based on applicant's age as set forth in MPEP § 708.02, Section IV.

The petition is **GRANTED**.

A grantable petition to make an application special under 37 CFR 1.102(c)(1) and MPEP § 708.02, Section IV: Applicant's Age must be accompanied by evidence showing that at least one of the applicants is 65 years of age, or more, such as a birth certificate or a statement by applicant. No fee is required

The instant petition includes a statement by a registered attorney. Accordingly, the above-identified application has been accorded "special" status.

Telephone inquiries concerning this decision should be directed to JoAnne Burke at 571-272-4584.

All other inquiries concerning either the examination or status of the application should be directed to the Technology Center.

The application is being forwarded to Technology Center AU 3679 for action on the merits commensurate with this decision.

/JoAnne Burke/
JoAnne Burke
Petitions Examiner
Office of Petitions

UNITED STATES PATENT AND TRADEMARK OFFICE

UNITED STATES DEPARTMENT OF COMMERCE
United States Patent and Trademark Office
Address: COMMISSIONER FOR PATENTS
P.O. Box 1450
Alexandria, Virginia 22313-1450
www.uspto.gov

APPLICATION NO.	FILING DATE	FIRST NAMED INVENTOR	ATTORNEY DOCKET NO.	CONFIRMATION NO.
13/177,027	07/06/2011	Junichi OHNISHI	27813Z	5656

23389 7590 10/25/2011

SCULLY SCOTT MURPHY & PRESSER, PC
400 GARDEN CITY PLAZA
SUITE 300
GARDEN CITY, NY 11530

EXAMINER	
ART UNIT	PAPER NUMBER
2624	

MAIL DATE	DELIVERY MODE
10/25/2011	PAPER

Please find below and/or attached an Office communication concerning this application or proceeding.

The time period for reply, if any, is set in the attached communication.

UNITED STATES PATENT AND TRADEMARK OFFICE

Commissioner for Patents
United States Patent and Trademark Office
P.O. Box 1450
Alexandria, VA 22313-1450
www.uspto.gov

**SCULLY SCOTT MURPHY &
PRESSER, PC
400 GARDEN CITY PLAZA
SUITE 300
GARDEN CITY NY 11530**

**In re Application of
Junichi OHNISHI
Application No.: 13/177,027
Filed: 06 July 2011
Attorney Docket No.: 27813Z
For: MEDICAL INSTRUMENT AND MEDICAL INSTRUMENT CONTROL METHOD**

**: DECISION ON REQUEST TO
: PARTICIPATE IN THE PATENT
: PROSECUTION HIGHWAY
: PROGRAM AND PETITION
: TO MAKE SPECIAL UNDER
: 37 CFR 1.102(a)**

This is a decision on the request to participate in the Patent Prosecution Highway (PPH) program and the petition under 37 CFR 1.102(a), filed 04 October 2011, to make the above-identified application special.

The request and petition are **GRANTED**.

Discussion

A grantable request to participate in the PPH pilot program and petition to make special require:

1. The U.S. application is

    a. a Paris Convention application which either
        i. validly claims priority under 35 U.S.C. 119(a) and 37 CFR 1.55 to one or more applications filed in the JPO, or
        ii. validly claims priority to a PCT application that contains no priority claims, or
    b. a national stage application under the PCT (an application which entered the national stage in the U.S. from a PCT international application after compliance with 35 U.S.C. 371), which PCT application
        i. validly claims priority to an application filed in the JPO, or
        ii. validly claims priority to a PCT application that contains no priority claims, or
        iii. contains no priority claim, or
    c. a so-called bypass application filed under 35 U.S.C. 111(a) which validly claims benefit under 35 U.S.C. 120 to a PCT application, which PCT application
        i. validly claims priority to an application filed in the JPO, or

ii. validly claims priority to a PCT application that contains no priority claims, or
iii. contains no priority claim;

2. Applicant must submit a copy of:
   a. The allowable/patentable claim(s) from the JPO application(s);
   b. An English translation of the allowable/patentable claim(s) and
   c. A statement that the English translation is accurate;
3. Applicant must:
   a. Ensure all the claims in the U.S. application must sufficiently correspond or be amended to sufficiently correspond to the allowable/patentable claim(s) in the JPO application(s) and
   b. Submit a claims correspondence table in English;
4. Examination of the U.S. application has not begun;
5. Applicant must submit:
   a. Documentation of prior office action:
      i. a copy of the office action(s) just prior to the "Decision to Grant a Patent" from each of the JPO application(s) containing the allowable/patentable claim(s) or
      ii. if the allowable/patentable claims(s) are from a "Notification of Reasons for Refusal" then the Notification of Reasons for Refusal or
      iii. if the JPO application is a first action allowance then no office action from the JPO is necessary should be indicated on the request/petition form;
   b. An English language translation of the JPO Office action from (5)(a)(i)-(ii) above
   c. A statement that the English translation is accurate;
6. Applicant must submit:
   a. An IDS listing the documents cited by the JPO examiner in the JPO office action (unless already submitted in this application)
   b. Copies of the documents except U.S. patents or U.S. patent application publications (unless already submitted in this application);

The request to participate in the PPH pilot program and petition comply with the above requirements. Accordingly, the above-identified application has been accorded "special" status.

Inquiries concerning this decision should be directed to Lee W. Young at 571-272-4549.

All other inquiries concerning the examination or status of the application is accessible in the PAIR system at http://www.uspto.gov/ebc.index.html.

This application will be forwarded to the examiner for action on the merits commensurate with this decision once this application's formality reviews have been completed.

Lee W. Young
Quality Assurance Specialist
Technology Center 2600

Doc Code: PET.GREEN
Document Description: Petition for Green Tech Pilot

PTO/SB/420 (11-10)
Approved for use through 01/31/2011. OMB 0651-0062
U.S. Patent and Trademark Office; U.S. DEPARTMENT OF COMMERCE
Under the Paperwork Reduction Act of 1995, no persons are required to respond to a collection of information unless it displays a valid OMB control number.

PETITION TO MAKE SPECIAL UNDER THE GREEN TECHNOLOGY PILOT PROGRAM

Attorney Docket Number:	23431-80136	Application Number (if known):	13/177,088	Filing date: July 6, 2011

First Named Inventor: An-Ting Cheng

Title: METHOD FOR CLEANING DEPOSITION CHAMBER

APPLICANT HEREBY REQUESTS TO PARTICIPATE IN THE GREEN TECHNOLOGY PILOT PROGRAM FOR THE ABOVE-IDENTIFIED APPLICATION. See Instruction Sheet on page 2.

This petition must be timely filed electronically using the USPTO electronic filing system, EFS-Web.

1. By filing this petition:

   Applicant is requesting early publication: Applicant hereby requests early publication under 37 CFR 1.219 and the publication fee set forth in 37 CFR 1.18(d) accompanies this request.

2. By filing this petition: applicant is agreeing to make an election without traverse in a telephonic interview and elect an invention that meets the eligibility requirements for the Green Technology Pilot Program, if the Office determines that the claims are not obviously directed to a single invention. See Instruction Sheet.

3. This request is accompanied by statements of special status for the eligibility requirement.

4. The application contains no more than three (3) independent claims and twenty (20) total claims.

5. The application does not contain any multiple dependent claims.

6. Other attachments: STATEMENT OF SPECIAL STATUS FOR THE ELIGIBILITY REQUIREMENT

Signature	/Tim Tingkang Xia/	Date	July 6, 2011
Name (Print/Typed)	Tim Tingkang Xia	Registration Number	45,242

***Note**: Signatures of all the inventors or assignees of record of the entire interest or their representative(s) are required in accordance with 37 CFR 1.33 and 11.18. Please see 37 CFR 1.4(d) for the form of the signature. If necessary, submit multiple forms if more than one signature, see below*.*

☐ *Total of 1 forms are submitted.

S/N 13/177,088

PATENT
Confirmation No.: 5788

IN THE UNITED STATES PATENT AND TRADEMARK OFFICE

Applicant:	An-Ting Cheng	Examiner:	Unassigned
Serial No.:	13/177,088	Group Art Unit:	Unassigned
Filed:	June 6, 2011	Docket:	23431-80136

Title: METHOD FOR CLEANING DEPOSITION CHAMBER

STATEMENT OF SPECIAL STATUS FOR THE ELIGIBILITY REQUIREMENT

Mail Stop: Petition
Commissioner of Patents
P.O. Box 1450
Alexandria, Virginia 22313-1450

July 6, 2011

CUSTOMER NO. 24728

Dear Sir/Madam:

This Statement of Special Status for the Eligibility Requirement is filed pursuant to the requirements listed in PTO/SB/420, filed herewith, and pursuant to the requirements of 74 Fed. Reg. 64,666 (Dec. 8, 2009), as amended by 75 Fed. Reg. 28,554 (May 21, 2010), and 75 Fed. Reg. 69,049 (November 10, 2010).

A basis for the special status is that aspects of the invention relate to ***manufacturing of solar cells*** that ***materially contribute to the discovery or development of renewable energy resources***. A glass substrate for fabricating solar cells is formed in a deposition chamber. A contamination in the deposition chamber will deteriorate the electrical property of the solar cells. By improving the method for cleaning the deposition chamber, the present application improves electrical property and increases the production yield of the solar cells..

The above-referenced application is a non-reissue, non-provisional utility application filed June 1, 2011 under 35 U.S.C. § 111(a). The application contains no more than three (3) independent claims and twenty (20) total claims. The application does not contain any multiple dependent claims. Further, applicant respectfully submits that the claims of the application are directed to a single invention of a method for cleaning deposition chamber to improve quality of

a solar cell. However, if the USPTO determines that the claims are directed to multiple inventions (e.g., in a restriction requirement), applicant agrees to make an election without traverse in a telephonic interview, and elect an invention that meets the eligibility requirements.

A first Office action (including an Office action containing only a restriction requirement) has not yet appeared in the Patent Application Information Retrieval (PAIR) system.

A request for early publication of the present application in compliance with 37 CFR 1.219 and the publication fee set forth in 37 CFR 1.18(d) are concurrently accompanied herewith this petition.

It is believed that no fee is due. However, the Commissioner is hereby authorized to charge any petition fee under 37 CFR 1.102, and any deficiency of fees which may be required, or to credit of any overpayments to Deposit Account No. 50-3537.

The Applicant respectfully requests that a favorable decision on this Petition to Make Special Under the Green Technology Pilot Program be granted and the application be accorded special status under the Green Technology Pilot Program.

Respectfully submitted,

MORRIS, MANNING & MARTIN, LLP

July 6, 2011

Tim Tingkang Xia
Attorney for Applicant on the Record
Reg. No. 45,242

MORRIS, MANNING & MARTIN, LLP
1600 Atlanta Financial Center
3343 Peachtree Road, N.E.
Atlanta, Georgia 30326-1044
Phone: 404-233-7000
Direct: 404-495-3678
Customer No. 24728

UNITED STATES PATENT AND TRADEMARK OFFICE

UNITED STATES DEPARTMENT OF COMMERCE
United States Patent and Trademark Office
Address: COMMISSIONER FOR PATENTS
P.O. Box 1450
Alexandria, Virginia 22313-1450
www.uspto.gov

APPLICATION NO.	FILING DATE	FIRST NAMED INVENTOR	ATTORNEY DOCKET NO.	CONFIRMATION NO.
13/177,088	07/06/2011	An-Ting Cheng	23898-80136	5788

24728 7590 08/22/2011

MORRIS MANNING MARTIN LLP
3343 PEACHTREE ROAD, NE
1600 ATLANTA FINANCIAL CENTER
ATLANTA, GA 30326

EXAMINER	
ART UNIT	PAPER NUMBER
1711	

NOTIFICATION DATE	DELIVERY MODE
08/22/2011	ELECTRONIC

Please find below and/or attached an Office communication concerning this application or proceeding.

The time period for reply, if any, is set in the attached communication.

Notice of the Office communication was sent electronically on above-indicated "Notification Date" to the following e-mail address(es):

ipdocket@mmmlaw.com
ppz@mmmlaw.com
jlsmith@mmmlaw.com

UNITED STATES PATENT AND TRADEMARK OFFICE

Commissioner for Patents
United States Patent and Trademark Office
P.O. Box 1450
Alexandria, VA 22313-1450
www.uspto.gov

MORRIS MANNING MARTIN LLP
3343 PEACHTREE ROAD, NE
1600 ATLANTA FINANCIAL CENTER
ATLANTA GA 30326

AUG 22 2011

In re Application of :
An-Ting Cheng :
Application No. 13/177,088 :
Filed: July 06, 2011 :
Attorney Docket No. 23898-80136 :

DECISION ON PETITION
TO MAKE SPECIAL UNDER
THE GREEN TECHNOLOGY
PILOT PROGRAM

This is a decision on the petition under 37 CFR 1.102, filed July 06, 2011, to make the above-identified application special under the pilot program for applications pertaining to Green Technologies as set forth in 74 Federal Register Notice 64666 (December 8, 2009) and amended by 75 Federal Register Notice 28554 (May 21, 2010) and 75 Federal Register Notice 69049 (November 10, 2010).

The petition is **GRANTED**.

A grantable petition to make an application special under 37 CFR 1.102 and the pilot program as set forth in 74 FR 64666 must be directed to a nonprovisional application filed under 35 USC 111(a) or be a national stage entry under 35 USC 371, exclusive of any reissue applications.

In order to qualify for special status, the following requirements must be met. 1) The application must have no more than 3 independent claims and no more than 20 total claims. 2) The application must not contain any multiple dependent claims. 3) The petition must state the basis for seeking special status, i.e., the claimed invention either: A) materially enhances the quality of the environment or B) materially contributes to: i) the discovery or development of renewable energy resources, ii) the more efficient utilization and conservation of energy resources, or iii) greenhouse gas emission reduction. 4) If the disclosure is not clear on its face that the claimed invention materially contributes under category (A) or (B), the petition must be accompanied by a statement by the applicant, assignee, or an attorney/agent registered to practice before the Office explaining how the materiality standard is met. 5) A statement that applicant will agree to make an election without traverse in a telephonic interview if a restriction requirement is made by the examiner. 6) The petition to make special must be filed electronically. 7) The petition must be filed at least one day prior to the date that a first Office Action appears in the Patent Application Information Retrieval (PAIR) system. 8) The petition must be accompanied by a request for early publication in compliance with 37 CFR 1.219 and include the publication fee as set forth in 37 CFR 1.18(d).

The requirement for a fee for consideration of the petition to make special for applications pertaining to Green Technologies has been waived.

The instant petition complies with items 1 – 8 above. Accordingly, the above-identified application has been accorded "special" status.

Telephone inquires concerning this decision should be directed to Blaine Copenheaver at 571-272-1156.

The application is being forwarded to the examiner for action on the merits commensurate with this decision.

/Blaine Copenheaver/

Blaine Copenheaver
Quality Assurance Specialist
Technology Center 1700

UNITED STATES PATENT AND TRADEMARK OFFICE

Commissioner for Patents
United States Patent and Trademark Office
P.O. Box 1450
Alexandria, VA 22313-1450
www.uspto.gov

LAW OFFICE OF ROBERT E. KASODY, PROFESSIONAL CORP.
SUITE 500
6601 CENTER DRIVE WEST
LOS ANGELES, CA 90045

MAILED

OCT 03 2011

OFFICE OF PETITIONS

In re Application of	:	
Michael L. Beydler et al	:	
Application No. 13/177,097	:	DECISION ON PETITION
Filed: July 6, 2011	:	TO WITHDRAW
Attorney Docket No. APA.001A	:	FROM RECORD
	:	

This is a decision on the Request to Withdraw as attorney or agent of record under 37 C.F.R. § 1.36(b), filed September 24, 2011.

The request is **APPROVED**.

The request was signed by Robert E. Kasody on behalf of the practitioners of record associated with Customer Number 70515.

Applicant is reminded that there is no attorney of record at this time.

All future correspondence will be directed to assignee Advanced Predictive Analytics, Inc. at the address indicated below.

Telephone inquiries concerning this decision should be directed to Irvin Dingle at (571) 272-3210.

Irvin Dingle
Petitions Examiner
Office of Petitions

cc: Advanced Predictive Analytics, Inc.
513 E. First Street, Suite G
Tustin, CA 92780

UNITED STATES PATENT AND TRADEMARK OFFICE

UNITED STATES DEPARTMENT OF COMMERCE
United States Patent and Trademark Office
Address: COMMISSIONER FOR PATENTS
P.O. Box 1450
Alexandria, Virginia 22313-1450
www.uspto.gov

APPLICATION NUMBER	FILING OR 371(C) DATE	FIRST NAMED APPLICANT	ATTY. DOCKET NO./TITLE
13/177,097	07/06/2011	Michael L. Beydler	APA.001A

CONFIRMATION NO. 5807

Law Office of Robert E. Kasody, Professional Corp.
Suite 500
6601 Center Drive West
Los Angeles, CA 90045

POWER OF ATTORNEY NOTICE

OC000000050143950

Date Mailed: 10/03/2011

NOTICE REGARDING CHANGE OF POWER OF ATTORNEY

This is in response to the Power of Attorney filed 09/24/2011.

- The withdrawal as attorney in this application has been accepted. Future correspondence will be mailed to the new address of record. 37 CFR 1.33.

/idingle/

Office of Data Management, Application Assistance Unit (571) 272-4000, or (571) 272-4200, or 1-888-786-0101

UNITED STATES PATENT AND TRADEMARK OFFICE

UNITED STATES DEPARTMENT OF COMMERCE
United States Patent and Trademark Office
Address: COMMISSIONER FOR PATENTS
P.O. Box 1450
Alexandria, Virginia 22313-1450
www.uspto.gov

APPLICATION NUMBER	FILING OR 371(C) DATE	FIRST NAMED APPLICANT	ATTY. DOCKET NO./TITLE
13/177,097	07/06/2011	Michael L. Beydler	APA.001A

CONFIRMATION NO. 5807

Advanced Predictive Analytics, Inc.
513 E. First Street, Suite G
Tustin, CA 92780

POA ACCEPTANCE LETTER

OC000000050144063

Date Mailed: 10/03/2011

NOTICE OF ACCEPTANCE OF POWER OF ATTORNEY

This is in response to the Power of Attorney filed 09/24/2011.

The Power of Attorney in this application is accepted. Correspondence in this application will be mailed to the above address as provided by 37 CFR 1.33.

/idingle/

Office of Data Management, Application Assistance Unit (571) 272-4000, or (571) 272-4200, or 1-888-786-0101

UNITED STATES PATENT AND TRADEMARK OFFICE

Commissioner for Patents
United States Patent and Trademark Office
P.O. Box 1450
Alexandria, VA 22313-1450
www.uspto.gov

In re Application of
Fletcher Eyster

Application No. 13177098

Filed: July 6,2011

Attorney Docket No. 3719U.001

:
:
:DECISION ON PETITION TO MAKE SPECIAL
:UNDER 37 CFR 1.102(c)(1)
:

This is a decision on the electronic petition under 37 CFR 1.102 (c)(1), filed 04-APR-2012 to make the above-identified application special based on applicant's age as set forth in MPEP § 708.02, Section IV.

The petition is **GRANTED**.

A grantable petition to make an application special under 37 CFR 1.102(c)(1), MPEP § 708.02, Section IV: Applicant's Age must include a statement by applicant or a registered practitioner having evidence that applicant is at least 65 years of age. No fee is required.

Accordingly, the above-identified application has been accorded "special" status and will be taken up for action by the examiner upon the completion of all pre-examination processing.

Telephone inquiries concerning this electronic decision should be directed to the Electronic Business Center at 866-217-9197.

All other inquiries concerning either the examination or status of the application should be directed to the Technology Center.

Doc code : PET.OP.AGE
Description : Petition to make special based on Age/Health

PTO/SB/130 (07-09)
Approved for use through 07/31/2012. OMB 0651- 0031
U.S. Patent and Trademark Office; U.S. DEPARTMENT OF COMMERCE
Under the Paperwork Reduction Act of 1995, no persons are required to respond to a collection of information unless it contains a valid OMB control number

PETITION TO MAKE SPECIAL BASED ON AGE FOR ADVANCEMENT OF EXAMINATION UNDER 37 CFR 1.102(c)(1)

Application Information

Application Number	13177098	Confirmation Number	5808	Filing Date	2011-07-06
Attorney Docket Number (optional)	3719U.001	Art Unit	1731	Examiner	Jake Minh Vu
First Named Inventor	Fletcher Eyster				
Title of Invention	Formable Aquatic Coverings For Preventing Biofouling				

Attention: Office of Petitions
An application may be made special for advancement of examination upon filing of a petition showing that the applicant is 65 years of age, or more. No fee is required with such a petition. See 37 CFR 1.102(c)(1) and MPEP 708.02 (IV).

APPLICANT HEREBY PETITIONS TO MAKE SPECIAL FOR ADVANCEMENT OF EXAMINATION IN THIS APPLICATION UNDER 37 CFR 1.102(c)(1) and MPEP 708.02 (IV) ON THE BASIS OF THE APPLICANT'S AGE.

A grantable petition requires one of the following items:
(1) Statement by one named inventor in the application that he/she is 65 years of age, or more; or
(2) Certification by a registered attorney/agent having evidence such as a birth certificate, passport, driver's license, etc. showing one named inventor in the application is 65 years of age, or more.

Name of Inventor who is 65 years of age, or older

Given Name	Middle Name	Family Name	Suffix
Fletcher		Eyster	

A signature of the applicant or representative is required in accordance with 37 CFR 1.33 and 10.18.
Please see 37 CFR 1.4(d) for the format of the signature.

Select (1) or (2) :

○ (1) I am an inventor in this application and I am 65 years of age, or more.

● (2) I am an attorney or agent registered to practice before the Patent and Trademark Office, and I certify that I am in possession of evidence, and will retain such in the application file record, showing that the inventor listed above is 65 years of age, or more.

Signature	/Keith Campbell/	Date (YYYY-MM-DD)	2012-04-04
Name	A. Keith Campbell	Registration Number	52686

PTO/SB/130 (07-09)
Approved for use through 07/31/2012. OMB 0651- 0031
U.S. Patent and Trademark Office; U.S. DEPARTMENT OF COMMERCE
Under the Paperwork Reduction Act of 1995, no persons are required to respond to a collection of information unless it contains a valid OMB control number

Privacy Act Statement

The Privacy Act of 1974 (P.L. 93-579) requires that you be given certain information in connection with your submission of the attached form related to a patent application or patent. Accordingly, pursuant to the requirements of the Act, please be advised that: (1) the general authority for the collection of this information is 35 U.S.C. 2(b)(2); (2) furnishing of the information solicited is voluntary; and (3) the principal purpose for which the information is used by the U.S. Patent and Trademark Office is to process and/or examine your submission related to a patent application or patent. If you do not furnish the requested information, the U.S. Patent and Trademark Office may not be able to process and/or examine your submission, which may result in termination of proceedings or abandonment of the application or expiration of the patent.

The information provided by you in this form will be subject to the following routine uses:

1. The information on this form will be treated confidentially to the extent allowed under the Freedom of Information Act (5 U.S.C. 552) and the Privacy Act (5 U.S.C. 552a). Records from this system of records may be disclosed to the Department of Justice to determine whether the Fr eedom of Information Act requires disclosure of these records.

2. A record from this system of records may be disclosed, as a routine use, in the course of presenting evidence to a court, magistrate, or administrative tribunal, including disclosures to opposing counsel in the course of settlement negotiations.

3. A record in this system of records may be disclosed, as a routine use, to a Member of Congress submitting a request involving an individual, to whom the record pertains, when the individual has requested assistance from the Member with respect to the subject matter of the record.

4. A record in this system of records may be disclosed, as a routine use, to a contractor of the Agency having need for the information in order to perform a contract. Recipients of information shall be required to comply with the requirements of the Privacy Act of 1974, as amended, pursuant to 5 U.S.C. 552a(m).

5. A record related to an International Application filed under the Patent Cooperation Treaty in this system of records may be disclosed, as a routine use, to the International Bureau of the World Intellectual Property Organization, pursuant to the Patent Cooperation Treaty.

6. A record in this system of records may be disclosed, as a routine use, to another federal agency for purposes of National Security review (35 U.S.C. 181) and for review pursuant to the Atomic Energy Act (42 U.S.C. 218(c)).

7. A record from this system of records may be disclosed, as a routine use, to the Administrator, General Services, or his/her designee, during an inspection of records conducted by GSA as part of that agency's responsibility to recommend improvements in records management practices and programs, under authority of 44 U.S.C. 2904 and 2906. Such disclosure shall be made in accordance with the GSA regulations governing inspection of records for this purpose, and any other relevant (i.e., GSA or Commerce) directive. Such disclosure shall not be used to make determinations about indivi duals.

8. A record from this system of records may be disclosed, as a routine use, to the public after either publication of the application pursuant to 35 U.S.C. 122(b) or issuance of a patent pursuant to 35 U.S.C. 151. Further, a record may be disclosed, subject to the limitations of 37 CFR 1.14, as a routine use, to the public if the record was filed in an application which became abandoned or in which the proceedings were terminated and which application is referenced by either a published application, an application open to public inspections or an issued patent.

9. A record from this system of records may be disclosed, as a routine use, to a Federal, State, or local law enforcement agency, if the USPTO becomes aware of a violation or potential violation of law or regulation.

Doc Code: PPH.PCT.652
Document Description: Petition to make special under PCT-Patent Pros Hwy

PTO/SB/20PCT-JP (05-10)
Approved for use through 01/31/2012. OMB 0651-0058
U.S. Patent and Trademark Office; U. S. DEPARTMENT OF COMMERCE
Under the Paperwork Reduction Act of 1995, no persons are required to respond to a collection of information unless it displays a valid OMB control number.

REQUEST FOR PARTICIPATION IN THE PATENT COOPERATION TREATY - PATENT PROSECUTION HIGHWAY (PCT-PPH) PILOT PROGRAM BETWEEN THE JAPAN PATENT OFFICE (JPO) AND THE USPTO

Application No:	13/177,118	Filing date:	July 6, 2011
First Named Inventor:	Tomoki MIZOBUCHI		
Title of the Invention:	3D Video Processor and 3D Video Processing Method		

THIS REQUEST FOR PARTICIPATION IN THE PCT-PPH PILOT PROGRAM ALONG WITH THE REQUIRED DOCUMENTS MUST BE SUBMITTED VIA EFS-WEB. INFORMATION REGARDING EFS-WEB IS AVAILABLE AT HTTP://WWW.USPTO.GOV/EBC/EFS_HELP.HTML

APPLICANT HEREBY REQUESTS PARTICIPATION IN THE PCT-PPH PROGRAM AND PETITIONS TO MAKE THE ABOVE-IDENTIFIED APPLICATION SPECIAL UNDER THE PCT-PPH PROGRAM.

The above-identified application is (1) a national stage entry of the corresponding PCT application, or (2) a national stage entry of another PCT application which claims priority to the corresponding PCT application, or (3) a national application that claims domestic/ foreign priority to the corresponding PCT application, or (4) a national application which forms the basis for the priority claim in the corresponding PCT application, or (5) a continuing application of a U.S. application that satisfies one of (1) to (4) above, or (6) a U.S. application that claims domestic benefit to a U.S. provisional application which forms the basis for the priority claim in the corresponding PCT application.

The corresponding PCT application number(s) is/are: PCT/JP2010/006268

The international date of the corresponding PCT application(s) is/are: October 22, 2010

I. List of Required Documents:

a. **A copy of the latest international work product (WO/ISA, WO/IPEA, or IPER) in the above–identified corresponding PCT application(s)**

☑ Is attached.

☐ Is not attached because the document is already in the U.S. application.

b. **A copy of all claims which were indicated as having novelty, inventive step and industrial applicability in the above-identified corresponding PCT application(s).**

☑ Is attached.

☐ Is not attached because the document is already in the U.S. application.

c. **English translations of the documents in a. and b. above are attached (if the documents are not in the English language). A statement that the English translation is accurate is attached for the document in b. above.**

This collection of information is required by 35 U.S.C. 119, 37 CFR 1.55, and 37 CFR 1.102(d). The information is required to obtain or retain a benefit by the public, which is to file (and by the USPTO to process) an application. Confidentiality is governed by 35 U.S.C. 122 and 37 CFR 1.11 and 1.14. This collection is estimated to take 2 hours to complete, including gathering, preparing, and submitting the completed application form to the USPTO. Time will vary depending upon the individual case. Any comments on the amount of time you require to complete this form and/or suggestions for reducing this burden should be sent to the Chief Information Officer, U.S. Patent and Trademark Office, U.S. Department of Commerce, P.O. Box 1450, Alexandria, VA 22313-1450. DO NOT SEND FEES OR COMPLETED FORMS TO THIS ADDRESS.

Approved for use through 01/31/2012. OMB 0651-0058
U.S.Patent and Trademark Office; U.S. DEPARTMENT OF COMMERCE

Under the Paperwork Reduction Act of 1995, no persons are required to respond to a collection of information unless it displays a valid OMB control number.

REQUEST FOR PARTICIPATION IN THE PCT-PPH PILOT PROGRAM BETWEEN THE JPO AND THE USPTO

(continued)

Application No.:	13/177,118
First Named Inventor:	Tomoki MIZOBUCHI

d. **(1) An information disclosure statement listing the documents cited in the international work products (ISR, WO/ISA, WO/IPEA, IPER) of the corresponding PCT application.**

☑ Is attached

☐ Has already been filed in the above-identified U.S. application on _____

(2) Copies of all documents (except) for U.S. patents or U.S. patent application publications)

☑ Are attached.

☐ Have already been filed in the above-identified U.S. application on _____

II. Claims Correspondence Table:

Claims in US Application	Patentable Claims in the corresponding PCT Application	Explanation regarding the correspondence
1-18	1-18	Claims 1-18 in the filed U.S. Application correspond to claims 1-18, respectively, in the corresponding PCT application.
		Each claim has been amended to improve clarity, grammar and syntax, to utilize proper claim format, as well as to eliminate language informalities.
		Additionally, claims 1-18 have been amended to eliminate potential means-plus-function claim language, antecedent basis issues, and ambiguities.
		Claims 15-18 have also been amended to place the claims in better compliance with traditional U.S. claim drafting principles.

III. All the claims in the US application sufficiently correspond to the patentable claims in the corresponding PCT application.

Signature	William Pieprz	Date 9-1-11
Name (Print/Typed)	Reg. No. 33630	Registration Number

Privacy Act Statement

The **Privacy Act of 1974 (P.L. 93-579)** requires that you be given certain information in connection with your submission of the attached form related to a patent application or patent. Accordingly, pursuant to the requirements of the Act, please be advised that: (1) the general authority for the collection of this information is 35 U.S.C. 2(b)(2); (2) furnishing of the information solicited is voluntary; and (3) the principal purpose for which the information is used by the U.S. Patent and Trademark Office is to process and/or examine your submission related to a patent application or patent. If you do not furnish the requested information, the U.S. Patent and Trademark Office may not be able to process and/or examine your submission, which may result in termination of proceedings or abandonment of the application or expiration of the patent.

The information provided by you in this form will be subject to the following routine uses:

1. The information on this form will be treated confidentially to the extent allowed under the Freedom of Information Act (5 U.S.C. 552) and the Privacy Act (5 U.S.C 552a). Records from this system of records may be disclosed to the Department of Justice to determine whether disclosure of these records is required by the Freedom of Information Act.
2. A record from this system of records may be disclosed, as a routine use, in the course of presenting evidence to a court, magistrate, or administrative tribunal, including disclosures to opposing counsel in the course of settlement negotiations.
3. A record in this system of records may be disclosed, as a routine use, to a Member of Congress submitting a request involving an individual, to whom the record pertains, when the individual has requested assistance from the Member with respect to the subject matter of the record.
4. A record in this system of records may be disclosed, as a routine use, to a contractor of the Agency having need for the information in order to perform a contract. Recipients of information shall be required to comply with the requirements of the Privacy Act of 1974, as amended, pursuant to 5 U.S.C. 552a(m).
5. A record related to an International Application filed under the Patent Cooperation Treaty in this system of records may be disclosed, as a routine use, to the International Bureau of the World Intellectual Property Organization, pursuant to the Patent Cooperation Treaty.
6. A record in this system of records may be disclosed, as a routine use, to another federal agency for purposes of National Security review (35 U.S.C. 181) and for review pursuant to the Atomic Energy Act (42 U.S.C. 218(c)).
7. A record from this system of records may be disclosed, as a routine use, to the Administrator, General Services, or his/her designee, during an inspection of records conducted by GSA as part of that agency's responsibility to recommend improvements in records management practices and programs, under authority of 44 U.S.C. 2904 and 2906. Such disclosure shall be made in accordance with the GSA regulations governing inspection of records for this purpose, and any other relevant (*i.e.*, GSA or Commerce) directive. Such disclosure shall not be used to make determinations about individuals.
8. A record from this system of records may be disclosed, as a routine use, to the public after either publication of the application pursuant to 35 U.S.C. 122(b) or issuance of a patent pursuant to 35 U.S.C. 151. Further, a record may be disclosed, subject to the limitations of 37 CFR 1.14, as a routine use, to the public if the record was filed in an application which became abandoned or in which the proceedings were terminated and which application is referenced by either a published application, an application open to public inspection or an issued patent.
9. A record from this system of records may be disclosed, as a routine use, to a Federal, State, or local law enforcement agency, if the USPTO becomes aware of a violation or potential violation of law or regulation.

P40463.A03

IN THE UNITED STATES PATENT AND TRADEMARK OFFICE

Applicants	: Tomoki MIZOBUCHI et al.	Art Unit	: 2872
Appl. No.	: 13/177,118 (Continuation of PCT/JP2010/006268)	Examiner	: Not yet assigned
I.A. Filed	: October 22, 2010	Conf. No.	: 5837
For	: 3D VIDEO PROCESSOR AND 3D VIDEO PROCESSING METHOD		

COVER LETTER

Commissioner for Patents
U.S. Patent and Trademark Office
Customer Service Window, Mail Stop PPH
Randolph Building
401 Dulany Street
Alexandria VA 22314

Sir:

In support of the concurrently filed Request for Participation in the Patent Cooperation Treaty - Patent Prosecution Highway (PCT-PPH) Program between the Japan Patent Office (JPO) and the USPTO, Applicants bring the following information to the attention of the U.S. Patent and Trademark Office:

1. The present US application is a continuation of International Application No. PCT/JP2010/006268, which contains the claims indicated as having novelty, inventive step, and industrial applicability.

2. The Written Opinion of the International Searching Authority does not include any observation described in Box VIII, and thus, Applicants do not identify and explain why the claim(s) is/are not subject to an observation described in Box VIII. A copy of

the Written Opinion of the International Searching Authority and an English language translation thereof are provided herewith.

If there should be any questions concerning this application, the Examiner is invited to contact the undersigned at the telephone number listed below.

Respectfully submitted,
Tomoki MIZOBUCHI et al.

Bruce H. Bernstein
Reg. No. 29027

William Pieprz
Reg. No. 33630

September 01, 2011
GREENBLUM & BERNSTEIN, P.L.C.
1950 Roland Clarke Place
Reston, VA 20191
(703) 716-1191

IN THE UNITED STATES PATENT AND TRADEMARK OFFICE

In re Application of

Serial NO.:
Filing Date:
For: 3D VIDEO PROCESSOR AND 3D VIDEO PROCESSING METHOD

VERIFICATION OF TRANSLATION

Honorable Commissioner of Patents and Trademarks
Washington, D.C. 20231

Sir:

Sachiko TAKAGI residing at 1-18-16, Senriyamanishi, Suita-shi, Osaka, 565-0851 Japan declares:

(1) that she knows well both the Japanese and English languages;

(2) that she translated the patentable claims from PCT/JP2010/006268 from Japanese to English;

(3) that the attached English translation is an accurate translation of the patentable claims from PCT/JP2010/006268 to the best of her knowledge and belief; and

(4) that all statements made of her own knowledge are true and that all statements made on information and belief are believed to be true, and further that these statements are made with the knowledge that willful false statements and the like are punishable by fine or imprisonment, or both, under 18 U.S.C. 1001, and that such false statements may jeopardize the validity of the application or any patent thereon.

This 5th day of July, 2011

Sachiko Takagi

Sachiko TAKAGI

What is claimed is:

1. A three-dimensional (3D) video processor that outputs a left-eye object image and a right-eye object image which have parallax and are to be superimposed on main video, said 3D video processor comprising:

a first image processing unit configured to perform image output preparation of a first image and output the first image, the first image being one of the left-eye object image and the right-eye object image;

a second image processing unit configured to perform image output preparation of a second image and output the second image, the second image being an other one of the left-eye object image and the right-eye object image; and

an image output control unit configured to control said first image processing unit and said second image processing unit so that the first image and the second image are synchronously outputted,

wherein said first image processing unit includes

a first determination unit configured to determine whether or not the image output preparation of the first image is completed,

said second image processing unit includes

a second determination unit configured to determine whether or not the image output preparation of the second image is completed, and

said image output control unit is configured to instruct said first image processing unit and said second image processing unit to skip the output of both the first image and the second image, when one of said first determination unit and said second determination unit determines that the image output preparation of a corresponding one of the first image and the second image is not completed.

2. The 3D video processor according to Claim 1,

wherein said first image processing unit includes a first plane memory, and is configured to perform the image output preparation by rendering the first image on said first plane memory using a first header that includes attribute information of the first image,

said second image processing unit includes a second plane memory, and is configured to perform the image output preparation by rendering the second image on said second plane memory using a second header that includes attribute information of the second image,

said first determination unit is configured to determine that the image output preparation of the first image is not completed, when an error occurs in the first header, and

said second determination unit is configured to determine that the image output preparation of the second image is not completed, when an error occurs in the second header.

3. The 3D video processor according to Claim 2,

wherein said first determination unit is configured to determine that the image output preparation of the first image is not completed, when the first header does not conform to a predetermined specification, and

said second determination unit is configured to determine that the image output preparation of the second image is not completed, when the second header does not conform to the predetermined specification.

4. The 3D video processor according to Claim 2,

wherein said first image processing unit is configured to output, instead of the first image, first erasure data for erasing an image that remains rendered on said first plane memory, when skipping the output of the first image, and

said second image processing unit is configured to output, instead of the second image, second erasure data for erasing an image that remains rendered on said second plane memory, when skipping the output of the second image.

5. The 3D video processor according to Claim 2,

wherein said first image processing unit is configured to output an image that remains rendered on said first plane memory, when

skipping the output of the first image, and

said second image processing unit is configured to output an image that remains rendered on said second plane memory, when skipping the output of the second image.

6. The 3D video processor according to Claim 1,

wherein said first determination unit is configured to, when determining that the image output preparation of the first image is completed, issue a first completion notification to said image output control unit, the first completion notification indicating that the image output preparation of the first image is completed,

said second determination unit is configured to, when determining that the image output preparation of the second image is completed, issue a second completion notification to said image output control unit, the second completion notification indicating that the image output preparation of the second image is completed, and

said image output control unit is configured to instruct said first image processing unit and said second image processing unit to skip the output of both the first image and the second image, when said image output control unit does not receive one of the first completion notification and the second completion notification by a predetermined time.

7. The 3D video processor according to Claim 6,

wherein, when said image output control unit does not receive the one of the first completion notification and the second completion notification, said image output control unit is configured to: instruct said first image processing unit and said second image processing unit to output the first image and the second image, when said image output control unit receives the one of the first completion notification and the second completion notification during a time that a remaining period up to output of a next left-eye object image and a next right-eye object image is longer than a predetermined threshold; and instruct said first image processing unit and said second image processing unit to skip the output of both the first image and the

second image, when said image output control unit does not receive the one of the first completion notification and the second completion notification until the remaining period reaches the predetermined threshold.

8. The 3D video processor according to Claim 7,

wherein the remaining period is half a period during which one left-eye object image or one right-eye object image is to be outputted.

9. The 3D video processor according to Claim 1,

wherein the left-eye object image and the right-eye object image are each a subtitle, a symbol, a figure, or a menu image.

10. A 3D video processor that outputs a left-eye object image and a right-eye object image which have parallax and are to be superimposed on main video, said 3D video processor comprising:

a first image processing unit configured to perform image output preparation of a first image and output the first image, the first image being one of the left-eye object image and the right-eye object image;

a second image processing unit configured to perform image output preparation of a second image and output the second image, the second image being an other one of the left-eye object image and the right-eye object image; and

an image output control unit configured to control said first image processing unit and said second image processing unit so that the first image and the second image are synchronously outputted,

wherein said first image processing unit includes

a first determination unit configured to determine whether or not the image output preparation of the first image is completed,

said second image processing unit includes

a second determination unit configured to determine whether or not the image output preparation of the second image is completed, and

said image output control unit is configured to instruct said first

image processing unit to output a predetermined complementary image as the first image, when said first determination unit determines that the image output preparation of the first image is not completed and said second determination unit determines that the image output preparation of the second image is completed.

11. The 3D video processor according to Claim 10,

wherein said first image processing unit includes a first plane memory, and is configured to perform the image output preparation by rendering the first image on said first plane memory using a first header that includes attribute information of the first image,

said second image processing unit includes a second plane memory, and is configured to perform the image output preparation by rendering the second image on said second plane memory using a second header that includes attribute information of the second image,

said first determination unit is configured to determine that the image output preparation of the first image is not completed, when an error occurs in the first header,

said 3D video processor further comprises

a header complementing unit configured to, when said first determination unit determines that the error occurs in the first header, obtain the second header from said second image processing unit, the second header including the same attribute information as the attribute information included in the first header, and

said first image processing unit is configured to, when said first determination unit determines that the image output preparation of the first image is not completed, render the complementary image on said first plane memory using the second header obtained by said header complementing unit, and output the rendered complementary image as the first image.

12. The 3D video processor according to Claim 11,

wherein said first determination unit is configured to determine that the error occurs in the first header, when the first header does not

conform to a predetermined specification.

13. The 3D video processor according to Claim 10,

wherein said first determination unit is configured to, when determining that the image output preparation of the first image is completed, issue a first completion notification to said image output control unit, the first completion notification indicating that the image output preparation of the first image is completed,

said second determination unit is configured to, when determining that the image output preparation of the second image is completed, issue a second completion notification to said image output control unit, the second completion notification indicating that the image output preparation of the second image is completed, and

said image output control unit is configured to instruct said first image processing unit to output, as the first image, the complementary image that is the second image, when said image output control unit, after receiving the second completion notification, does not receive the first completion notification by a predetermined time.

14. The 3D video processor according to Claim 13,

wherein said image output control unit is further configured to determine whether or not the first image or the second image is erasure data for erasing a preceding image that remains rendered, and

said image output control unit is configured to instruct said first image processing unit to output, as the first image, the erasure data that is the second image, when said image output control unit, after receiving the second completion notification, does not receive the first completion notification by the predetermined time and also determines that the second image is the erasure data.

15. A 3D video processing method of outputting a left-eye object image and a right-eye object image which have parallax and are to be superimposed on main video, said 3D video processing method

comprising:

performing image output preparation of a first image and outputting the first image, the first image being one of the left-eye object image and the right-eye object image;

performing image output preparation of a second image and outputting the second image, the second image being an other one of the left-eye object image and the right-eye object image; and

controlling so that the first image and the second image are synchronously outputted,

wherein said performing image output preparation of a first image includes

determining whether or not the image output preparation of the first image is completed,

said performing image output preparation of a second image includes

determining whether or not the image output preparation of the second image is completed, and

said controlling includes

skipping the output of both the first image and the second image, when one of said determining whether or not the image output preparation of the first image is completed and said determining whether or not the image output preparation of the second image is completed determines that the image output preparation of a corresponding one of the first image and the second image is not completed.

16. A 3D video processing method of outputting a left-eye object image and a right-eye object image which have parallax and are to be superimposed on main video, said 3D video processing method comprising:

performing image output preparation of a first image and outputting the first image, the first image being one of the left-eye object image and the right-eye object image;

performing image output preparation of a second image and outputting the second image, the second image being an other one of

the left-eye object image and the right-eye object image; and

controlling so that the first image and the second image are synchronously outputted,

wherein said performing image output preparation of a first image includes

determining whether or not the image output preparation of the first image is completed,

said performing image output preparation of a second image includes

determining whether or not the image output preparation of the second image is completed, and

said controlling includes

outputting a predetermined complementary image as the first image, when said determining whether or not the image output preparation of the first image is completed determines that the image output preparation of the first image is not completed and said determining whether or not the image output preparation of the second image is completed determines that the image output preparation of the second image is completed.

17. A non-transitory computer-readable recording medium having a computer program recorded thereon for causing a computer to execute a 3D video processing method of outputting a left-eye object image and a right-eye object image which have parallax and are to be superimposed on main video, the computer program causing the computer to execute:

performing image output preparation of a first image and outputting the first image, the first image being one of the left-eye object image and the right-eye object image;

performing image output preparation of a second image and outputting the second image, the second image being an other one of the left-eye object image and the right-eye object image; and

controlling so that the first image and the second image are synchronously outputted,

wherein said performing image output preparation of a first

image includes

determining whether or not the image output preparation of the first image is completed,

said performing image output preparation of a second image includes

determining whether or not the image output preparation of the second image is completed, and

said controlling includes

skipping the output of both the first image and the second image, when one of said determining whether or not the image output preparation of the first image is completed and said determining whether or not the image output preparation of the second image is completed determines that the image output preparation of a corresponding one of the first image and the second image is not completed.

18. A non-transitory computer-readable recording medium having a computer program recorded thereon for causing a computer to execute a 3D video processing method of outputting a left-eye object image and a right-eye object image which have parallax and are to be superimposed on main video, the computer program causing the computer to execute:

performing image output preparation of a first image and outputting the first image, the first image being one of the left-eye object image and the right-eye object image;

performing image output preparation of a second image and outputting the second image, the second image being an other one of the left-eye object image and the right-eye object image; and

controlling so that the first image and the second image are synchronously outputted,

wherein said performing image output preparation of a first image includes

determining whether or not the image output preparation of the first image is completed,

said performing image output preparation of a second image

includes

determining whether or not the image output preparation of the second image is completed, and

said controlling includes

outputting a predetermined complementary image as the first image, when said determining whether or not the image output preparation of the first image is completed determines that the image output preparation of the first image is not completed and said determining whether or not the image output preparation of the second image is completed determines that the image output preparation of the second image is completed.

請求の範囲

[請求項1] 視差を有する、主映像に重畳される左眼用オブジェクト画像と右眼用オブジェクト画像とを出画する三次元映像処理装置であって、

前記左眼用オブジェクト画像及び前記右眼用オブジェクト画像の一方である第１画像の出画準備を行って出画する第１画像処理部と、

前記左眼用オブジェクト画像及び前記右眼用オブジェクト画像の他方である第２画像の出画準備を行って出画する第２画像処理部と、

前記第１画像と前記第２画像とを同期させて出画するように、前記第１画像処理部と前記第２画像処理部とを制御する出画制御部とを備え、

前記第１画像処理部は、

前記第１画像の出画準備が完了しているか否かを判定する第１判定部を備え、

前記第２画像処理部は、

前記第２画像の出画準備が完了しているか否かを判定する第２判定部を備え、

前記出画制御部は、

前記第１判定部及び前記第２判定部の一方によって、前記第１画像及び前記第２画像の一方の出画準備が完了していないと判定された場合、前記第１画像及び前記第２画像の双方の出画をスキップさせる

三次元映像処理装置。

[請求項2] 前記第１画像処理部は、第１プレーンメモリを有し、前記第１画像の属性情報を含む第１ヘッダを用いて、前記第１画像を前記第１プレーンメモリに描画することで出画準備を行い、

前記第２画像処理部は、第２プレーンメモリを有し、前記第２画像の属性情報を含む第２ヘッダを用いて、前記第２画像を前記第２プレーンメモリに描画することで出画準備を行い、

前記第１判定部は、前記第１ヘッダにエラーが発生した場合に、前

記第１画像の出画準備が完了していないと判定し、

前記第２判定部は、前記第２ヘッダにエラーが発生した場合に、前記第２画像の出画準備が完了していないと判定する

請求項１記載の三次元映像処理装置。

[請求項3] 前記第１判定部は、前記第１ヘッダが予め定められた規格に従っていない場合に、前記第１画像の出画準備が完了していないと判定し、

前記第２判定部は、前記第２ヘッダが前記規格に従っていない場合に、前記第２画像の出画準備が完了していないと判定する

請求項２記載の三次元映像処理装置。

[請求項4] 前記第１画像処理部は、前記第１画像の出画をスキップする場合、前記第１プレーンメモリに描画されたままの画像を消去するための第１消去用データを前記第１画像の代わりに出画し、

前記第２画像処理部は、前記第２画像の出画をスキップする場合、前記第２プレーンメモリに描画されたままの画像を消去するための第２消去用データを前記第２画像の代わりに出画する

請求項２記載の三次元映像処理装置。

[請求項5] 前記第１画像処理部は、前記第１画像の出画をスキップする場合、前記第１プレーンメモリに描画されたままの第１画像を出画し、

前記第２画像処理部は、前記第２画像の出画をスキップする場合、前記第２プレーンメモリに描画されたままの第２画像を出画する

請求項２記載の三次元映像処理装置。

[請求項6] 前記第１判定部は、前記第１画像の出画準備が完了したと判定した場合に、前記第１画像の出画準備が完了したことを示す第１完了通知を前記出画制御部に通知し、

前記第２判定部は、前記第２画像の出画準備が完了したと判定した場合に、前記第２画像の出画準備が完了したことを示す第２完了通知を前記出画制御部に通知し、

前記出画制御部は、前記第１完了通知及び前記第２完了通知の一方

が所定の時刻までに通知されていない場合に、前記第１画像及び前記第２画像の双方の出画をスキップさせる

請求項１記載の三次元映像処理装置。

[請求項7] 前記出画制御部は、現在の前記第１完了通知及び現在の前記第２完了通知の一方が通知されていない場合であって、かつ、次の左眼用オブジェクト画像及び次の右眼用オブジェクト画像が出画されるまでの期間である残り期間が所定の閾値より大きい期間内に、現在の前記第１完了通知及び現在の前記第２完了通知の一方を受け取った場合は、現在の前記第１画像及び現在の前記第２画像を出画させ、前記残り期間が前記閾値に達した際に、現在の前記第１完了通知及び現在の前記第２完了通知の一方を受け取らなかった場合、現在の前記第１画像及び現在の前記第２画像の双方の出画をスキップさせる

請求項６記載の三次元映像処理装置。

[請求項8] 前記残り期間は、１枚の左眼用オブジェクト画像又は右眼用オブジェクト画像を出画すべき期間の半分である

請求項７記載の三次元映像処理装置。

[請求項9] 前記左眼用オブジェクト画像及び前記右眼用オブジェクト画像は、字幕、記号、図形又はメニュー画像である

請求項１記載の三次元映像処理装置。

[請求項10] 視差を有する、主映像に重畳される左眼用オブジェクト画像と右眼用オブジェクト画像とを出画する三次元映像処理装置であって、

前記左眼用オブジェクト画像及び前記右眼用オブジェクト画像の一方である第１画像の出画準備を行って出画する第１画像処理部と、

前記左眼用オブジェクト画像及び前記右眼用オブジェクト画像の他方である第２画像の出画準備を行って出画する第２画像処理部と、

前記第１画像と前記第２画像とを同期させて出画するように、前記第１画像処理部と前記第２画像処理部とを制御する出画制御部とを備え、

前記第１画像処理部は、

前記第１画像の出画準備が完了しているか否かを判定する第１判定部を備え、

前記第２画像処理部は、

前記第２画像の出画準備が完了しているか否かを判定する第２判定部を備え、

前記出画制御部は、

前記第１判定部によって、前記第１画像の出画準備が完了していないと判定され、かつ、前記第２判定部によって、前記第２画像の出画準備が完了していると判定された場合、所定の補完画像を前記第１画像として出画させる

三次元映像処理装置。

[請求項11] 前記第１画像処理部は、第１プレーンメモリを有し、前記第１画像の属性情報を含む第１ヘッダを用いて、前記第１画像を前記第１プレーンメモリに描画することで出画準備を行い、

前記第２画像処理部は、第２プレーンメモリを有し、前記第２画像の属性情報を含む第２ヘッダを用いて、前記第２画像を前記第２プレーンメモリに描画することで出画準備を行い、

前記第１判定部は、前記第１ヘッダにエラーが発生した場合に、前記第１画像の出画準備が完了していないと判定し、

前記三次元映像処理装置は、さらに、

前記第１判定部によって、前記第１ヘッダにエラーが発生した場合に、前記第１ヘッダが含む属性情報と同じ属性情報を含む前記第２ヘッダを前記第２画像処理部から取得するヘッダ補完部を備え、

前記第１画像処理部は、

前記第１画像の出画準備が完了していないと判定された場合、前記ヘッダ補完部によって取得された第２ヘッダを用いて前記補完画像を前記第１プレーンメモリに描画し、描画した補完画像を前記第１画像

として出画する

請求項１０記載の三次元映像処理装置。

[請求項12] 前記第１判定部は、前記第１ヘッダが予め定められた規格に従っていない場合に、前記第１ヘッダにエラーが発生したと判定する

請求項１１記載の三次元映像処理装置。

[請求項13] 前記第１判定部は、前記第１画像の出画準備が完了したと判定した場合に、前記第１画像の出画準備が完了したことを示す第１完了通知を前記出画制御部に通知し、

前記第２判定部は、前記第２画像の出画準備が完了したと判定した場合に、前記第２画像の出画準備が完了したことを示す第２完了通知を前記出画制御部に通知し、

前記出画制御部は、前記第２完了通知を受けた後、前記第１完了通知が所定の時刻までに通知されていない場合に、前記第２画像である補完画像を前記第１画像として出画させる

請求項１０記載の三次元映像処理装置。

[請求項14] 前記出画制御部は、さらに、前記第１画像又は前記第２画像が、以前に描画された画像を消去するための消去用データであるか否かを判定し、

前記出画制御部は、前記第２完了通知を受けた後、前記第１完了通知が前記所定の時刻までに通知されておらず、さらに、前記第２画像が前記消去用データであると判定した場合に、前記第２画像である前記消去用データを前記第１画像として出画させる

請求項１３記載の三次元映像処理装置。

[請求項15] 視差を有する、主映像に重畳される左眼用オブジェクト画像と右眼用オブジェクト画像とを出画する三次元映像処理方法であって、

前記左眼用オブジェクト画像及び前記右眼用オブジェクト画像の一方である第１画像の出画準備を行って出画する第１画像処理ステップと、

前記左眼用オブジェクト画像及び前記右眼用オブジェクト画像の他方である第２画像の出画準備を行って出画する第２画像処理ステップと、

前記第１画像と前記第２画像とを同期させて出画を制御する出画制御ステップとを含み、

前記第１画像処理ステップは、

前記第１画像の出画準備が完了しているか否かを判定する第１判定ステップを含み、

前記第２画像処理ステップは、

前記第２画像の出画準備が完了しているか否かを判定する第２判定ステップを含み、

前記出画制御ステップでは、

前記第１判定ステップ及び前記第２判定ステップの一方において、前記第１画像及び前記第２画像の一方の出画準備が完了していないと判定された場合、前記第１画像及び前記第２画像の双方の出画をスキップさせる

三次元映像処理方法。

[請求項16] 視差を有する、主映像に重畳される左眼用オブジェクト画像と右眼用オブジェクト画像とを出画する三次元映像処理方法であって、

前記左眼用オブジェクト画像及び前記右眼用オブジェクト画像の一方である第１画像の出画準備を行って出画する第１画像処理ステップと、

前記左眼用オブジェクト画像及び前記右眼用オブジェクト画像の他方である第２画像の出画準備を行って出画する第２画像処理ステップと、

前記第１画像と前記第２画像とを同期させて出画を制御する出画制御ステップとを含み、

前記第１画像処理ステップは、

前記第１画像の出画準備が完了しているか否かを判定する第１判定ステップを含み、

前記第２画像処理ステップは、

前記第２画像の出画準備が完了しているか否かを判定する第２判定ステップを含み、

前記出画制御ステップは、

前記第１判定ステップにおいて、前記第１画像の出画準備が完了していないと判定され、かつ、前記第２判定ステップにおいて、前記第２画像の出画準備が完了していると判定された場合、所定の補完画像を前記第１画像として出画させる

三次元映像処理方法。

[請求項17] 視差を有する、主映像に重畳される左眼用オブジェクト画像と右眼用オブジェクト画像とを出画する三次元映像処理方法をコンピュータに実行させるプログラムを格納する非一時的なコンピュータ読み取り可能な記録媒体であって、

前記左眼用オブジェクト画像及び前記右眼用オブジェクト画像の一方である第１画像の出画準備を行って出画する第１画像処理ステップと、

前記左眼用オブジェクト画像及び前記右眼用オブジェクト画像の他方である第２画像の出画準備を行って出画する第２画像処理ステップと、

前記第１画像と前記第２画像とを同期させて出画を制御する出画制御ステップとを含み、

前記第１画像処理ステップは、

前記第１画像の出画準備が完了しているか否かを判定する第１判定ステップを含み、

前記第２画像処理ステップは、

前記第２画像の出画準備が完了しているか否かを判定する第２判定

ステップを含み、

前記出画制御ステップでは、

前記第１判定ステップ及び前記第２判定ステップの一方において、前記第１画像及び前記第２画像の一方の出画準備が完了していないと判定された場合、前記第１画像及び前記第２画像の双方の出画をスキップさせる

記録媒体。

[請求項18] 視差を有する、主映像に重畳される左眼用オブジェクト画像と右眼用オブジェクト画像とを出画する三次元映像処理方法をコンピュータに実行させるプログラムを格納する非一時的なコンピュータ読み取り可能な記録媒体であって、

前記左眼用オブジェクト画像及び前記右眼用オブジェクト画像の一方である第１画像の出画準備を行って出画する第１画像処理ステップと、

前記左眼用オブジェクト画像及び前記右眼用オブジェクト画像の他方である第２画像の出画準備を行って出画する第２画像処理ステップと、

前記第１画像と前記第２画像とを同期させて出画を制御する出画制御ステップとを含み、

前記第１画像処理ステップは、

前記第１画像の出画準備が完了しているか否かを判定する第１判定ステップを含み、

前記第２画像処理ステップは、

前記第２画像の出画準備が完了しているか否かを判定する第２判定ステップを含み、

前記出画制御ステップは、

前記第１判定ステップにおいて、前記第１画像の出画準備が完了していないと判定され、かつ、前記第２判定ステップにおいて、前記第

２画像の出画準備が完了していると判定された場合、所定の補完画像を前記第１画像として出画させる

記録媒体。

WRITTEN OPINION OF THE INTERNATIONAL SEARCHING AUTHORITY

International application No.
PCT/JP2010/006268

Box No. V Reasoned statement under Rule 43*bis*. 1(a)(i) with regard to novelty, inventive step and industrial applicability; citations and explanations supporting such statement

1. Statement

Novelty (N)	Claims	1 - 18	Yes
	Claims		No
Inventive step (IS)	Claims	1 - 18	Yes
	Claims		No
Industrial applicability (IA)	Claims	1 - 18	Yes
	Claims		No

2. Citations and explanations

Document 1: JP 2003-319419 A (Sharp Corporation), November 7, 2003, full text, all drawings
Document 2: JP 2004-274125 A (Sony Corporation), September 30, 2004, full text, all drawings
Document 3: JP 11-289555 A (Toshiba Corporation), October 19, 1999, full text, all drawings
Document 4: JP 2005-236925 A (Victor Company of Japan, Limited), September 2, 2005, full text, all drawings

The invention claimed in Claims 1 - 18 is not disclosed by the documents cited in this International Search Report, and therefore is not obvious to any person skilled in the art.

国際調査機関の見解書

国際出願番号　ＰＣＴ／ＪＰ２０１０／００６２６８

第Ⅴ欄　新規性、進歩性又は産業上の利用可能性についてのＰＣＴ規則43の2.1(a)(i)に定める見解、それを裏付ける文献及び説明

1．　見解

新規性（N）	請求項	1－18	有
	請求項		無
進歩性（ＩＳ）	請求項	1－18	有
	請求項		無
産業上の利用可能性（ＩＡ）	請求項	1－18	有
	請求項		無

2．　文献及び説明

文献１：JP 2003-319419 A（シャープ株式会社）2003.11.07，全文，全図
文献２：JP 2004-274125 A（ソニー株式会社）2004.09.30，全文，全図
文献３：JP 11-289555 A（株式会社東芝）1999.10.19，全文，全図
文献４：JP 2005-236925 A（日本ビクター株式会社）2005.09.02，全文，全図

請求項１－１８に係る発明は、国際調査報告に引用されたいずれの文献にも記載されておらず、当業者にとって自明なものでもない。

UNITED STATES PATENT AND TRADEMARK OFFICE

UNITED STATES DEPARTMENT OF COMMERCE
United States Patent and Trademark Office
Address: COMMISSIONER FOR PATENTS
P.O. Box 1450
Alexandria, Virginia 22313-1450
www.uspto.gov

APPLICATION NO.	FILING DATE	FIRST NAMED INVENTOR	ATTORNEY DOCKET NO.	CONFIRMATION NO.
13/177,118	07/06/2011	Tomoki MIZOBUCHI	P40463	5837

52123 7590 09/15/2011

GREENBLUM & BERNSTEIN, P.L.C.
1950 ROLAND CLARKE PLACE
RESTON, VA 20191

EXAMINER	
ART UNIT	PAPER NUMBER
2482	

NOTIFICATION DATE	DELIVERY MODE
09/15/2011	ELECTRONIC

Please find below and/or attached an Office communication concerning this application or proceeding.

The time period for reply, if any, is set in the attached communication.

Notice of the Office communication was sent electronically on above-indicated "Notification Date" to the following e-mail address(es):

gbpatent@gbpatent.com
pto@gbpatent.com

MAILED

SEP 14 2011

DIRECTOR OFFICE
TECHNOLOGY CENTER 2400

UNITED STATES PATENT AND TRADEMARK OFFICE

Commissioner for Patents
United States Patent and Trademark Office
P.O. Box 1450
Alexandria, VA 22313-1450
www.uspto.gov

William Pieprz
GREENBLUM & BERNSTEIN, P.L.C.
1950 ROLAND CLARKE PLACE
RESTON, VA 20191

In re Application of: MIZOBUCHI, T. et al.
Application No.: **13/177,118**
Filed: July 6, 2011
For: 3D PROCESSOR AND 3D VIDEO PROCESSING METHOD

DECISION ON REQUEST TO PARTICIPATE IN PATENT PROSECUTION HIGHWAY PROGRAM AND PETITION TO MAKE SPECIAL UNDER 37 CFR §1.102(a)

This is a decision on the request to participate in the PCT-Patent Prosecution Highway (PPH) pilot program and the petition under 37 CFR §1.102(a), filed **September 1, 2011**, to make the above-identified application special.

The petition is **GRANTED.**

A grantable request to participate in the PCT PPH program and petition to make special require:

(1) The relationship between the corresponding U.S. application for which participation in the PCT-PPH pilot program is requested and the PCT application satisfies one of the following:

(a) The U.S. application is a national stage entry of the corresponding PCT application.

(b)The U.S. application is a national application which forms the basis for the priority claim in the corresponding PCT application.

(c) The U.S. application is a national stage entry of another PCT application (which can be filed in any competent receiving office) which claims priority to the corresponding PCT application.

(d) The U.S. application is a national application claiming foreign/domestic priority to the corresponding PCT application.

(e) The U.S. application is a continuing application (continuation, divisional, or continuation-in-part) of the U.S. application which satisfies one of the above (a) to (d) scenarios.

(2) The latest work product in the international phase of the PCT application corresponding to the U.S. application indicates at least one claim in the PCT application has novelty, inventive step and industrial applicability. In case any observation is described in Box VIII of the WO/ISA, or WO/IPEA, or IPER which forms the basis for the PCT-PPH request, applicant must identify and explain why the claim(s) is/are not subject to any observation described in Box VIII irrespective of whether an amendment is submitted to correct the observation described in Box VIII.

(3) All the claims in each U.S. application for which a request for participation in the PCT-PPH pilot program is made must sufficiently correspond to or be amended to sufficiently correspond to one or more of those claims indicated as having novelty, inventive step and industrial applicability and free of any observation described in Box VIII in the latest work product of the corresponding PCT application.

(4) Substantive examination of the U.S. application for which participation in the PCT-PPH pilot program is requested has not begun.

(5) Applicant must submit a copy of the latest international work product which indicated that the claim(s) has/have novelty, inventive step and industrial applicability along with an English translation thereof if the copy of the latest international work product is not in the English language.

(6) Applicant must submit a copy of the claims from the corresponding PCT application which were indicated as having novelty, inventive step and industrial applicability in the latest work product of the PCT application along with an English translation thereof and a statement that the English translation is accurate if the claims are not in the English language.

(7) Applicant is required to submit a claims correspondence table in English. The claims correspondence table must indicate how all the claims in the U.S. application sufficiently correspond to the claims indicated as having novelty, inventive step and industrial applicability in the latest international work product.

(8) Applicant must submit an information disclosure statement (IDS) listing the documents cited in the international work products (ISR, WOIISA, WOIIPEA, PER) of the PCT.

(9) The request for participation in the PCT-PPH pilot program and all the supporting documents must be submitted to the USPTO via EFS-Web and indexed with the following document description: "Petition to make special under PCT-Patent Pros Hwy. Any preliminary amendments and IDS submitted with the PCT-PPH documents must be separately indexed as a preliminary amendment and IDS, respectively.

The request to participate in the PPH program and petition are found to comply with all the above requirements. Accordingly, the above-identified application has been accorded **"special"** status.

Accordingly, the petition is **GRANTED**.

The application is being forwarded to the examiner for action on the merits commensurate with this decision.

Telephone inquiries concerning this decision should be directed to Beatriz Prieto at 571-272-3902. A second point of contact is Hassan Kizou at 571-272-3088. All other inquiries concerning the examination or status of the application is accessible in the PAIR system at http://www.uspto.gov/ebc/index.html.

/Beatriz Prieto/

Beatriz Prieto, Quality Assurance Specialist
Technology Center 2400

UNITED STATES PATENT AND TRADEMARK OFFICE

Commissioner for Patents
United States Patent and Trademark Office
P.O. Box 1450
Alexandria, VA 22313-1450
www.uspto.gov

LAW OFFICE OF ROBERT E. KASODY
PROFESSIONAL CORP., SUITE 500
6601 CENTER DRIVE WEST
LOS ANGELES, CA 90045

MAILED

OCT 03 2011

OFFICE OF PETITIONS

In re Application of :
Michael L. Beydler et al :
Application No. 13/177,154 : DECISION ON PETITION
Filed: July 6, 2011 : TO WITHDRAW
Attorney Docket No. APA.002A : FROM RECORD

This is a decision on the Request to Withdraw as attorney or agent of record under 37 C.F.R. § 1.36(b), filed September 24, 2011.

The request is **APPROVED**.

The request was signed by Robert E. Kasody on behalf of the practitioners of record associated with Customer Number 70515.

Applicant is reminded that there is no attorney of record at this time.

All future correspondence will be directed to assignee Advanced Predictive Analytics, Inc. at the address indicated below.

Telephone inquiries concerning this decision should be directed to Irvin Dingle at (571) 272-3210.

Irvin Dingle
Petitions Examiner
Office of Petitions

cc: Advanced Predictive Analytics, Inc.
513 E. First Street, Suite G
Tustin, CA 92780

UNITED STATES PATENT AND TRADEMARK OFFICE

UNITED STATES DEPARTMENT OF COMMERCE
United States Patent and Trademark Office
Address: COMMISSIONER FOR PATENTS
P.O. Box 1450
Alexandria, Virginia 22313-1450
www.uspto.gov

APPLICATION NUMBER	FILING OR 371(C) DATE	FIRST NAMED APPLICANT	ATTY. DOCKET NO./TITLE
13/177,154	07/06/2011	Michael L. Beydler	APA.002A

CONFIRMATION NO. 5904

POWER OF ATTORNEY NOTICE

Law Office of Robert E. Kasody
Professional Corp.
Suite 500
6601 Center Drive West
Los Angeles, CA 90045

Date Mailed: 10/03/2011

NOTICE REGARDING CHANGE OF POWER OF ATTORNEY

This is in response to the Power of Attorney filed 09/24/2011.

- The withdrawal as attorney in this application has been accepted. Future correspondence will be mailed to the new address of record. 37 CFR 1.33.

/idingle/

Office of Data Management, Application Assistance Unit (571) 272-4000, or (571) 272-4200, or 1-888-786-0101

UNITED STATES PATENT AND TRADEMARK OFFICE

UNITED STATES DEPARTMENT OF COMMERCE
United States Patent and Trademark Office
Address: COMMISSIONER FOR PATENTS
P.O. Box 1450
Alexandria, Virginia 22313-1450
www.uspto.gov

APPLICATION NUMBER	FILING OR 371(C) DATE	FIRST NAMED APPLICANT	ATTY. DOCKET NO./TITLE
13/177,154	07/06/2011	Michael L. Beydler	APA.002A

CONFIRMATION NO. 5904

Advanced Predictive Analytics, Inc.
513 E. First Street, Suite G
Tustin, CA 92780

POA ACCEPTANCE LETTER

OC000000050144555

Date Mailed: 10/03/2011

NOTICE OF ACCEPTANCE OF POWER OF ATTORNEY

This is in response to the Power of Attorney filed 09/24/2011.

The Power of Attorney in this application is accepted. Correspondence in this application will be mailed to the above address as provided by 37 CFR 1.33.

/idingle/

Office of Data Management, Application Assistance Unit (571) 272-4000, or (571) 272-4200, or 1-888-786-0101

UNITED STATES PATENT AND TRADEMARK OFFICE

UNITED STATES DEPARTMENT OF COMMERCE
United States Patent and Trademark Office
Address: COMMISSIONER FOR PATENTS
P.O. Box 1450
Alexandria, Virginia 22313-1450
www.uspto.gov

APPLICATION NO.	FILING DATE	FIRST NAMED INVENTOR	ATTORNEY DOCKET NO.	CONFIRMATION NO.
13/177,278	07/06/2011	Hiroki ITOH	150034	6155

25944 7590 10/21/2011

OLIFF & BERRIDGE, PLC
P.O. BOX 320850
ALEXANDRIA, VA 22320-4850

EXAMINER	
HWANG, JOON H	
ART UNIT	**PAPER NUMBER**
2447	

NOTIFICATION DATE	DELIVERY MODE
10/21/2011	ELECTRONIC

Please find below and/or attached an Office communication concerning this application or proceeding.

The time period for reply, if any, is set in the attached communication.

Notice of the Office communication was sent electronically on above-indicated "Notification Date" to the following e-mail address(es):

OfficeAction25944@oliff.com
jarmstrong@oliff.com

UNITED STATES PATENT AND TRADEMARK OFFICE

MAILED

Commissioner for Patents
United States Patent and Trademark Office
P.O. Box 1450
Alexandria, VA 22313-1450
www.uspto.gov

OCT 20 2011

DIRECTOR OFFICE
TECHNOLOGY CENTER 2400

James A. Oliff
OLIFF & BERRIDGE, PLC
P.O. BOX 320850
ALEXANDRIA VA 22320-4850

In re Application of: KAGEYAMA, S. et al.
Application No.: 13/**177,278**
Filed: June 06, 2011
Attorney Docket No.: 150034
For: SERVER, METHOD, AND PROGRAM FOR PROVIDING FINANCIAL INFORMATION

DECISION ON REQUEST TO PARTICIPATE IN PATENT PROSECUTION HIGHWAY PROGRAM AND PETITION TO MAKE SPECIAL UNDER 37 CFR 1.102(a)

This is a decision on the request to participate in the Patent Prosecution Highway (PPH) program and the petition under 37 CFR 1.102(a), filed **October 13, 2011**, to make the above-identified application special.

The petition is **DISMISSED.**

A grantable request to participate in the PPH program and petition to make special requires:

(1) The U.S. application (including national stage entry of a PCT application and a so-called bypass application filed under 35 U.S.C. § 111(a) which validly claims benefit under 35 U.S.C. §120 to a PCT application) is:

(Case I) – is an application that validly claims priority under 35 U.S.C. § 119(a) and 37 CFR 1.55 to one or more applications filed with JPO; or
(Case II) – is an application which is the basis of a valid priority claim under the Paris Convention for the application filed in JPO; or
(Case III) – is an application which shares a common priority document with the application filed in JPO; or
(Case IV) – and the JPO application are derived from/related to a PCT application having no priority.

Provisional applications, plant applications, design applications, reissue applications, reexamination proceedings, and applications subject to a secrecy order are excluded and not subject to participation in the PPH.

Where the JPO application that contains the allowable/patentable claims is not the same application for which priority is claimed in the U.S. application, applicant must identify the relationship between the JPO application that contains the allowable/patentable claims and the JPO priority application claimed in the U.S. application;

(2) At least one claim was determined by JPO to be allowable/patentable. Applicant must submit a copy of:
   a. The allowable/patentable claim(s) from the JPO application(s);
   b. An English translation of the allowable/patentable claim(s), if the claims were published in a language other than English);
   c. A statement that the English translation is accurate; and
   d. If the JPO office action does not explicitly state that a particular claim is allowable, the applicant must include a statement in the request for participation in the PPH program or in the transmittal letter accompanying the request for participation that no rejection has been made in the JPO office action regarding that claim, and therefore, the claim is deemed allowable by JPO;

(3) Applicant must:
   a. Ensure all the claims in the U.S. application must sufficiently correspond or be amended to sufficiently correspond to the allowable/patentable claim(s) in the JPO application(s). Claims are considered to "sufficiently correspond" where, accounting for differences due to translations and claim format, the claims in the USPTO are of the same or similar scope as the claims in the JPO, or the claims in the USPTO are narrower in scope than the claims in the JPO. In this regard, a claim that is narrower in scope occurs when a JPO claim is amended to be further limited by an additional feature that is supported in the specification (description and/or claims). A claim in the USPTO which introduces a new/different category of claims to those claims indicated as allowable in the JPO is not considered to sufficiently correspond. and
   b. Submit a claim correspondence table in English indicating how all the claims in the U.S. application correspond to the allowable/patentable claims in the JPO Application(s). Dependent claims with addition limitations must be clearly identified in the claims correspondence table;

(4) Examination of the U.S. application has not begun;

(5) The applicant must file a request for participation in the PPH program and a request that the U.S. application be advanced out of turn for examination by order of the Director to expedite the business of the Office under 37 CFR 1.102(a).

(6) Applicant must submit:
   a. Documentation of prior office action: (i.) a copy of the office action(s) just prior to the "Decision to Grant a Patent" from each of the JPO application(s) containing the allowable/patentable claim(s) or (ii.) if the allowable/patentable claims(s) are from a "Notification of Reasons for Refusal" then the Notification of Reasons for

Refusal or (iii.) if the JPO application is a first action allowance then no office action from the JPO is necessary should be indicated on the request/petition form;

b. The applicant must submit copies of any office actions (which are relevant to patentability) from the JPO application(s) issued after the grant of the request for participation in the PPH program in the USPTO (especially where JPO might have reversed a prior holding of allowability).
c. An English language translation of the JPO office action(s) (if the office action(s) are not in the English language); and
d. A statement that the English translation is accurate;

(7) Applicant must submit:
a. An IDS listing the documents cited by the JPO examiner in the JPO office action (unless already filed in this application); and
b. Copies of all the documents cited in the JPO office action, except U.S. patents or U.S. patent application publications (unless already filed in this application).

The file wrapper of instant application and File Listing on the Electronic Acknowledgment Receipts (EFS) dated 10/13/11 and 07/06/11, however, no copy of: (a.) The allowable/patentable claim(s) from the JPO application(s); (b.) An English translation of the allowable/patentable claim(s), if the claims were published in a language other than English); and (c.) a statement that the English translation [of the claims] is accurate has been found.

Hence, the petition fails to meet condition/requirement (2), as noted above.

Accordingly, the petition is **DISMISSED**.

Applicant is given a time period of ONE MONTH or THIRTY DAYS, whichever is longer, to correct the deficiencies. NO EXTENSION OF TIME UNDER 37 CFR 1.136 IS PERMITTED.

If the deficiencies are not corrected with the time period given, the application will await action in its regular turn. Responses must be submitted by EFS-Web using the document description "Petition to make special under Pat Pros Hwy".

Telephone inquiries concerning this decision should be directed to Beatriz Prieto at 571-272-3902. A second point of contact is Hassan Kizou at 571-272-3088. All other inquiries concerning the examination or status of the application is accessible in the PAIR system at http://www.uspto.gov/ebc/index.html.

/Beatriz Prieto/

Beatriz Prieto, Quality Assurance Specialist
Technology Center 2400

UNITED STATES PATENT AND TRADEMARK OFFICE

UNITED STATES DEPARTMENT OF COMMERCE
United States Patent and Trademark Office
Address: COMMISSIONER FOR PATENTS
P.O. Box 1450
Alexandria, Virginia 22313-1450
www.uspto.gov

APPLICATION NO.	FILING DATE	FIRST NAMED INVENTOR	ATTORNEY DOCKET NO.	CONFIRMATION NO.
13/177,278	07/06/2011	Hiroki ITOH	150034	6155

25944 7590 11/29/2011

OLIFF & BERRIDGE, PLC
P.O. BOX 320850
ALEXANDRIA, VA 22320-4850

EXAMINER	
HWANG, JOON H	

ART UNIT	PAPER NUMBER
2447	

NOTIFICATION DATE	DELIVERY MODE
11/29/2011	ELECTRONIC

Please find below and/or attached an Office communication concerning this application or proceeding.

The time period for reply, if any, is set in the attached communication.

Notice of the Office communication was sent electronically on above-indicated "Notification Date" to the following e-mail address(es):

OfficeAction25944@oliff.com
jarmstrong@oliff.com

UNITED STATES PATENT AND TRADEMARK OFFICE

Commissioner for Patents
United States Patent and Trademark Office
P.O. Box 1450
Alexandria, VA 22313-1450
www.uspto.gov

Linda M. Saltiel
OLIFF & BERRIDGE, PLC
P.O. BOX 320850
ALEXANDRIA VA 22320-4850

In re Application of: KAGEYAMA, S. et al.
Application No.: **13/177,278**
Filed: June 06, 2011
Attorney Docket No.: 150034
For: SERVER, METHOD, AND PROGRAM FOR PROVIDING FINANCIAL INFORMATION

DECISION ON REQUEST TO PARTICIPATE IN PATENT PROSECUTION HIGHWAY PROGRAM AND PETITION TO MAKE SPECIAL UNDER 37 CFR 1.102(a)

This is a decision on renew request to participate in the Patent Prosecution Highway (PPH) program and the petition under 37 CFR 1.102(a), filed **November 14, 2011**, to make the above-identified application special.

The petition is **GRANTED.**

A grantable request to participate in the PPH program and petition to make special requires:

(1) The U.S. application (including national stage entry of a PCT application and a so-called bypass application filed under 35 U.S.C. § 111(a) which validly claims benefit under 35 U.S.C. §120 to a PCT application) is:

(Case I) – is an application that validly claims priority under 35 U.S.C. § 119(a) and 37 CFR 1.55 to one or more applications filed with JPO; or
(Case II) – is an application which is the basis of a valid priority claim under the Paris Convention for the application filed in JPO; or
(Case III) – is an application which shares a common priority document with the application filed in JPO; or
(Case IV) – and the JPO application are derived from/related to a PCT application having no priority.

Provisional applications, plant applications, design applications, reissue applications, reexamination proceedings, and applications subject to a secrecy order are excluded and not subject to participation in the PPH.

Where the JPO application that contains the allowable/patentable claims is not the same application for which priority is claimed in the U.S. application, applicant must identify the relationship between the JPO application that contains the allowable/patentable claims and the JPO priority application claimed in the U.S. application;

(2) At least one claim was determined by JPO to be allowable/patentable. Applicant must submit a copy of:
   a. The allowable/patentable claim(s) from the JPO application(s);
   b. An English translation of the allowable/patentable claim(s), if the claims were published in a language other than English);
   c. A statement that the English translation is accurate; and
   d. If the JPO office action does not explicitly state that a particular claim is allowable, the applicant must include a statement in the request for participation in the PPH program or in the transmittal letter accompanying the request for participation that no rejection has been made in the JPO office action regarding that claim, and therefore, the claim is deemed allowable by JPO;

(3) Applicant must:
   a. Ensure all the claims in the U.S. application must sufficiently correspond or be amended to sufficiently correspond to the allowable/patentable claim(s) in the JPO application(s). Claims are considered to "sufficiently correspond" where, accounting for differences due to translations and claim format, the claims in the USPTO are of the same or similar scope as the claims in the JPO, or the claims in the USPTO are narrower in scope than the claims in the JPO. In this regard, a claim that is narrower in scope occurs when a JPO claim is amended to be further limited by an additional feature that is supported in the specification (description and/or claims). A claim in the USPTO which introduces a new/different category of claims to those claims indicated as allowable in the JPO is not considered to sufficiently correspond. and
   b. Submit a claim correspondence table in English indicating how all the claims in the U.S. application correspond to the allowable/patentable claims in the JPO Application(s). Dependent claims with addition limitations must be clearly identified in the claims correspondence table;

(4) Examination of the U.S. application has not begun;

(5) The applicant must file a request for participation in the PPH program and a request that the U.S. application be advanced out of turn for examination by order of the Director to expedite the business of the Office under 37 CFR 1.102(a).

(6) Applicant must submit:
   a. Documentation of prior office action: (i.) a copy of the office action(s) just prior to the "Decision to Grant a Patent" from each of the JPO application(s) containing the allowable/patentable claim(s) or (ii.) if the allowable/patentable claims(s) are from a "Notification of Reasons for Refusal" then the Notification of Reasons for

Refusal or (iii.) if the JPO application is a first action allowance then no office action from the JPO is necessary should be indicated on the request/petition form;

b. The applicant must submit copies of any office actions (which are relevant to patentability) from the JPO application(s) issued after the grant of the request for participation in the PPH program in the USPTO (especially where JPO might have reversed a prior holding of allowability).

c. An English language translation of the JPO office action(s) (if the office action(s) are not in the English language); and

d. A statement that the English translation is accurate;

(7) Applicant must submit:

a. An IDS listing the documents cited by the JPO examiner in the JPO office action (unless already filed in this application); and

b. Copies of all the documents cited in the JPO office action, except U.S. patents or U.S. patent application publications (unless already filed in this application).

The renew petition/request to participate in the PPH program and petition are found to comply with all the above requirements. Accordingly, the above-identified application has been accorded **"special"** status.

Accordingly, the petition is **GRANTED.**

Telephone inquiries concerning this decision should be directed to Beatriz Prieto at 571-272-3902. A second point of contact is Hassan Kizou at 571-272-3088. All other inquiries concerning the examination or status of the application is accessible in the PAIR system at http://www.uspto.gov/ebc/index.html.

The application is being forwarded to the examiner for action on the merits commensurate with this decision.

/Beatriz Prieto/

Beatriz Prieto, Quality Assurance Specialist
Technology Center 2400

UNITED STATES PATENT AND TRADEMARK OFFICE

Commissioner for Patents
United States Patent and Trademark Office
P.O. Box 1450
Alexandria, VA 22313-1450
www.uspto.gov

BARLOW, JOSEPHS & HOLMES, LTD.
101 DYER STREET
5TH FLOOR
PROVIDENCE RI 02903

MAILED

DEC 21 2011

OFFICE OF PETITIONS

In re Application of :
Ulf Bamberg et al. :
Application No. 13/177,284 :
Filed: July 6, 2011 : ON PETITION
Atty Docket No. A030 P0619-US2 :

This is in response to the petition under 37 CFR 1.47(b) filed December 17, 2011.

The petition is **GRANTED**.

In response to the Notice to File Missing Parts mailed July 19, 2011, and in accordance with 37 CFR 1.63(d), petitioner has submitted a copy of the executed oath or declaration from parent application no. 09/980,466, filed June 1, 1999. The instant application is a continuation of application no. 12/977,555, filed December 23, 2010, which is a continuation of application no. 09/980,466, filed June 1, 1999.

The petition and declaration have been reviewed and determined to be in compliance with 37 C.F.R. 1.47(b). Specifically, petitioner has included a copy of a decision according Rule 47 application from the parent application.

The application is hereby accorded Rule 47 status. As provided in Rule 1.47(c), since notice was provided after the grant of Rule 1.47(b) status in the prior application, the Office is dispensing with the notice provision in this divisional application.

After this decision is mailed, the matter will be referred to the Office of Patent Application Processing for further pre-examination processing.

Telephone inquiries concerning this matter may be directed to the undersigned Petitions Attorney at (571) 272-3212.

Patricia Faison-Ball

Patricia Faison-Ball
Senior Petitions Attorney
Office of Petitions

UNITED STATES PATENT AND TRADEMARK OFFICE

Commissioner for Patents
United States Patent and Trademark Office
P.O. Box 1450
Alexandria, VA 22313-1450
www.uspto.gov

In re Application of
Sigram Schindler

Application No. 13177346

Filed: July 6,2011

Attorney Docket No. 8096.059.DVUS01

:DECISION ON PETITION TO MAKE SPECIAL
:UNDER 37 CFR 1.102(c)(1)

This is a decision on the electronic petition under 37 CFR 1.102 (c)(1), filed 12-AUG-2011 to make the above-identified application special based on applicant's age as set forth in MPEP § 708.02, Section IV.

The petition is **GRANTED**.

A grantable petition to make an application special under 37 CFR 1.102(c)(1), MPEP § 708.02, Section IV: Applicant's Age must include a statement by applicant or a registered practitioner having evidence that applicant is at least 65 years of age. No fee is required.

Accordingly, the above-identified application has been accorded "special" status and will be taken up for action by the examiner upon the completion of all pre-examination processing.

Telephone inquiries concerning this electronic decision should be directed to the Electronic Business Center at 866-217-9197.

All other inquiries concerning either the examination or status of the application should be directed to the Technology Center.

Doc code : PET.OP.AGE
Description : Petition to make special based on Age/Health

PTO/SB/130 (07-09)
Approved for use through 07/31/2012. OMB 0651- 0031
U.S. Patent and Trademark Office; U.S. DEPARTMENT OF COMMERCE
Under the Paperwork Reduction Act of 1995, no persons are required to respond to a collection of information unless it contains a valid OMB control number

PETITION TO MAKE SPECIAL BASED ON AGE FOR ADVANCEMENT OF EXAMINATION UNDER 37 CFR 1.102(c)(1)

Application Information

Application Number	13177346	Confirmation Number	6283	Filing Date	2011-07-06
Attorney Docket Number (optional)	8096.059.DVUS	Art Unit	2827	Examiner	Jain
First Named Inventor	Sigram Schindler				
Title of Invention	WLAN Roaming and Selection Using Managed WLAN Handover Process				

Attention: Office of Petitions
An application may be made special for advancement of examination upon filing of a petition showing that the applicant is 65 years of age, or more. No fee is required with such a petition. See 37 CFR 1.102(c)(1) and MPEP 708.02 (IV).

APPLICANT HEREBY PETITIONS TO MAKE SPECIAL FOR ADVANCEMENT OF EXAMINATION IN THIS APPLICATION UNDER 37 CFR 1.102(c)(1) and MPEP 708.02 (IV) ON THE BASIS OF THE APPLICANT'S AGE.

A grantable petition requires one of the following items:
(1) Statement by one named inventor in the application that he/she is 65 years of age, or more; or
(2) Certification by a registered attorney/agent having evidence such as a birth certificate, passport, driver's license, etc. showing one named inventor in the application is 65 years of age, or more.

Name of Inventor who is 65 years of age, or older

Given Name	Middle Name	Family Name	Suffix
Sigram		Schindler	

A signature of the applicant or representative is required in accordance with 37 CFR 1.33 and 10.18. Please see 37 CFR 1.4(d) for the format of the signature.

Select (1) or (2) :

○ (1) I am an inventor in this application and I am 65 years of age, or more.

● (2) I am an attorney or agent registered to practice before the Patent and Trademark Office, and I certify that I am in possession of evidence, and will retain such in the application file record, showing that the inventor listed above is 65 years of age, or more.

Signature	/Vincent M DeLuca/	Date (YYYY-MM-DD)	2011-08-12
Name	Vincent M DeLuca	Registration Number	32408

PTO/SB/130 (07-09)
Approved for use through 07/31/2012. OMB 0651- 0031
U.S. Patent and Trademark Office; U.S. DEPARTMENT OF COMMERCE
Under the Paperwork Reduction Act of 1995, no persons are required to respond to a collection of information unless it contains a valid OMB control number

Privacy Act Statement

The Privacy Act of 1974 (P.L. 93-579) requires that you be given certain information in connection with your submission of the attached form related to a patent application or patent. Accordingly, pursuant to the requirements of the Act, please be advised that: (1) the general authority for the collection of this information is 35 U.S.C. 2(b)(2); (2) furnishing of the information solicited is voluntary; and (3) the principal purpose for which the information is used by the U.S. Patent and Trademark Office is to process and/or examine your submission related to a patent application or patent. If you do not furnish the requested information, the U.S. Patent and Trademark Office may not be able to process and/or examine your submission, which may result in termination of proceedings or abandonment of the application or expiration of the patent.

The information provided by you in this form will be subject to the following routine uses:

1. The information on this form will be treated confidentially to the extent allowed under the Freedom of Information Act (5 U.S.C. 552) and the Privacy Act (5 U.S.C. 552a). Records from this system of records may be disclosed to the Department of Justice to determine whether the Fr eedom of Information Act requires disclosure of these records.

2. A record from this system of records may be disclosed, as a routine use, in the course of presenting evidence to a court, magistrate, or administrative tribunal, including disclosures to opposing counsel in the course of settlement negotiations.

3. A record in this system of records may be disclosed, as a routine use, to a Member of Congress submitting a request involving an individual, to whom the record pertains, when the individual has requested assistance from the Member with respect to the subject matter of the record.

4. A record in this system of records may be disclosed, as a routine use, to a contractor of the Agency having need for the information in order to perform a contract. Recipients of information shall be required to comply with the requirements of the Privacy Act of 1974, as amended, pursuant to 5 U.S.C. 552a(m).

5. A record related to an International Application filed under the Patent Cooperation Treaty in this system of records may be disclosed, as a routine use, to the International Bureau of the World Intellectual Property Organization, pursuant to the Patent Cooperation Treaty.

6. A record in this system of records may be disclosed, as a routine use, to another federal agency for purposes of National Security review (35 U.S.C. 181) and for review pursuant to the Atomic Energy Act (42 U.S.C. 218(c)).

7. A record from this system of records may be disclosed, as a routine use, to the Administrator, General Services, or his/her designee, during an inspection of records conducted by GSA as part of that agency's responsibility to recommend improvements in records management practices and programs, under authority of 44 U.S.C. 2904 and 2906. Such disclosure shall be made in accordance with the GSA regulations governing inspection of records for this purpose, and any other relevant (i.e., GSA or Commerce) directive. Such disclosure shall not be used to make determinations about indivi duals.

8. A record from this system of records may be disclosed, as a routine use, to the public after either publication of the application pursuant to 35 U.S.C. 122(b) or issuance of a patent pursuant to 35 U.S.C. 151. Further, a record may be disclosed, subject to the limitations of 37 CFR 1.14, as a routine use, to the public if the record was filed in an application which became abandoned or in which the proceedings were terminated and which application is referenced by either a published application, an application open to public inspections or an issued patent.

9. A record from this system of records may be disclosed, as a routine use, to a Federal, State, or local law enforcement agency, if the USPTO becomes aware of a violation or potential violation of law or regulation.

UNITED STATES PATENT AND TRADEMARK OFFICE

Commissioner for Patents
United States Patent and Trademark Office
P.O. Box 1450
Alexandria, VA 22313-1450
www.uspto.gov

MAILED

NOV 17 2011

OFFICE OF PETITIONS

KILPATRICK TOWNSEND & STOCKTON LLP
TWO EMBARCADERO CENTER
EIGHTH FLOOR
SAN FRANCISCO, CA 94111-3834

In re Application of :
Michael L. Tupper, et al. :
Application No. 13/177,368 : DECISION ON PETITION
Filed: July 6, 2011 : TO MAKE SPECIAL UNDER
Attorney Docket No. 90367-807466 : 37 CFR 1.102(c)(1)
:

This is a decision on the petition under 37 CFR 1.102(c)(1), filed November 1, 2011, to make the above-identified application special based on applicant's age as set forth in M.P.E.P. § 708.02, Section IV.

The petition is **GRANTED**.

A grantable petition to make an application special under 37 CFR 1.102(c)(1) and MPEP § 708.02, Section IV: Applicant's Age must be accompanied by evidence showing that at least one of the applicants is 65 years of age, or more, such as a birth certificate or a statement by applicant. No fee is required

The instant petition includes a statement from applicant's representative that he is in possession of proof that Robert Worrall is at least 65 years of age. Accordingly, the above-identified application has been accorded "special" status.

Telephone inquiries concerning this decision should be directed to undersigned at 571-272-1642.

All other inquiries concerning either the examination or status of the application should be directed to the Technology Center.

The application is being forwarded to the Technology Center Art Unit 3754 for action on the merits commensurate with this decision.

/AMW/
April M. Wise
Petitions Examiner
Office of Petitions

Doc Code: PPH.PCT.652
Document Description: Petition to make special under PCT-Patent Pros Hwy

PTO/SB/20PCT-US (09-10)
Approved for use through 01/31/2012. OMB 0651-0058
U.S. Patent and Trademark Office; U. S. DEPARTMENT OF COMMERCE
Under the Paperwork Reduction Act of 1995, no persons are required to respond to a collection of information unless it displays a valid OMB control number.

REQUEST FOR PARTICIPATION IN THE PATENT COOPERATION TREATY - PATENT PROSECUTION HIGHWAY (PCT-PPH) PILOT PROGRAM IN A U.S. APPLICATION WHERE THE USPTO WAS THE ISA OR IPEA

Application No:	13/177,380	Filing date:	07/06/2011
First Named Inventor:	LAITSCH		
Title of the Invention:	HYDROPONIC PLANT GROWING SYSTEM		

THIS REQUEST FOR PARTICIPATION IN THE PCT-PPH PILOT PROGRAM ALONG WITH THE REQUIRED DOCUMENTS MUST BE SUBMITTED VIA EFS-WEB. INFORMATION REGARDING EFS-WEB IS AVAILABLE AT HTTP://WWW.USPTO.GOV/EBC/EFS_HELP.HTML

APPLICANT HEREBY REQUESTS PARTICIPATION IN THE PCT-PPH PROGRAM AND PETITIONS TO MAKE THE ABOVE-IDENTIFIED APPLICATION SPECIAL UNDER THE PCT-PPH PROGRAM.

The above-identified application is (1) a national stage entry of the corresponding PCT application, or (2) a national stage entry of another PCT application which claims priority to the corresponding PCT application, or (3) a national application that claims domestic/ foreign priority to the corresponding PCT application, or (4) a national application which forms the basis for the priority claim in the corresponding PCT application, or (5) a continuing application of a U.S. application that satisfies one of (1) to (4) above, or (6) a U.S. application that claims domestic benefit to a U.S. provisional application which forms the basis for the priority claim in the corresponding PCT application.

PCT/US2011/043544

The corresponding PCT application number(s) is/are:

The international date of the corresponding PCT application(s) is/are:

11 JULY 2011

I. List of Required Documents:

a. **A copy of the latest international work product (WO/ISA, WO/IPEA, or IPER) in the above–identified corresponding PCT application(s)**

☐ Is attached

☒ Is not attached because the document is already in the U.S. application.

b. **A copy of all claims which were indicated as having novelty, inventive step and industrial applicability in the above-identified corresponding PCT application(s).**

☒ Is attached.

☐ Is not attached because the document is already in the U.S. application.

c. **English translations of the documents in a. and b. above are attached (if the documents are not in the English language). A statement that the English translation is accurate is attached for the document in b. above.**

This collection of information is required by 35 U.S.C. 119, 37 CFR 1.55, and 37 CFR 1.102(d). The information is required to obtain or retain a benefit by the public, which is to file (and by the USPTO to process) an application. Confidentiality is governed by 35 U.S.C. 122 and 37 CFR 1.11 and 1.14. This collection is estimated to take 2 hours to complete, including gathering, preparing, and submitting the completed application form to the USPTO. Time will vary depending upon the individual case. Any comments on the amount of time you require to complete this form and/or suggestions for reducing this burden should be sent to the Chief Information Officer, U.S. Patent and Trademark Office, U.S. Department of Commerce, P.O. Box 1450, Alexandria, VA 22313-1450. DO NOT SEND FEES OR COMPLETED FORMS TO THIS ADDRESS.

PTO/SB/20PCT-US (09-10)
Approved for use through 01/31/2012. OMB 0651-0058
U.S.Patent and Trademark Office; U.S. DEPARTMENT OF COMMERCE
Under the Paperwork Reduction Act of 1995, no persons are required to respond to a collection of information unless it displays a valid OMB control number.

REQUEST FOR PARTICIPATION IN THE PCT-PPH PILOT PROGRAM IN A U.S. APPLICATION WHERE THE USPTO WAS THE ISA OR IPEA (continued)

Application No.:	13/177,380
First Named Inventor:	LAITSCH

d. **(1) An information disclosure statement listing the documents cited in the international work products (ISR, WO/ISA, WO/IPEA, IPER) of the corresponding PCT application.**

☐ Is attached

☒ Has already been filed in the above-identified U.S. application on 1/6/2012

(2) Copies of all documents (except) for U.S. patents or U.S. patent application publications)

☐ Are attached.

☒ Have already been filed in the above-identified U.S. application on 1/6/2012

II. Claims Correspondence Table:

Claims in US Application	Patentable Claims in the corresponding PCT Application	Explanation regarding the correspondence
6	6	Exact match.
7	7	Exact match.
15	15	Exact match.
16	16	Exact match.
17	17	Exact match.
18	18	Exact match.

III. All the claims in the US application sufficiently correspond to the patentable claims in the corresponding PCT application.

Signature /C.W. Mueller/	Date January 17, 2012
Name (Print/Typed) Craig W. Mueller	Registration Number 52055

Privacy Act Statement

The **Privacy Act of 1974 (P.L. 93-579)** requires that you be given certain information in connection with your submission of the attached form related to a patent application or patent. Accordingly, pursuant to the requirements of the Act, please be advised that: (1) the general authority for the collection of this information is 35 U.S.C. 2(b)(2); (2) furnishing of the information solicited is voluntary; and (3) the principal purpose for which the information is used by the U.S. Patent and Trademark Office is to process and/or examine your submission related to a patent application or patent. If you do not furnish the requested information, the U.S. Patent and Trademark Office may not be able to process and/or examine your submission, which may result in termination of proceedings or abandonment of the application or expiration of the patent.

The information provided by you in this form will be subject to the following routine uses:

1. The information on this form will be treated confidentially to the extent allowed under the Freedom of Information Act (5 U.S.C. 552) and the Privacy Act (5 U.S.C 552a). Records from this system of records may be disclosed to the Department of Justice to determine whether disclosure of these records is required by the Freedom of Information Act.
2. A record from this system of records may be disclosed, as a routine use, in the course of presenting evidence to a court, magistrate, or administrative tribunal, including disclosures to opposing counsel in the course of settlement negotiations.
3. A record in this system of records may be disclosed, as a routine use, to a Member of Congress submitting a request involving an individual, to whom the record pertains, when the individual has requested assistance from the Member with respect to the subject matter of the record.
4. A record in this system of records may be disclosed, as a routine use, to a contractor of the Agency having need for the information in order to perform a contract. Recipients of information shall be required to comply with the requirements of the Privacy Act of 1974, as amended, pursuant to 5 U.S.C. 552a(m).
5. A record related to an International Application filed under the Patent Cooperation Treaty in this system of records may be disclosed, as a routine use, to the International Bureau of the World Intellectual Property Organization, pursuant to the Patent Cooperation Treaty.
6. A record in this system of records may be disclosed, as a routine use, to another federal agency for purposes of National Security review (35 U.S.C. 181) and for review pursuant to the Atomic Energy Act (42 U.S.C. 218(c)).
7. A record from this system of records may be disclosed, as a routine use, to the Administrator, General Services, or his/her designee, during an inspection of records conducted by GSA as part of that agency's responsibility to recommend improvements in records management practices and programs, under authority of 44 U.S.C. 2904 and 2906. Such disclosure shall be made in accordance with the GSA regulations governing inspection of records for this purpose, and any other relevant (*i.e.*, GSA or Commerce) directive. Such disclosure shall not be used to make determinations about individuals.
8. A record from this system of records may be disclosed, as a routine use, to the public after either publication of the application pursuant to 35 U.S.C. 122(b) or issuance of a patent pursuant to 35 U.S.C. 151. Further, a record may be disclosed, subject to the limitations of 37 CFR 1.14, as a routine use, to the public if the record was filed in an application which became abandoned or in which the proceedings were terminated and which application is referenced by either a published application, an application open to public inspection or an issued patent.
9. A record from this system of records may be disclosed, as a routine use, to a Federal, State, or local law enforcement agency, if the USPTO becomes aware of a violation or potential violation of law or regulation.

UNITED STATES PATENT AND TRADEMARK OFFICE

Commissioner for Patents
United States Patent and Trademark Office
P.O. Box 1450
Alexandria, VA 22313-1450
www.uspto.gov

Perkins Coie LLP - Monolithic
Power Systems
P.O. BOX 1247
SEATTLE WA 98111-1247

MAILED

AUG 24 2011

OFFICE OF PETITIONS

In re Application of :
Yu et al. : DECISION ON PETITION
Application No. 13/177,420 :
Deposited: July 6, 2011 :
Atty Docket No. 386168179US :

This is a decision on the "RESPONSE TO NOTICE OF INCOMPLETE NONPROVISIONAL APPLICATION & PETITION UNDER 37 CFR 1.57(A)," filed August 8, 2011, requesting that the above-referenced application be accorded a filing date of July 6, 2011.

The petition under 37 CFR 1.57(a) is **DISMISSED.**

Any reconsideration petition should be filed within two (2) months of the mail date of this decision on petition.

The application was deposited on July 6, 2011. A Notice of Incomplete Nonprovisional Application was mailed on July 19, 2011.

Petitioners timely filed the present petition in response on August 8, 2011. Petitioners state that drawings were inadvertently omitted from the application deposited on July 6, 2011. Petitioners argue that because the declaration submitted with the application deposited on July 6, 2011 contains a claim for benefit of priority under 37 CFR 1.55 to Chinese Application No. 201010229847.9, that, pursuant to 37 CFR 1.57(a)(3), petitioners are permitted to amend the above- identified application to include the drawings and thereby, obtain a July 6, 2011 filing date for the application.

The applicable rule provides (in pertinent part):

§ 1.57 Incorporation by reference.

(a) Subject to the conditions and requirements of this paragraph, if all or a portion of the specification or drawing(s) is inadvertently omitted from an application, but the application contains a claim under § 1.55 for priority of a prior-filed foreign application, or a claim under § 1.78 for the benefit of a prior-filed provisional, nonprovisional, or international application, that was present on the filing date of the application, and the inadvertently omitted portion of the specification or drawing(s) is completely contained in the prior-filed application, the claim under § 1.55 or § 1.78 shall also be considered an incorporation by reference of the prior-filed application as to the inadvertently omitted portion of the specification or drawing(s).

(1) The application must be amended to include the inadvertently omitted portion of the specification or drawing(s) within any time period set by the Office, but in no case later than the close of prosecution as defined by § 1.114(b), or abandonment of the application, whichever occurs earlier. The applicant is also required to:

(i) Supply a copy of the prior-filed application, except where the prior-filed application is an application filed under 35 U.S.C. 111;

(ii) Supply an English language translation of any prior-filed application that is in a language other than English; and

(iii) Identify where the inadvertently omitted portion of the specification or drawings can be found in the prior-filed application.

...

(3) If an application is not otherwise entitled to a filing date under § 1.53(b), the amendment must be by way of a petition pursuant to this paragraph accompanied by the fee set forth in § 1.17(f).

The petition is dismissed because petitioners did not supply a English language translation of the **entire** Chinese application.

Further correspondence with respect to this matter should be delivered through one of the following mediums:

By mail: Mail Stop PETITIONS
Commissioner for Patents
Post Office Box 1450
Alexandria, VA 22313-1450

By hand: Customer Service Window
Mail Stop Petitions
Randolph Building
401 Dulany Street
Alexandria, VA 22314

By fax: (571) 273-8300
ATTN: Office of Petitions

By internet: EFS-Web
www.uspto.gov/ebc/efs_help.html
(for help using EFS-Web call the Patent Electronic Business Center at (866) 217-9197)

Telephone inquiries concerning this matter may be directed to Petitions Attorney Shirene Willis Brantley at (571) 272-3230.

Chris Bottorff
Supervisor
Office of Petitions

UNITED STATES PATENT AND TRADEMARK OFFICE

Commissioner for Patents
United States Patent and Trademark Office
P.O. Box 1450
Alexandria, VA 22313-1450
www.uspto.gov

Perkins Coie LLP - Monolithic
Power Systems
P.O. BOX 1247
SEATTLE WA 98111-1247

MAILED
NOV 08 2011
OFFICE OF PETITIONS

In re Application of :
Yu et al. : DECISION ON PETITION
Application No. 13/177,420 :
Deposited: July 6, 2011 :
Atty Docket No. 386168179US :

This is a decision on the "RESPONSE TO DECISION ON PETITION FOR THE NOTICE OF INCOMPLETE NONPROVISIONAL APPLICATION & PETITION UNDER 37 CFR 1.57(A)," filed October 24, 2011, requesting that the above-referenced application be accorded a filing date of July 6, 2011.

The petition under 37 CFR 1.57(a)(3) is **GRANTED**.

The application was deposited on July 6, 2011. A Notice of Incomplete Nonprovisional Application was mailed on July 19, 2011. Petitioners timely filed a petition under 37 CFR 1.57(a)(3) in response on August 8, 2011. The petition was dismissed on August 24, 2011.

Petitioners filed the present reconsideration petition on October 24, 2011. Petitioners state that drawings were inadvertently omitted from the application deposited on July 6, 2011. Petitioners argue that because the declaration submitted with the application deposited on July 6, 2011 contains a claim for benefit of priority under 37 CFR 1.55 to Chinese Application No. 201010229847.9, filed July 14, 2010, that, pursuant to 37 CFR 1.57(a)(3), petitioners are permitted to amend the above-identified application to include the drawings and thereby, obtain a July 6, 2011 filing date for the application.

The applicable rule provides (in pertinent part):

§ 1.57 Incorporation by reference.

(a) Subject to the conditions and requirements of this paragraph, if all or a portion of the specification or drawing(s) is inadvertently omitted from an application, but the application contains a claim under § 1.55 for priority of a prior-filed foreign application, or a claim under § 1.78 for the benefit of a prior-filed provisional, nonprovisional, or international application, that was present on the filing date of the application, and the inadvertently omitted portion of the specification or drawing(s) is completely contained in the prior-filed application, the claim under § 1.55 or § 1.78 shall also be considered an incorporation by reference of the prior-filed application as to the inadvertently omitted portion of the specification or drawing(s).

(1) The application must be amended to include the inadvertently omitted portion of the specification or drawing(s) within any time period set by the Office, but in no case later than the close of prosecution as defined by § 1.114(b), or abandonment of the application, whichever occurs earlier. The applicant is also required to:

(i) Supply a copy of the prior-filed application, except where the prior-filed application is an application filed under 35 U.S.C. 111;

(ii) Supply an English language translation of any prior-filed application that is in a language other than English; and

(iii) Identify where the inadvertently omitted portion of the specification or drawings can be found in the prior-filed application.

...

(3) If an application is not otherwise entitled to a filing date under § 1.53(b), the amendment must be by way of a petition pursuant to this paragraph accompanied by the fee set forth in § 1.17(f).

It is noted that the application as filed included a claim under 1.55 for the benefit of prior-filed Chinese Application No. 201010229847.9, filed July 14, 2010. Thus, pursuant to 1.57,

the application as filed is considered to have incorporated by reference the prior-filed application as to the inadvertently omitted drawings.

Petitioners have filed an amendment adding the inadvertently omitted drawings, a copy of the prior-filed application, an English language translation of the application, an identification of where the inadvertently omitted drawings may be found in the prior-filed application, and the $400.00 petition fee.

In view of the incorporation by reference of the prior application, the drawings supplied on August 8, 2011, would not constitute new matter if they were a part of the original disclosure of the prior application. Of course, the examiner is expected to compare the drawings supplied on August 8, 2011, to the drawings in the prior-filed application in order to verify that the drawings are accurate copies of the prior drawings and that they contain no new matter.

In view thereof, the petition is GRANTED.

The application is being forwarded to the Office of Patent Application Processing (OPAP) for according of a filing date of July 6, 2011, including the copies of the drawings from the prior-filed application, which were supplied on August 8, 2011. Applicants will receive appropriate notifications regarding the fees owed, if any, and other information in due course from OPAP.

Telephone inquiries concerning this matter may be directed to Petitions Attorney Shirene Willis Brantley at (571) 272-3230.

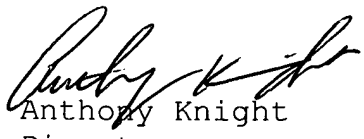

Anthony Knight
Director
Office of Petitions

UNITED STATES PATENT AND TRADEMARK OFFICE

Commissioner for Patents
United States Patent and Trademark Office
P.O. Box 1450
Alexandria, VA 22313-1450
www.uspto.gov

DAVID E. NEWHOUSE
NEWHOUSE & ASSOCIATES
477 NINTH AVE. 112
SAN MATEO CA 94402-1858

MAILED
JUL 27 2011
OFFICE OF PETITIONS

In re Application of	:	
LUCCO	:	
Application No. 13/177,481	:	DECISION ON PETITION
Filed: July 6, 2011	:	TO MAKE SPECIAL UNDER
Attorney Docket No. AJL-101	:	37 CFR 1.102(c)(1)
	:	

This is a decision on the petition under 37 CFR 1.102(c)(1), filed July 6, 2011, to make the above-identified application special based on applicant's age as set forth in M.P.E.P. § 708.02, Section IV.

The petition is **GRANTED**.

A grantable petition to make an application special under 37 CFR 1.102(c)(1) and MPEP § 708.02, Section IV: Applicant's Age must be accompanied by evidence showing that at least one of the applicants is 65 years of age, or more, such as a birth certificate or a statement by applicant. No fee is required

The instant petition includes a statement made by registered attorney Ray K. Shahani, which will be treated as the result of the attorney having evidence that at least one of the applicants is 65 years of age or more. In the event that such evidence is not with the attorney, the Office should be notified immediately. Accordingly, the above-identified application has been accorded "special" status.

Telephone inquiries concerning this decision should be directed to the undersigned at (571) 272-6735.

All other telephone inquiries should be directed to the Office of Data Management at (571) 272-4000.

This application is being referred back to the Office of Data Management for further processing. This application will be accorded "special" status when pre-examination processing is done.

/Diane C. Goodwyn/
Diane C. Goodwyn
Petitions Examiner
Office of Petitions

UNITED STATES PATENT AND TRADEMARK OFFICE

Commissioner for Patents
United States Patent and Trademark Office
P.O. Box 1450
Alexandria, VA 22313-1450
www.uspto.gov

MAILED

AUG 08 2011

OFFICE OF PETITIONS

RAY K. SHAHANI, ESQ., ATTORNEY AT LAW
TWIN OAKS OFFICE PLAZA
477 NORTH NINTH AVENUE, SUITE 112
SAN MATEO CA 94402-1858

In re Application of	:	
LUCCO	:	**CORRECTED**
Application No. 13/177,481	:	DECISION ON PETITION
Filed: July 6, 2011	:	TO MAKE SPECIAL UNDER
Attorney Docket No. AJL-101	:	37 CFR 1.102(c)(1)
	:	

This is a decision on the petition under 37 CFR 1.102(c)(1), filed July 6, 2011, to make the above-identified application special based on applicant's age as set forth in M.P.E.P. § 708.02, Section IV.

The petition is **GRANTED**.

A grantable petition to make an application special under 37 CFR 1.102(c)(1) and MPEP § 708.02, Section IV: Applicant's Age must be accompanied by evidence showing that at least one of the applicants is 65 years of age, or more, such as a birth certificate or a statement by applicant. No fee is required

The instant petition includes a statement made by registered attorney Ray K. Shahani, which will be treated as the result of the attorney having evidence that at least one of the applicants is 65 years of age or more. In the event that such evidence is not with the attorney, the Office should be notified immediately. Accordingly, the above-identified application has been accorded "special" status.

Telephone inquiries concerning this decision should be directed to the undersigned at (571) 272-6735.

All other telephone inquiries should be directed to the Office of Data Management at (571) 272-4000.

This application is being referred back to the Office of Data Management for further processing. This application will be accorded "special" status when pre-examination processing is done.

/Diane C. Goodwyn/
Diane C. Goodwyn
Petitions Examiner
Office of Petitions

UNITED STATES PATENT AND TRADEMARK OFFICE

Commissioner for Patents
United States Patent and Trademark Office
P.O. Box 1450
Alexandria, VA 22313-1450
www.uspto.gov

BAE SYSTEMS
PO BOX 868
NHQ1-719
NASHUA NH 03061-0868

MAILED
DEC 12 2011
OFFICE OF PETITIONS

In re Application of
Ghanadan, Guan, Dehnie
Application No.: 13/177,587
Filed: July 7, 2011
Attorney Docket No: **BAEP-1307**
For: TRUST MANAGEMENT SYSTEM FOR DECISION FUSION IN NETWORKS AND METHOD FOR DECISION FUSION

: DECISION ACCORDING
: RULE 47(a) STATUS
:

This is in response to the petition under 37 CFR 1.47(a), filed November 18, 2011.

The petition is **GRANTED**.

The above-identified application and papers have been reviewed and found in compliance with 37 CFR 1.47(a). This application is hereby accorded Rule 1.47(a) status.

The above-cited application was filed on July 7, 2011, without an oath or declaration. A Notice to File Missing Parts of Nonprovisional Application was mailed on July 18, 2011, requiring an executed oath or declaration and surcharge. The notice allowed an extendable period for reply of two months from its mailing date. The instant petition was filed responsively on November 18, 2011, with a request for an extension of time within the second month.

Petitioner has shown that inventor Guanhas either constructively refused to join the filing of the above-identified application after having been presented with the application papers, or cannot be located. The above-identified application and papers have been reviewed and found in compliance with 37 CFR 1.47(a). This application is hereby accorded Rule 1.47(a) status.

As provided in Rule 1.47(c), this Office will forward notice of this application's filing to the non-signing inventor at the addresses given in the petition. Notice of the filing of this application will also be published in the Official Gazette.

Deposit account 19-0130 will be charged $200.00 for the instant petition fee.

This application will be forwarded to the Office of Patent Application Processing for further processing.

Telephone inquiries concerning this decision should be directed to the undersigned at (571) 272-3222.

/Kenya A. McLaughlin/

Kenya A. McLaughlin
Petitions Attorney
Office of Petitions

UNITED STATES PATENT AND TRADEMARK OFFICE

Commissioner for Patents
United States Patent and Trademark Office
P.O. Box 1450
Alexandria, VA 22313-1450

Kyle Guan
650 Rout 23 North
#2131
Wayne, NJ 07470

MAILED
DEC 12 2011
OFFICE OF PETITIONS

In re Application of :
Ghanadan, Guan, Dehnie :
Application No.: 13/177,587 : LETTER
Filed: July 7, 2011 :
Attorney Docket No: **BAEP-1307** :
For: TRUST MANAGEMENT SYSTEM FOR DECISION FUSION IN NETWORKS AND METHOD FOR DECISION FUSION

Dear Sir:

You are named as a joint inventor in the above-identified United States patent application filed under the provisions of 35 U.S.C. 116 (United States Code) and 37 CFR 1.47(a), Rules of Practice in Patent Cases. Should a patent be granted on the application you will be designated therein as a joint inventor.

As a joint inventor, you are entitled to inspect any paper in the file wrapper of the application, order copies of all or any part thereof (at a prepaid cost per 37 CFR 1.19) or make your position of record in the application. Alternatively, you may arrange to do any of the preceding through a registered patent attorney or agent presenting written authorization from you. If you care to join the application, counsel of record (see below) would presumably assist you. Joining in the application would entail the filing of an appropriate oath or declaration by you pursuant to 37 CFR 1.63.

Telephone inquiries regarding this communication should be directed to Petitions Attorney Kenya A. McLaughlin at (571) 272-3222. Requests for information regarding your application should be directed to the File Information Unit at (703) 308-2733. Information regarding how to pay for and order a copy of the application, or a specific paper in the application, should be directed to Certification Division at (703) 308-9726 or 1-800-972-6382 (outside the Washington D.C. area).

/Kenya A. McLaughlin/

Kenya A. McLaughlin
Petitions Attorney
Office of Petitions

BAE SYSTEMS
PO BOX 868
NHQ1-719
NASHUA NH 03061-0868

UNITED STATES PATENT AND TRADEMARK OFFICE

UNITED STATES DEPARTMENT OF COMMERCE
United States Patent and Trademark Office
Address: COMMISSIONER FOR PATENTS
P.O. Box 1450
Alexandria, Virginia 22313-1450
www.uspto.gov

APPLICATION NO.	FILING DATE	FIRST NAMED INVENTOR	ATTORNEY DOCKET NO.	CONFIRMATION NO.
13/177,607		Sang-ho BAE	BAES3001C/REF	6833

23364 7590 07/14/2011

BACON & THOMAS, PLLC
625 SLATERS LANE
FOURTH FLOOR
ALEXANDRIA, VA 22314-1176

EXAMINER	
ART UNIT	PAPER NUMBER
2629	

MAIL DATE	DELIVERY MODE
07/14/2011	PAPER

Please find below and/or attached an Office communication concerning this application or proceeding.

The time period for reply, if any, is set in the attached communication.

UNITED STATES PATENT AND TRADEMARK OFFICE

Commissioner for Patents
United States Patent and Trademark Office
P.O. Box 1450
Alexandria, VA 22313-1450
www.uspto.gov

BACON & THOMAS, PLLC
625 SLATERS LANE
FOURTH FLOOR
ALEXANDRIA VA 22314-1176

In re Application of
Sang-Ho BAE
Application No.: 13/177,607
Filed: 07 July 2011
Attorney Docket No.: BAES3001C/REF
For: TOUCH LOCATION DETECTING PANEL HAVING A SIMPLE LAYER STRUCTURE

: DECISION ON REQUEST TO
: PARTICIPATE IN THE PATENT
: PROSECUTION HIGHWAY
: PROGRAM AND PETITION
: TO MAKE SPECIAL UNDER
: 37 CFR 1.102(a)

This is a decision on the request to participate in the Patent Prosecution Highway (PPH) program and the petition under 37 CFR 1.102(a), filed 07 July 2011, to make the above-identified application special.

The request and petition are **GRANTED**.

Discussion

A grantable request to participate in the PPH program and petition to make special require:

1. The U.S. application is

   a. a Paris Convention application which either
      i. validly claims priority under 35 U.S.C. 119(a) and 37 CFR 1.55 to one or more applications filed in the KIPO, or
      ii. validly claims priority under 35 U.S.C. 119(a)/365(a) to a PCT application that contains no priority claims,

   or

   b. a national stage application under the PCT (an application which entered the national stage in the U.S. from a PCT international application after compliance with 35 U.S.C. 371), which PCT application
      i. validly claims priority under 35 U.S.C. 365(b) to an application filed in the KIPO, or
      ii. validly claims priority under 35 U.S.C. 365(b) to a PCT application that contains no priority claims, or
      iii. contains no priority claim,

   or

   c. a so-called bypass application filed under 35 U.S.C. 111(a) which validly claims benefit under 35 U.S.C. 120 to a PCT application, which PCT application

i. validly claims priority under 35 U.S.C. 365(b) to an application filed in the KIPO, or
ii. validly claims priority under 35 U.S.C. 365(b) to a PCT application that contains no priority claims, or
iii. contains no priority claim;

2. Applicant must submit a copy of:
   a. The allowable/patentable claim(s) from the KR application(s);
   b. An English translation of the allowable/patentable claim(s), and
   c. A statement that the English translation is accurate (if the claims were published in a language other than English);
3. Applicant must:
   a. Ensure that all the claims in the U.S. application must sufficiently correspond or be amended to sufficiently correspond to the allowable/patentable claim(s) in the KR application(s), and
   b. Submit a claims correspondence table in English;
4. Examination of the U.S. application has not begun;
5. Applicant must submit:
   a. A copy of all the office actions (which are relevant to patentability), excluding "Decision to Grant a Patent" from each of the KR application(s) containing the allowable/patentable claim(s);
   b. An English language translation of the KIPO office action; and
   c. A statement that the English translation is accurate (if the office actions are not in the English language);
6. Applicant must submit:
   a. An IDS listing the documents cited by the KIPO examiner in the KIPO office action (unless already filed in this application); and
   b. Copies of all the documents cited in the KIPO office action, except U.S. patents or U.S. patent application publications (unless already filed in this application);

The request to participate in the PPH program and petition comply with the above requirements. Accordingly, the above-identified application has been accorded "special" status.

Telephone inquiries concerning this decision should be directed to Lee W. Young at 571-272-4549.

All other inquiries concerning the examination or status of the application is accessible in the PAIR system at http://uspto.gov/ebc/index.html.

Lee W. Young
TQAS
Technology Center 2600

Doc Code: PET.GREEN
Document Description: Petition for Green Tech Pilot

PTO/SB/420 (03-11)

PETITION TO MAKE SPECIAL UNDER THE GREEN TECHNOLOGY PILOT PROGRAM

Attorney Docket Number: 249747	Application Number (if known): 13/177,634	Filing date: July 7, 2011

First Named Inventor: Aaron Yarbrough

Title: COMPRESSION MEMBER FOR WIND TURBINE ROTOR BLADES

APPLICANT HEREBY REQUESTS TO PARTICIPATE IN THE GREEN TECHNOLOGY PILOT PROGRAM FOR THE ABOVE-IDENTIFIED APPLICATION. See Instruction Sheet on page 2.

This petition must be timely filed electronically using the USPTO electronic filing system, EFS-Web.

1. By filing this petition:

   Applicant is requesting early publication: Applicant hereby requests early publication under 37 CFR 1.219 and the publication fee set forth in 37 CFR 1.18(d) accompanies this request.

2. By filing this petition: applicant is agreeing to make an election without traverse in a telephonic interview and elect an invention that meets the eligibility requirements for the Green Technology Pilot Program, if the Office determines that the claims are not obviously directed to a single invention. See Instruction Sheet.

3. This request is accompanied by statements of special status for the eligibility requirement.

4. The application contains no more than three (3) independent claims and twenty (20) total claims.

5. The application does not contain any multiple dependent claims.

6. Other attachments: Statement Concerning the Basis for the Special Status

Signature /Allison W. Mages/	Date October 19, 2011
Name (Print/Typed) Allison W. Mages	Registration Number 57,275

Note: Signatures of all the inventors or assignees of record of the entire interest or their representative(s) are required in accordance with 37 CFR 1.33 and 11.18. Please see 37 CFR 1.4(d) for the form of the signature. If necessary, submit multiple forms for more than one signature, see below.*

☐ *Total of _____ forms are submitted.

If you need assistance in completing the form, call 1-800-PTO-9199 and select option 2.

IN THE UNITED STATES PATENT AND TRADEMARK OFFICE

First Named Inventor: Aaron Yarbrough	)
Confirmation No.: 6893	)
	)
Serial No.: 13/177,634	)
	)
Filing Date: July 7, 2011	)
	)
Atty Docket No.: 249747	)

VIA EFS
Commissioner for Patents
P.O. Box 1450
Alexandria, VA 22313-1450

Statement Concerning the Basis for the Special Status

SIR:

The present application relates generally to wind turbines and, more particularly, to a compression member for a wind turbine rotor blade configured to provide increased buckling resistance during the performance of handling operations on the blade. (See [0001]).

Applicant respectfully submits that Special Status is sought on the basis that the present invention materially contributes to the discovery or development of renewable energy resources.

The undersigned representative may be contacted at the number below to facilitate the resolution of any matters. Please charge any fees that are incurred in connection with this Statement to deposit account no. 09-0470.

Respectfully submitted,

General Electric Company

By : /Allison W. Mages/
Allison W. Mages
Reg. No. 57,275

Dated: October 19, 2011

GE Global Patent Operation
2 Corporate Drive, Suite 648
Shelton, CT 06484
203-944-6730

UNITED STATES PATENT AND TRADEMARK OFFICE

UNITED STATES DEPARTMENT OF COMMERCE
United States Patent and Trademark Office
Address: COMMISSIONER FOR PATENTS
P.O. Box 1450
Alexandria, Virginia 22313-1450
www.uspto.gov

APPLICATION NO.	FILING DATE	FIRST NAMED INVENTOR	ATTORNEY DOCKET NO.	CONFIRMATION NO.
13/177,634	07/07/2011	Aaron Yarbrough	249747/GEC-349	6893

87853 7590 11/25/2011

Dority & Manning, PA and General Electric Company
Post Office Box 1449
Greenville, SC 29602

EXAMINER	
ART UNIT	PAPER NUMBER
3745	

MAIL DATE	DELIVERY MODE
11/25/2011	PAPER

Please find below and/or attached an Office communication concerning this application or proceeding.

The time period for reply, if any, is set in the attached communication.

UNITED STATES PATENT AND TRADEMARK OFFICE

Commissioner for Patents
United States Patent and Trademark Office
P.O. Box 1450
Alexandria, VA 22313-1450
www.uspto.gov

Dority & Manning, PA and General Electric Company
Post Office Box 1449
Greenville SC 29602

:

In re Application of		
YARBROUGH, AARON	:	DECISION ON PETITION
Application No. 13/177,634	:	TO MAKE SPECIAL UNDER
Filed: July 7, 2011	:	THE GREEN TECHNOLOGY
Attorney Docket No. 249747/GEC-349	:	PILOT PROGRAM

This is a decision on the petition under 37 CFR 1.102, filed October 19, 2011, to make the above-identified application special under the pilot program for applications pertaining to Green Technologies as set forth in 74 Federal Register Notice 64666 (December 8, 2009) and amended by 75 Federal Register Notice 28554 (May 21, 2010) and 75 Federal Register Notice 69049 (November 10, 2010).

The petition is **granted**.

A grantable petition to make an application special under 37 CFR 1.102 and the pilot program as set forth in 74 FR 64666 must be directed to a nonprovisional application filed under 35 USC 111(a) or be a national stage entry under 35 USC 371, exclusive of any reissue applications.

If reconsideration of this decision is desired, a petition for reconsideration must be filed within ONE (1) MONTH OR THIRTY (30) DAYS from the mail date of this decision, whichever is longer. No extension of this time limit can be granted under 37 CFR 1.136(a) or (b). The petition for reconsideration should include an exhaustive attempt to provide the lacking item(s) noted below, since, after a decision on the petition for reconsideration, no further reconsideration or review of the matter will be undertaken by the Director.

In order to qualify for special status, the following requirements must be met. 1) The application must have no more than 3 independent claims and no more than 20 total claims. 2) The application must not contain any multiple dependent claims. 3) The petition must state the basis for seeking special status, i.e., the claimed invention either: A) materially enhances the quality of the environment or B) materially contributes to: i) the discovery or development of renewable energy resources, ii) the more efficient utilization and conservation of energy resources, or iii) greenhouse gas emission reduction. 4) If the disclosure is not clear on its face that the claimed invention materially contributes under category (A) or (B), the petition must be accompanied by

a statement by the applicant, assignee, or an attorney/agent registered to practice before the Office explaining how the materiality standard is met. 5) A statement that applicant will agree to make an election without traverse in a telephonic interview if a restriction requirement is made by the examiner. 6) The petition to make special must be filed electronically. 7) The petition must be filed at least one day prior to the date that a first Office Action appears in the Patent Application Information Retrieval (PAIR) system. 8) The petition must be accompanied by a request for early publication in compliance with 37 CFR 1.219 and include the publication fee as set forth in 37 CFR 1.18(d).

The requirement for a fee for consideration of the petition to make special for applications pertaining to Green Technologies has been waived.

The instant petition complies with items 1 – 8 above. Accordingly, the above-identified application has been accorded "special" status.

Telephone inquires concerning this decision should be directed to Henry C. Yuen at 571-272-4856.

This application will be forwarded to the Technology Center Art Unit 3745 for action on the merits commensurate with this decision.

/Henry C. Yuen/

Henry C. Yuen
Quality Assurance Specialist
Technology Center TC 3700

UNITED STATES PATENT AND TRADEMARK OFFICE

UNITED STATES DEPARTMENT OF COMMERCE
United States Patent and Trademark Office
Address: COMMISSIONER FOR PATENTS
P.O. Box 1450
Alexandria, Virginia 22313-1450
www.uspto.gov

APPLICATION NO.	FILING DATE	FIRST NAMED INVENTOR	ATTORNEY DOCKET NO.	CONFIRMATION NO.
13/177,645	07/07/2011	Misa TAKAHASHI	27823Z	6911

23389 7590 11/18/2011

SCULLY SCOTT MURPHY & PRESSER, PC
400 GARDEN CITY PLAZA
SUITE 300
GARDEN CITY, NY 11530

EXAMINER	
ART UNIT	PAPER NUMBER
2486	

MAIL DATE	DELIVERY MODE
11/18/2011	PAPER

Please find below and/or attached an Office communication concerning this application or proceeding.

The time period for reply, if any, is set in the attached communication.

UNITED STATES PATENT AND TRADEMARK OFFICE

Commissioner for Patents
United States Patent and Trademark Office
P.O. Box 1450
Alexandria, VA 22313-1450
www.uspto.gov

Scully Scott Murphy & Presser, PC
400 GARDEN CITY PLAZA
SUITE 300
GARDEN CITY NY 11530

In re Application of: Misa Takahashi et al.
Application No. 13/177,645
Filed: July 7, 2011
For: **MEDICAL APPARATUS**

DECISION ON REQUEST TO PARTICIPATE IN PATENT PROSECUTION HIGHWAY PROGRAM AND PETITION TO MAKE SPECIAL UNDER 37 CFR 1.102(a)

MAILED

NOV 18 2011

DIRECTOR OFFICE
TECHNOLOGY CENTER 2400

This is a decision on the request to participate in the Patent Prosecution Highway (PPH) program and the petition under 37 CFR 1.102(a), filed October 7, 2011, to make the above-identified application special.

The petition is **DISMISSED.**

A grantable request to participate in the PPH program and petition to make special require:

1. The U.S. application for which participation in the PPH program is requested and the corresponding JPO application must have the same priority/filing date; In particular, the U.S. application (including national stage entry of a PCT application and a so-called bypass application filed under 35 U.S.C. § 111(a) which validly claims benefit under 35 U.S.C. § 120 to a PCT application):

   (a) is an application that validly claims priority under 35 U.S.C. § 119(a) and 37 CFR 1.55 to one or more applications filed with JPO,

   or

   (b) is an application which is the basis of a valid priority claim under the Paris Convention for the application filed in JPO,

   or

   (c) is an application which shares a common priority document with the application filed in JPO,

   or

   (d) and the JPO application are derived from/related to a PCT application having no priority claim.

2. Applicant must submit a copy of:
    a. The allowable/patentable claim(s) from the JPO application(s);
    b. An English translation of the allowable/patentable claim(s); and
    c. A statement that the English translation is accurate;

3. Applicant must
    a. Ensure all the claims in the U.S. application must sufficiently correspond or be amended to sufficiently correspond to one or more of those claims indicated as allowable/patentable claim(s) in the JPO application(s). Claims are considered to "sufficiently correspond" where, accounting for differences due to translations and claim format, the claims in the USPTO are of the same or similar scope as the claims in the JPO, or the claims in the USPTO are narrower in scope than the claims in the JPO. In this regard, a claim that is narrower in scope occurs when a JPO claim is amended to be further limited by an additional feature that is supported in the specification (description and/or claims). A claim in the USPTO which introduces a new/different category of claims to those claims indicated as allowable in the JPO is not considered to sufficiently correspond. For example, if the JPO claims only contain claims to a process of manufacturing a product, then the claims in the USPTO are not considered to sufficiently correspond if the USPTO claims introduce product claims that are dependent on the corresponding process claims; and

    b. Submit a claims correspondence table in English;

4. Examination of the U.S. application has not begun;

5. Applicant must submit:
    a. Documentation of prior office action:
        i. a copy of the office action(s) just prior to the "Decision to Grant a Patent" from each of the JPO application(s) containing the allowable/patentable claim(s) or
        ii. if the allowable/patentable claims(s) are from a "Notification of Reasons for Refusal" then the Notification of Reasons for Refusal or
        iii. if the JPO application is a first action allowance then no office action from the JPO is necessary should be indicated on the request/petition form;
    b. An English language translation of the JPO Office action from (5)(a)(i)-(ii) above
    c. A statement that the English translation is accurate (if the translation is not a machine translation provided by the JPO);

6. Applicant must submit:
    a. An IDS listing the documents cited by the JPO examiner in the JPO office action (unless already submitted in this application)
    b. Copies of the documents except U.S. patents or U.S. patent application publications (unless already submitted in this application).

Conditions (1-4) and (6) above are considered to have been met. However, the request to participate in the PPH pilot program and petition fails to meet condition (5).

Regarding the requirement of condition (5), applicant has failed to submit a copy of the latest JPO office action. Note that box 1(a) of the PPH request form PTO/SB20JP, filed October 7, 2011, indicates that the JPO office action is attached.

Applicant is given **ONE** opportunity within a time period of **ONE MONTH or THIRTY DAYS**, whichever is longer, from the mailing date of this decision to correct the deficiencies. **NO EXTENSION OF TIME UNDER 37 CFR 1.136 IS PERMITTED.** If the deficiencies are not corrected with the time period given, the application will await action in its regular turn.

Response must be filed via the Electronic Filing System (EFS) using the document description: Petition to make special under Patent Pros Hwy. Any preliminary amendments and IDS submitted with the PPH documents must be separately indexed as a preliminary amendment and IDS, respectively.

Telephone inquiries concerning this decision should be directed to Christopher Grant at 571-272-7294.

All other inquiries concerning the examination or status of the application is accessible in the PAIR system at http://www.uspto.gov/ebc/index.html.

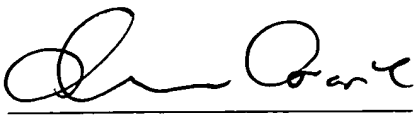

Christopher Grant
Quality Assurance Specialist
Technology Center 2400

UNITED STATES PATENT AND TRADEMARK OFFICE

Commissioner for Patents
United States Patent and Trademark Office
P.O. Box 1450

MAILED
JAN 17 2012
OFFICE OF PETITIONS

SCULLY SCOTT MURPHY & PRESSER, PC
400 GARDEN CITY PLAZA
SUITE 300
GARDEN CITY NY 11530

In re Application of
Misa TAKAHASHI et al.
Application No. 13/177,645
Filed: July 7, 2011
Atty. Docket No.: 27823Z
For: MEDICAL APPARATUS

: DECISION ON REQUEST TO
: PARTICIPATE IN PPH PROGRAM
: AND PETITION TO MAKE SPECIAL
: UNDER 37 CFR 1.102(a)
:

This is a decision on the renewed request to participate in the Patent Prosecution Highway (PPH) program and the petition under 37 CFR 1.102(a), filed December 1, 2011 to make the above-identified application special.

The petition is **GRANTED**.

A grantable request to participate in the PPH (patent prosecution highway) program and petition to make special require:

(1) the U.S. application is a Paris Convention application which either validly claims priority under 35 U.S.C. 119(a) and 37 CFR 1.55 to one or more applications filed in the JPO (Japanese Patent Office) or claims priority to a PCT application that contains no priority claims. Alternatively, it can be a national stage application under the PCT which validly claims priority to an application filed in the JPO or claims priority to a PCT application that contains no priority claims. It can also be a "bypass application" filed under 35 U.S.C. 111(a) which validly claims benefit under 35 U.S.C. 120 to a PCT application, which PCT application validly claims priority to an application filed in the JPO or claims priority to a PCT application that contains no priority claims, or contains no priority claim;

(2) applicant must submit a copy of the allowable/patentable claim(s) from the JPO application(s) along with an English translation thereof and a statement that the English translation is accurate;

(3) all the claims in the U.S. application must sufficiently correspond or be amended to sufficiently correspond to the allowable/patentable claim(s) in the JPO application(s);

(4) examination of the U.S. application has not begun;

(5) applicant must submit a copy of all the office actions from each of the JPO application(s) containing the allowability/patentable claim(s) along with an English translation thereof and a statement that the English translation is accurate; and

(6) applicant must submit an IDS listing the documents cited by the JPO examiner in the JPO office action along with copies of documents except U.S. patents or U.S. patent application publications.

The request to participate in the PPH program and petition comply with the above requirements. Accordingly, the above-identified application has been accorded "special" status.

Telephone inquiries concerning this decision should be directed to Robert DeWitty, Petition Attorney, Office of Petitions at 571-272-8427.

All other inquiries concerning the examination or status of the application is accessible in the PAIR system at http://www.uspto.gov/ebc/index.html.

This application will be forwarded to Technology Center Art Unit 2486 for action on the merits commensurate with this decision once this application's formality reviews have been completed.

David Bucci
Petitions Examiner
Office of Petitions

UNITED STATES PATENT AND TRADEMARK OFFICE

UNITED STATES DEPARTMENT OF COMMERCE
United States Patent and Trademark Office
Address: COMMISSIONER FOR PATENTS
P.O. Box 1450
Alexandria, Virginia 22313-1450
www.uspto.gov

APPLICATION NO.	FILING DATE	FIRST NAMED INVENTOR	ATTORNEY DOCKET NO.	CONFIRMATION NO.
13/177,663	07/07/2011	Mark S. Andrekovich	07948.0089-01000	6946

22852 7590 08/11/2011

FINNEGAN, HENDERSON, FARABOW, GARRETT & DUNNER LLP
901 NEW YORK AVENUE, NW
WASHINGTON, DC 20001-4413

EXAMINER	
ZAGARELLA, STEPHANIE R	
ART UNIT	**PAPER NUMBER**
3623	
MAIL DATE	**DELIVERY MODE**
08/11/2011	PAPER

Please find below and/or attached an Office communication concerning this application or proceeding.

The time period for reply, if any, is set in the attached communication.

UNITED STATES PATENT AND TRADEMARK OFFICE

AUG 11 2011

Commissioner for Patents
United States Patent and Trademark Office
P.O. Box 1450
Alexandria, VA 22313-1450
www.uspto.gov

FINNEGAN, HENDERSON, FARABOW,
GARRETT & DUNNER LLP
901 New York Avenue, NW
Washington, DC 20001

In re application of:
Mark S. ANDREKOVICH et al.
Application No. 13/177663
Filed: July 7, 2011
For: METHOD AND SYSTEM FOR MATCHING EMPLOYERS WITH JOB-SEEKING INDIVIDUALS

: **DECISION ON PETITION**
: **TO MAKE SPECIAL FOR**
: **NEW APPLICATION**
UNDER 37 CFR 1.102

This is a decision on the petition filed on July 7, 2011 to make the above-identified application special for accelerated examination procedure under 37 C.F.R. § 1.102(d).

The petition to make the application special is **DISMISSED**.

REGULATION AND PRACTICE

A grantable petition to make special under 37 C.F.R. § 1.102(d) and pursuant to the "Change to Practice for Petitions in Patent Applications to Make Special and for Accelerated Examination" published in the Federal Register on June 26, 2006 (71 Fed. Reg. 36323), must satisfy the following conditions:

I. Conditions Regarding the Application:

1. the application must be a non-reissue utility or design application filed under 37 CFR 1.111(a);

2. the application, the petition and the required fees must be filed electronically using the USPTO's electronic filing system (EFS), or EFS-web; if not filed electronically, a statement asserting that EFS and EFS-web were not available during the normal business hours.

3. at the time of filing, the application must be complete under 37 CFR 1.51 and in condition for examination;

4. the application must contain three or fewer independent claims and twenty or fewer total claims and the claims must be directed to a single invention.

II. Conditions Regarding the Petition:

The petition must:

1. be filed with the application;

2. include a statement that applicant agrees not to separately argue the patentability of any independent claim during any appeal in the application;

3. include a statement that applicant agrees to make an election without traverse in a telephone interview.

4. include a statement that applicant agrees to conduct such an interview when requested by the examiner.

5. include a statement, made based on a good faith belief, that a preexamination search in compliance with the following requirements, was conducted, including an identification of the field of search by United States class and subclass, where applicable, and for database searches, the search logic or chemical structure or sequence used as a query, the name of the file(s) searched and the database service, and the date of the search.

The preexamination search must:

5.1 involve U.S. patents and patent application publications, foreign patent documents, and non-patent literature, unless the applicant can justify with reasonable certainty that no references more pertinent than those already identified are likely to be found in the eliminated sources and includes such a justification with this statement;

5.2. be directed to the claimed invention and encompass all of the features of the claims, giving the claims the broadest reasonable expectation;

5.3. encompass the disclosed features that may be claimed.

6. must provide in support of the petition an accelerated examination support document.

An accelerated examination support document must include:

6.1. an information disclosure statement (IDS) in compliance with 37 CFR 1.98 citing each reference deemed most closely related to the subject matter of each of the claims;

6.2. an identification of all the limitations in the claims that are disclosed by the reference specifying where the limitation is disclosed in the cited reference;

6.3. a detailed explanation of how each of the claims are patentable over the references cited with particularity required by 37 CFR 1.111(b) and (c);

6.4. a concise statement of the utility of the invention as defined in each of the independent claims (unless the application is a design application);

6.5. a showing of where each limitation of the claims finds support under 35 USC 112, first paragraph, in the written description of the specification. If applicable, the showing must also identify: (1) each means- (or step) plus-function claim element that invokes consideration under 35 USC 112, sixth paragraph; and (2) the structure, material, or acts in the specification that corresponds to each means- (or step) plus-function claim element that invokes consideration under 35 USC 112, sixth paragraph; if the application claims the benefit of one or more applications under title 35, United States Code, the showing must also include where each limitation of the claims finds support under 35 USC 112, first paragraph, in each such application in which such supports exists;

6.6. an identification of any cited references that may be disqualified under 35 USC 103(c).

REVIEW OF FACTS

The petition fails to comply with conditions II.6.3 and II.6.5.

As to condition II.6.3, there is not a satisfactory detailed explanation of claim patentability over each of the references. The explanation needs to specify how each of the claims are patentable over each of the cited references, which includes the need to specify whether each of the dependent claims are separately patentable beyond the limitations contained in the independent claims, and if so how, or a statement made that the dependent claims are not separately patentable. While the explanation provided for the independent claims appears to be acceptable, as well as the explanation for dependent claims 2, 3, 5, 7, 11, 12, and 15-16, Applicant has not specified whether dependent claims 4, 8-10, 13, and 17 are separately patentable beyond the limitations contained in the independent claims, and if so how, or a statement made that the dependent claims are not separately patentable. It is noted that the duplicative listing of claim 14 with the dependent claims appears to be in error.

As to condition to II.6.5, the showing of where each limitation of each of the claims finds support under 35 USC 112 in the written description of the specification of the application is insufficient. While the showing of support in the written description of the specification of the current application is sufficient, as well is the showing of support for parent application 12/487981, similar support has not been shown for provisional application 61/202329, to which the current application claims benefit. Such support (if any) for the claimed invention must additionally be shown in any parent application upon which priority is claimed under 35 USC 119. Specifically, it is necessary to provide a listing of where each of the limitations of the claims find support in provisional application 61/202329.

Therefore, the petition fails to meet the required conditions to be accorded special status under the accelerated examination procedure.

DECISION

For the above-stated reasons, the petition is **DISMISSED**. The application will therefore be taken up by the examiner for action in its regular turn.

Petitioner is given a single opportunity to perfect the petition. Any request for reconsideration of this decision must be submitted within 1 (one) month or 30 (thirty) days, whichever is longer, (no extension of time under 37 CFR 1.136(a)) from the date of this decision in order to be considered timely. Any request for reconsideration must address the deficiencies indicated above.

Petitioner is reminded that, upon granting of the special status of the application on request for reconsideration, the application will be processed expeditiously. However, due to the dismissal of the instant petition, examination may not be completed within twelve months of the filing date of the application.

Any inquiry regarding this decision should be directed to Robert Weinhardt, Business Practice Specialist, at (571) 272-6633.

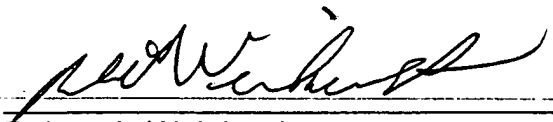

Robert A. Weinhardt,
Business Practice Specialist
Technology Center 3600

RW/bvb: 8/9/11

UNITED STATES PATENT AND TRADEMARK OFFICE

UNITED STATES DEPARTMENT OF COMMERCE
United States Patent and Trademark Office
Address: COMMISSIONER FOR PATENTS
P.O. Box 1450
Alexandria, Virginia 22313-1450
www.uspto.gov

APPLICATION NO.	FILING DATE	FIRST NAMED INVENTOR	ATTORNEY DOCKET NO.	CONFIRMATION NO.
13/177,663	07/07/2011	Mark S. Andrekovich	07948.0089-01000	6946

22852 7590 12/14/2011

FINNEGAN, HENDERSON, FARABOW, GARRETT & DUNNER LLP
901 NEW YORK AVENUE, NW
WASHINGTON, DC 20001-4413

EXAMINER	
DELICH, STEPHANIE ZAGARELLA	
ART UNIT	PAPER NUMBER
3623	
MAIL DATE	DELIVERY MODE
12/14/2011	PAPER

Please find below and/or attached an Office communication concerning this application or proceeding.

The time period for reply, if any, is set in the attached communication.

UNITED STATES PATENT AND TRADEMARK OFFICE

Commissioner for Patents
United States Patent and Trademark Office
P.O. Box 1450
Alexandria, VA 22313-1450
www.uspto.gov

DEC 14 2011

FINNEGAN, HENDERSON, FARABOW,
GARRETT & DUNNER LLP
901 NEW YORK AVENUE, NW
WASHINGTON DC 20001-4413

In re application of:
ANDREKOVICH, Mark S., et al.
Application No.: 13/177,663
Filed: July 7, 2011
For: METHOD AND SYSTEM FOR MATCHING EMPLOYERS WITH JOB-SEEKING INDIVIDUALS

: **DECISION ON PETITION**
: **TO MAKE SPECIAL FOR**
: **NEW APPLICATION**
: **UNDER 37 CFR 1.102**

This is a decision on the petition filed on July 7, 2011, and the request for reconsideration and revised support document filed September 8, 2011, to make the above-identified application special for accelerated examination procedure under 37 C.F.R. § 1.102(d).

The petition to make the application special is **GRANTED**.

The application is eligible for accelerated examination and the petition complies with the conditions for granting the application special status pursuant to the "Change to Practice for Petitions in Patent Applications to Make Special and for Accelerated Examination" published June 26, 2006, in the Federal Register. (71 Fed. Reg. 36323).

The prosecution of the instant application will be conducted expeditiously according to the following guidelines.

1. The application will be docketed to an examiner and taken up for action within two weeks of the date of this decision.

2. Restriction Practice:
If the examiner determines that the claims are not directed to a single invention, a telephone request to elect one single invention will be made pursuant to MPEP 812.01. As a prerequisite to the grant of this petition, the applicant has agreed to make an oral

election, by telephone, without traverse. If the applicant refuses to make an election without traverse, or the examiner cannot reach the applicant after a reasonable effort, the examiner will treat the first claimed invention (invention defined by claim 1) as having being constructively elected without traverse for examination.

3. Office action:
   If it is determined that, after appropriate consultation, there is a potential rejection or any other issue to be addressed, the examiner will telephone the applicant and arrange an interview to discuss and resolve the issue. An Office action, other than a Notice of Allowance and Fee(s) Due (Notice of Allowance), will not be issued unless either: 1) an interview was conducted but did not result in agreed to action that places the application in condition for allowance, or, 2) a determination is made that an interview would be unlikely to result in the application being placed in condition for allowance, and 3) an internal conference has been held to review any rejection of any claim.

4. Time for Reply:
   An Office action other than a Notice of Allowance or a final Office action will set a shortened statutory period of one month or thirty days, whichever is longer, for reply with no extension of time available under 37 CFR 1.136(a). Failure to timely file a reply within this non-extendible period for reply will result in the abandonment of the application.

5. Reply by Applicant:
   A timely reply to an Office action other than the Notice of Allowance must be submitted electronically via EFS or EFS-web and limited to addressing the rejections, objections and requirement made. Any amendment that attempts to: 1) add claims which would result in more than three pending independent claims or more than twenty pending total claims; 2) present claims not encompassed by the pre-examination search or an updated accelerated examination support document; or 3) present claims that are directed to a non-elected invention or an invention other than that previously claimed and examined in the application, will be treated as not fully responsive and will not be entered.

   For any amendment to the claims (including any new claim) that is not encompassed by the accelerated examination support document, applicant must provide an updated accelerated examination support document that encompasses the amended or new claims at the time of filing of the amendment.

To proceed expeditiously with the examination, it is recommended that a reply with amendments made to any claim or with any new claim being added be accompanied by an updated accelerated examination support document or a statement explaining how the amended or new claim is supported by the original accelerated examination support document.

6. Information Disclosure Statement (IDS):
   Any IDS filed during prosecution must be submitted electronically via EFS or EFS-web, accompanied by an updated accelerated examination support document, and be in compliance with 37 CFR 1.97 and 1.98.

7. Post-Allowance Processing:
   To expedite processing of the allowed application into a patent, the applicant must: 1) pay the required fees within one month of the date of the Notice of Allowance, and 2) not file any post allowance papers not required by the Office. In no event may the issue fee be paid and accepted later than three months from the date of the Notice of Allowance.

8. After-Final and Appeal Procedures:
   To expedite prosecution, after receiving the final Office action, applicant must: 1) promptly file a notice of appeal, an appeal brief and appeal fees; and 2) not request a pre-appeal brief conference.

   Any amendment, affidavit or other evidence filed after final Office action must comply with applicable rules and the requirements outlined in numbered paragraphs 5 and 6 above.

   On appeal, the application will proceed according to normal appeal procedures. After appeal, the application will again be treated special.

9. Proceedings Outside the Normal Examination Process:
   If the application becomes involved in a proceeding that is outside the normal examination process (e.g., a secrecy order, national security review, interference proceeding, petitions under 37 CFR 1.181, 182 or 183), the application will be treated special before and after such proceeding.

10. Final Disposition:
    The twelve month goal of this accelerated examination procedure ends with a final disposition. The mailing of a final Office action, a Notice of Allowance, the filing of a Notice of Appeal, or the filing of a Request for Continued Examination (RCE) is the final disposition.

If, during prosecution, a paper is not filed electronically using EFS-web, a reply is filed but is not fully responsive, the application is involved in an appeal, or a proceeding outside normal examination process, the application will still be examined expeditiously, however, the final disposition may occur more than twelve months from the filing of the application.

Any inquiry regarding this decision should be directed to Robert Weinhardt, Business Practice Specialist, at (571) 272-6633.

Robert Weinhardt
Business Practice Specialist
Technology Center 3600

RW/12/13/11

Doc code : PET.OP.AGE
Description : Petition to make special based on Age/Health

PTO/SB/130 (07-09)
Approved for use through 07/31/2012. OMB 0651- 0031
U.S. Patent and Trademark Office; U.S. DEPARTMENT OF COMMERCE
Under the Paperwork Reduction Act of 1995, no persons are required to respond to a collection of information unless it contains a valid OMB control number

PETITION TO MAKE SPECIAL BASED ON AGE FOR ADVANCEMENT OF EXAMINATION UNDER 37 CFR 1.102(c)(1)

Application Information

Application Number	13177811	Confirmation Number	7210	Filing Date	2011-07-07
Attorney Docket Number (optional)	A-75272-2	Art Unit		Examiner	
First Named Inventor	Carl P. Schaffner				
Title of Invention	Method of Removing Ticks from the Skin and Reducing the Risk of Bites				

Attention: Office of Petitions
An application may be made special for advancement of examination upon filing of a petition showing that the applicant is 65 years of age, or more. No fee is required with such a petition. See 37 CFR 1.102(c)(1) and MPEP 708.02 (IV).

APPLICANT HEREBY PETITIONS TO MAKE SPECIAL FOR ADVANCEMENT OF EXAMINATION IN THIS APPLICATION UNDER 37 CFR 1.102(c)(1) and MPEP 708.02 (IV) ON THE BASIS OF THE APPLICANT'S AGE.

A grantable petition requires one of the following items:
(1) Statement by one named inventor in the application that he/she is 65 years of age, or more; or
(2) Certification by a registered attorney/agent having evidence such as a birth certificate, passport, driver's license, etc. showing one named inventor in the application is 65 years of age, or more.

Name of Inventor who is 65 years of age, or older

Given Name	Middle Name	Family Name	Suffix
Carl	P.	Schaffner	

A signature of the applicant or representative is required in accordance with 37 CFR 1.33 and 10.18. Please see 37 CFR 1.4(d) for the format of the signature.

Select (1) or (2) :

○ (1) I am an inventor in this application and I am 65 years of age, or more.

● (2) I am an attorney or agent registered to practice before the Patent and Trademark Office, and I certify that I am in possession of evidence, and will retain such in the application file record, showing that the inventor listed above is 65 years of age, or more.

Signature	/Edward S. Wright/	Date (YYYY-MM-DD)	2011-07-07
Name	Edward S. Wright	Registration Number	24903

PTO/SB/130 (07-09)
Approved for use through 07/31/2012. OMB 0651- 0031
U.S. Patent and Trademark Office; U.S. DEPARTMENT OF COMMERCE
Under the Paperwork Reduction Act of 1995, no persons are required to respond to a collection of information unless it contains a valid OMB control number

Privacy Act Statement

The Privacy Act of 1974 (P.L. 93-579) requires that you be given certain information in connection with your submission of the attached form related to a patent application or patent. Accordingly, pursuant to the requirements of the Act, please be advised that: (1) the general authority for the collection of this information is 35 U.S.C. 2(b)(2); (2) furnishing of the information solicited is voluntary; and (3) the principal purpose for which the information is used by the U.S. Patent and Trademark Office is to process and/or examine your submission related to a patent application or patent. If you do not furnish the requested information, the U.S. Patent and Trademark Office may not be able to process and/or examine your submission, which may result in termination of proceedings or abandonment of the application or expiration of the patent.

The information provided by you in this form will be subject to the following routine uses:

1. The information on this form will be treated confidentially to the extent allowed under the Freedom of Information Act (5 U.S.C. 552) and the Privacy Act (5 U.S.C. 552a). Records from this system of records may be disclosed to the Department of Justice to determine whether the Fr eedom of Information Act requires disclosure of these records.

2. A record from this system of records may be disclosed, as a routine use, in the course of presenting evidence to a court, magistrate, or administrative tribunal, including disclosures to opposing counsel in the course of settlement negotiations.

3. A record in this system of records may be disclosed, as a routine use, to a Member of Congress submitting a request involving an individual, to whom the record pertains, when the individual has requested assistance from the Member with respect to the subject matter of the record.

4. A record in this system of records may be disclosed, as a routine use, to a contractor of the Agency having need for the information in order to perform a contract. Recipients of information shall be required to comply with the requirements of the Privacy Act of 1974, as amended, pursuant to 5 U.S.C. 552a(m).

5. A record related to an International Application filed under the Patent Cooperation Treaty in this system of records may be disclosed, as a routine use, to the International Bureau of the World Intellectual Property Organization, pursuant to the Patent Cooperation Treaty.

6. A record in this system of records may be disclosed, as a routine use, to another federal agency for purposes of National Security review (35 U.S.C. 181) and for review pursuant to the Atomic Energy Act (42 U.S.C. 218(c)).

7. A record from this system of records may be disclosed, as a routine use, to the Administrator, General Services, or his/her designee, during an inspection of records conducted by GSA as part of that agency's responsibility to recommend improvements in records management practices and programs, under authority of 44 U.S.C. 2904 and 2906. Such disclosure shall be made in accordance with the GSA regulations governing inspection of records for this purpose, and any other relevant (i.e., GSA or Commerce) directive. Such disclosure shall not be used to make determinations about indivi duals.

8. A record from this system of records may be disclosed, as a routine use, to the public after either publication of the application pursuant to 35 U.S.C. 122(b) or issuance of a patent pursuant to 35 U.S.C. 151. Further, a record may be disclosed, subject to the limitations of 37 CFR 1.14, as a routine use, to the public if the record was filed in an application which became abandoned or in which the proceedings were terminated and which application is referenced by either a published application, an application open to public inspections or an issued patent.

9. A record from this system of records may be disclosed, as a routine use, to a Federal, State, or local law enforcement agency, if the USPTO becomes aware of a violation or potential violation of law or regulation.

UNITED STATES PATENT AND TRADEMARK OFFICE

Commissioner for Patents
United States Patent and Trademark Office
P.O. Box 1450
Alexandria, VA 22313-1450
www.uspto.gov

In re Application of
Carl P. Schaffner

Application No. 13177811

Filed:

Attorney Docket No. A-75272-2

:
:
:DECISION ON PETITION TO MAKE SPECIAL
:UNDER 37 CFR 1.102(c)(1)
:

This is a decision on the electronic petition under 37 CFR 1.102 (c)(1), filed 07-JUL-2011 to make the above-identified application special based on applicant's age as set forth in MPEP § 708.02, Section IV.

The petition is **GRANTED**.

A grantable petition to make an application special under 37 CFR 1.102(c)(1), MPEP § 708.02, Section IV: Applicant's Age must include a statement by applicant or a registered practitioner having evidence that applicant is at least 65 years of age. No fee is required.

Accordingly, the above-identified application has been accorded "special" status and will be taken up for action by the examiner upon the completion of all pre-examination processing.

Telephone inquiries concerning this electronic decision should be directed to the Electronic Business Center at 866-217-9197.

All other inquiries concerning either the examination or status of the application should be directed to the Technology Center.

Doc code : PET.OP.AGE
Description : Petition to make special based on Age/Health

PTO/SB/130 (07-09)
Approved for use through 07/31/2012. OMB 0651- 0031
U.S. Patent and Trademark Office; U.S. DEPARTMENT OF COMMERCE
Under the Paperwork Reduction Act of 1995, no persons are required to respond to a collection of information unless it contains a valid OMB control number

PETITION TO MAKE SPECIAL BASED ON AGE FOR ADVANCEMENT OF EXAMINATION UNDER 37 CFR 1.102(c)(1)

Application Information

Application Number	13/177,827	Confirmation Number	7241	Filing Date	2011-07-07
Attorney Docket Number (optional)	00130-1US	Art Unit		Examiner	
First Named Inventor	Marshall MEDOFF				
Title of Invention	PROCESSING BIOMASS				

Attention: Office of Petitions
An application may be made special for advancement of examination upon filing of a petition showing that the applicant is 65 years of age, or more. No fee is required with such a petition. See 37 CFR 1.102(c)(1) and MPEP 708.02 (IV).

APPLICANT HEREBY PETITIONS TO MAKE SPECIAL FOR ADVANCEMENT OF EXAMINATION IN THIS APPLICATION UNDER 37 CFR 1.102(c)(1) and MPEP 708.02 (IV) ON THE BASIS OF THE APPLICANT'S AGE.

A grantable petition requires one of the following items:
(1) Statement by one named inventor in the application that he/she is 65 years of age, or more; or
(2) Certification by a registered attorney/agent having evidence such as a birth certificate, passport, driver's license, etc. showing one named inventor in the application is 65 years of age, or more.

Name of Inventor who is 65 years of age, or older

Given Name	Middle Name	Family Name	Suffix
Marshall		MEDOFF	

A signature of the applicant or representative is required in accordance with 37 CFR 1.33 and 10.18.
Please see 37 CFR 1.4(d) for the format of the signature.

Select (1) or (2) :

○ (1) I am an inventor in this application and I am 65 years of age, or more.

● (2) I am an attorney or agent registered to practice before the Patent and Trademark Office, and I certify that I am in possession of evidence, and will retain such in the application file record, showing that the inventor listed above is 65 years of age, or more.

Signature	/Celia H. Leber/	Date (YYYY-MM-DD)	2011-07-12
Name	Celia H. Leber	Registration Number	33524

PTO/SB/130 (07-09)
Approved for use through 07/31/2012. OMB 0651- 0031
U.S. Patent and Trademark Office; U.S. DEPARTMENT OF COMMERCE
Under the Paperwork Reduction Act of 1995, no persons are required to respond to a collection of information unless it contains a valid OMB control number

Privacy Act Statement

The Privacy Act of 1974 (P.L. 93-579) requires that you be given certain information in connection with your submission of the attached form related to a patent application or patent. Accordingly, pursuant to the requirements of the Act, please be advised that: (1) the general authority for the collection of this information is 35 U.S.C. 2(b)(2); (2) furnishing of the information solicited is voluntary; and (3) the principal purpose for which the information is used by the U.S. Patent and Trademark Office is to process and/or examine your submission related to a patent application or patent. If you do not furnish the requested information, the U.S. Patent and Trademark Office may not be able to process and/or examine your submission, which may result in termination of proceedings or abandonment of the application or expiration of the patent.

The information provided by you in this form will be subject to the following routine uses:

1. The information on this form will be treated confidentially to the extent allowed under the Freedom of Information Act (5 U.S.C. 552) and the Privacy Act (5 U.S.C. 552a). Records from this system of records may be disclosed to the Department of Justice to determine whether the Fr eedom of Information Act requires disclosure of these records.

2. A record from this system of records may be disclosed, as a routine use, in the course of presenting evidence to a court, magistrate, or administrative tribunal, including disclosures to opposing counsel in the course of settlement negotiations.

3. A record in this system of records may be disclosed, as a routine use, to a Member of Congress submitting a request involving an individual, to whom the record pertains, when the individual has requested assistance from the Member with respect to the subject matter of the record.

4. A record in this system of records may be disclosed, as a routine use, to a contractor of the Agency having need for the information in order to perform a contract. Recipients of information shall be required to comply with the requirements of the Privacy Act of 1974, as amended, pursuant to 5 U.S.C. 552a(m).

5. A record related to an International Application filed under the Patent Cooperation Treaty in this system of records may be disclosed, as a routine use, to the International Bureau of the World Intellectual Property Organization, pursuant to the Patent Cooperation Treaty.

6. A record in this system of records may be disclosed, as a routine use, to another federal agency for purposes of National Security review (35 U.S.C. 181) and for review pursuant to the Atomic Energy Act (42 U.S.C. 218(c)).

7. A record from this system of records may be disclosed, as a routine use, to the Administrator, General Services, or his/her designee, during an inspection of records conducted by GSA as part of that agency's responsibility to recommend improvements in records management practices and programs, under authority of 44 U.S.C. 2904 and 2906. Such disclosure shall be made in accordance with the GSA regulations governing inspection of records for this purpose, and any other relevant (i.e., GSA or Commerce) directive. Such disclosure shall not be used to make determinations about indivi duals.

8. A record from this system of records may be disclosed, as a routine use, to the public after either publication of the application pursuant to 35 U.S.C. 122(b) or issuance of a patent pursuant to 35 U.S.C. 151. Further, a record may be disclosed, subject to the limitations of 37 CFR 1.14, as a routine use, to the public if the record was filed in an application which became abandoned or in which the proceedings were terminated and which application is referenced by either a published application, an application open to public inspections or an issued patent.

9. A record from this system of records may be disclosed, as a routine use, to a Federal, State, or local law enforcement agency, if the USPTO becomes aware of a violation or potential violation of law or regulation.

UNITED STATES PATENT AND TRADEMARK OFFICE

Commissioner for Patents
United States Patent and Trademark Office
P.O. Box 1450
Alexandria, VA 22313-1450
www.uspto.gov

In re Application of
Marshall Medoff

Application No. 13177827

Filed:

Attorney Docket No. 00130-1US

:DECISION ON PETITION TO MAKE SPECIAL
:UNDER 37 CFR 1.102(c)(1)

This is a decision on the electronic petition under 37 CFR 1.102 (c)(1), filed 12-JUL-2011 to make the above-identified application special based on applicant's age as set forth in MPEP § 708.02, Section IV.

The petition is **GRANTED**.

A grantable petition to make an application special under 37 CFR 1.102(c)(1), MPEP § 708.02, Section IV: Applicant's Age must include a statement by applicant or a registered practitioner having evidence that applicant is at least 65 years of age. No fee is required.

Accordingly, the above-identified application has been accorded "special" status and will be taken up for action by the examiner upon the completion of all pre-examination processing.

Telephone inquiries concerning this electronic decision should be directed to the Electronic Business Center at 866-217-9197.

All other inquiries concerning either the examination or status of the application should be directed to the Technology Center.

Doc Code: PET.GREEN
Document Description: Petition for Green Tech Pilot

PTO/SB/420 (03-11)

PETITION TO MAKE SPECIAL UNDER THE GREEN TECHNOLOGY PILOT PROGRAM

Attorney Docket Number: 226773-1 (GECZ201012US01)	Application Number (if known): 13/177,894	Filing date: 07-07-2011

First Named Inventor: Jonathan D. NELSON

Title: HYBRID ELECTRIC WATER HEATER WITH EXTERNAL DISCHAGE DUCTING

APPLICANT HEREBY REQUESTS TO PARTICIPATE IN THE GREEN TECHNOLOGY PILOT PROGRAM FOR THE ABOVE-IDENTIFIED APPLICATION. See Instruction Sheet on page 2.

This petition must be timely filed electronically using the USPTO electronic filing system, EFS-Web.

1. By filing this petition:

   Applicant is requesting early publication: Applicant hereby requests early publication under 37 CFR 1.219 and the publication fee set forth in 37 CFR 1.18(d) accompanies this request.

2. By filing this petition: applicant is agreeing to make an election without traverse in a telephonic interview and elect an invention that meets the eligibility requirements for the Green Technology Pilot Program, if the Office determines that the claims are not obviously directed to a single invention. See Instruction Sheet.

3. This request is accompanied by statements of special status for the eligibility requirement.

4. The application contains no more than three (3) independent claims and twenty (20) total claims.

5. The application does not contain any multiple dependent claims.

6. Other attachments: Statement Concerning the Basis for the Special Status

Signature /Allison W. Mages/	Date September 26, 2011
Name (Print/Typed) Allison W. Mages	Registration Number 57,275

Note: Signatures of all the inventors or assignees of record of the entire interest or their representative(s) are required in accordance with 37 CFR 1.33 and 11.18. Please see 37 CFR 1.4(d) for the form of the signature. If necessary, submit multiple forms for more than one signature, see below.*

☐ *Total of _____ forms are submitted.

If you need assistance in completing the form, call 1-800-PTO-9199 and select option 2.

IN THE UNITED STATES PATENT AND TRADEMARK OFFICE

First Named Inventor: Jonathan D. NELSON)
Confirmation No.: 7370)
)
Serial No.: 13/177,894)
)
Filing Date: 07-07-2011)
)
Atty Docket No.: 226773-1 (GECZ201012US01))

VIA EFS
Commissioner for Patents
P.O. Box 1450
Alexandria, VA 22313-1450

Statement Concerning the Basis for the Special Status

SIR:

The present application is directed toward a ducting system for use with a hybrid water heater and more particularly to a ducting arrangement that is joined to the water heater for directing air to and from the water heater to/from different locations to decrease energy consumption. (See [0001])

One advantage of the present application relates to decreasing energy consumption by directing air to and/or from the hybrid water heating system. (See [0008])

Another aspect of the present application is a duct adapter system that operates with a hybrid water heater to decrease energy consumption. A boost fan of the duct adapter system draws warm air from a remote source that is removed from a conditioned space that is surrounding the hybrid water heater and being heated by a furnace or heater. Accordingly, the furnace does not energize to restore a temperature of the conditioned space because ambient

heat is no longer absorbed from the space. The decrease in power usage can result in reduced utility costs based on a decrease in power consumption. [See 0009]

Therefore, Applicant respectfully submits that Special Status is sought on the basis that the present invention materially contributes to the more efficient utilization and conservation of energy resources.

The undersigned representative may be contacted at the number below to facilitate the resolution of any matters. Please charge any fees that are incurred in connection with this Statement to deposit account no. 09-0470.

Respectfully submitted,

General Electric Company

By : /Allison W. Mages/
Allison W. Mages
Reg. No. 57,275

Dated: September 26, 2011

GE Global Patent Operation
2 Corporate Drive, Suite 648
Shelton, CT 06484
203-944-6730

UNITED STATES PATENT AND TRADEMARK OFFICE

UNITED STATES DEPARTMENT OF COMMERCE
United States Patent and Trademark Office
Address: COMMISSIONER FOR PATENTS
P.O. Box 1450
Alexandria, Virginia 22313-1450
www.uspto.gov

APPLICATION NO.	FILING DATE	FIRST NAMED INVENTOR	ATTORNEY DOCKET NO.	CONFIRMATION NO.
13/177,894	07/07/2011	Jonathan D. Nelson	226773-1 GECZ 201012US01	7370

78707 7590 10/05/2011

FAY SHARPE LLP/GE APPLIANCE
1228 Euclid Avenue, 5th Floor
The Halle Building
Cleveland, OH 44115-1843

EXAMINER	
ART UNIT	PAPER NUMBER
3741	

MAIL DATE	DELIVERY MODE
10/05/2011	PAPER

Please find below and/or attached an Office communication concerning this application or proceeding.

The time period for reply, if any, is set in the attached communication.

UNITED STATES PATENT AND TRADEMARK OFFICE

Commissioner for Patents
United States Patent and Trademark Office
P.O. Box 1450
Alexandria, VA 22313-1450
www.uspto.gov

FAY SHARPE LLP/GE APPLIANCE
1228 Euclid Avenue, 5th Floor
The Halle Building
Cleveland OH 44115-1843

In re Application of	:	
NELSON, JONATHAN D.	:	DECISION ON PETITION
Application No. 13/177,894	:	TO MAKE SPECIAL UNDER
Filed: July 7, 2011	:	THE GREEN TECHNOLOGY
Attorney Docket No. 226773-1 GECZ 201012US01	:	PILOT PROGRAM
Title of Invention: HYBRID ELECTRIC WATER HEATER WITH EXTERNAL DISCHARGE DUCTING		

This is a decision on the petition under 37 CFR 1.102, filed Sep. 26, 2011, to make the above-identified application special under the pilot program for applications pertaining to Green Technologies as set forth in 74 Federal Register Notice 64666 (December 8, 2009) and amended by 75 Federal Register Notice 28554 (May 21, 2010).

The petition is **DISMISSED**.

If reconsideration of this decision is desired, a petition for reconsideration must be filed within ONE (1) MONTH OR THIRTY (30) DAYS from the mail date of this decision, whichever is longer. No extension of this time limit can be granted under 37 CFR 1.136(a) or (b). The petition for reconsideration should include an exhaustive attempt to provide the lacking item(s) noted below, since, after a decision on the petition for reconsideration, no further reconsideration or review of the matter will be undertaken by the Director.

A grantable petition to make an application special under 37 CFR 1.102 and the pilot program as set forth in 74 FR 64666 must be directed to a nonprovisional application filed under 35 USC 111(a) or be a national stage entry under 35 USC 371, exclusive of any reissue applications and be filed prior to the date of the notice, December 8, 2009.

In order to qualify for special status, the following requirements must be met. 1) The application must have no more than 3 independent claims and no more than 20 total claims. 2) The application must not contain any multiple dependent claims. 3) The petition must state the basis for seeking special status, i.e., the claimed invention either: A) materially enhances the quality of the environment or B) materially contributes to: i) the discovery or development of renewable energy resources, ii) the more efficient utilization and conservation of energy resources, or iii)

greenhouse gas emission reduction. 4) If the disclosure is not clear on its face that the claimed invention materially contributes under category (A) or (B), the petition must be accompanied by a statement by the applicant, assignee, or an attorney/agent registered to practice before the Office explaining how the materiality standard is met. 5) A statement that applicant will agree to make an election without traverse in a telephonic interview if a restriction requirement is made by the examiner. 6) The petition to make special must be filed electronically. 7) The petition must be filed at least one day prior to the date that a first Office Action appears in the Patent Application Information Retrieval (PAIR) system. 8) The petition must be accompanied by a request for early publication in compliance with 37 CFR 1.219 and include the publication fee as set forth in 37 CFR 1.18(d).

The requirement for a fee for consideration of the petition to make special for applications pertaining to Green Technologies has been waived.

The petition lacks items 1 and 4. Regarding item 1, petitioner should note that a review of the application claims has been made for the purposes of determining the number of claims contained therein. This application contains more than 3 independent claims and/or more than 20 total claims. As set forth in the Notice, if the application contains more than 3 independent claims or more than 20 total claims, it will not be eligible to participate in the "Pilot Program for Green Technologies Including Greenhouse Gas Reduction." Currently, the application contains a total of 26 claims.

In regard to item 4, petitioner should note that the instant petition includes a statement identifying the basis for the special status (i.e., whether the instant invention (1) materially enhances the quality of the environment or materially contributes to (2) development of renewable energy resources or energy conservation, or (3) greenhouse gas reduction) as required by sections II and III of the notice. However, as stated in the notice, applicant must also provide a statement pertaining to the materiality standard if the application disclosure is not clear on its face as to the materiality of the basis for the special status of the invention. This petition lacks such a statement and it is not agreed that the application on its face meets that materiality standard. For example, it is not clear how the claimed duct system with a collar and a boost fan will enhance the quality of the environment or materially contribute to development of renewable energy resources or energy conservation, or reduce greenhouse gas reduction.

Any reconsideration of this decision should be submitted through the USPTO electronic filing system, EFS-Web, and selecting the document description of "Petition for Green Tech Pilot" on the EFS-Web screen. The application is being forwarded to the Technology Center Art Unit 3741 for action in its regular turn. Telephone inquiries concerning this decision should be directed to Henry C. Yuen at 571-272-4856.

/Henry C. Yuen/

Henry C. Yuen
Quality Assurance Specialist
Technology Center 3700

IN THE UNITED STATES PATENT AND TRADEMARK OFFICE

First Named Inventor: Jonathan D. NELSON	)
Confirmation No.: 7370	)
	)
Serial No.: 13/177,894	)
	)
Filing Date: 07-07-2011	)
	)
Atty Docket No.: 226773-1 (GECZ 201012US01)	)

Commissioner for Patents
P.O. Box 1450
Alexandria, VA 22313-1450

Request for Reconsideration

SIR:

This is responsive to the Decision on Petition, dated as mailed 5 October 2011, in the above-referenced application.

Applicant respectfully requests reconsideration of Applicant's Petition to Make Special on the basis that the present invention materially contributes to the more efficient utilization and conservation of energy resources.

The Decision to Make Special Under the Green Technology Pilot Program (hereinafter "the Decision") states that it is not clear how the claimed duct system with a collar and a boost fan will enhance the quality of the environment or materially contribute to development of renewable energy resources or energy conservation, or reduce greenhouse gas reduction. Applicant does not agree with the comments made in the Decision.

Applicant respectfully submits that embodiments of the present invention relate to a ducting system for use with a hybrid water heater and more particularly to a ducting arrangement that is joined to the water heater for

directing air to and from the water heater to/from different locations to decrease energy consumption of the water heater, and/or of the water heater and building system, as well as provide means to minimize impact on the temperature of the conditioned space adjacent to the water heater if this is desired. (see at least paragraph [0001]).

In a hybrid water heater system, a heat pump water heater is provided that typically operates in a closed area that is contained in a conditioned space. To keep the conditioned space warm, a furnace operates when the temperature of the conditioned space drops below a select setting or set point. If the heat energy from the warm ambient air contained in the conditioned space is transferred by the heat pump water heater to the water stored in the tank, the furnace can run more frequently and/or for longer durations to compensate for the temperature loss. Furthermore, the heat pump can undesirably direct cool air into the conditioned space in the winter. Thus, although cool air may be desired in the summer, it is undesirable to direct the cool air from the heat pump in the winter months into the conditioned space. (see at least paragraph [0003]).

Furthermore, the hybrid water heater can consume more energy if it is put into an operating mode that functions to heat the water contained in the tank body using a resistive heater like a standard electric water heater. This creates an inefficient heating arrangement. Additionally, the extra power required to run the furnace can cause the occupant to incur greater utility expenses. Accordingly, an alternative arrangement for receiving air to and/or directing air

from the hybrid water heater is desired, and also an arrangement that is responsive to seasonal conditions. (see at least paragraph [0004]).

The present disclosure is directed toward a duct system for operating in conjunction with a hybrid water heater. The hybrid water heater can include a hybrid electric water heater ("HEWH") incorporating a resistive heater element and a heat pump. A resistive heater element heats the water temperature to a select set point in a first mode. In a second mode, the heat pump selectively energizes to heat and/or maintain the temperature of the volume of water. (see at least paragraph [0014]). Embodiments of the present invention provide an alternative heated (ambient) air supply to the hybrid water heater so that the evaporator of the heat pump does not absorb heat from the conditioned area surrounding the heat pump. (see at least paragraph [0017]). As such, one advantage of the present disclosure relates to decreasing energy consumption by directing air to and/or from the hybrid water heating system. (see at least paragraph [0008]).

The embodiments disclosed herein provide an alternative heated air supply to a hybrid water heater. Embodiments avoid absorption of heat from the conditioned area surrounding the heat pump, which eliminates unncecceary operation of a consumer's furnace to further heat the conditioned area, and results in decreased overall energy consumption by the consumer. As such, the present invention promotes the more efficient utilization of and conservation of energy.

The undersigned attorney may be contacted at the number below to facilitate the resolution of any matters. Please charge any fees that are incurred in connection with this Statement to deposit account no. 09-0470.

Respectfully submitted,

General Electric Company

By : /Allison W Mages/
Allison Weiner Mages
Reg. No. 57,275

Dated: November 7, 2011

GE Global Patent Operation
2 Corporate Drive, Suite 648
Shelton, CT 06484
203-944-6730

UNITED STATES PATENT AND TRADEMARK OFFICE

UNITED STATES DEPARTMENT OF COMMERCE
United States Patent and Trademark Office
Address: COMMISSIONER FOR PATENTS
P.O. Box 1450
Alexandria, Virginia 22313-1450
www.uspto.gov

APPLICATION NO.	FILING DATE	FIRST NAMED INVENTOR	ATTORNEY DOCKET NO.	CONFIRMATION NO.
13/177,894	07/07/2011	Jonathan D. Nelson	226773-1 GECZ 201012US01	7370

78707 7590 11/18/2011

FAY SHARPE LLP/GE APPLIANCE
1228 Euclid Avenue, 5th Floor
The Halle Building
Cleveland, OH 44115-1843

EXAMINER	
ART UNIT	PAPER NUMBER
3744	

MAIL DATE	DELIVERY MODE
11/18/2011	PAPER

Please find below and/or attached an Office communication concerning this application or proceeding.

The time period for reply, if any, is set in the attached communication.

UNITED STATES PATENT AND TRADEMARK OFFICE

Commissioner for Patents
United States Patent and Trademark Office
P.O. Box 1450
Alexandria, VA 22313-1450
www.uspto.gov

11/18/11

FAY SHARPE LLP/GE APPLIANCE
1228 Euclid Avenue, 5th Floor
The Halle Building
Cleveland OH 44115-1843

In re Application of :
Nelson et al. :
Application No. 13/177,894 :
Filed: 7/7/2011 :
Attorney Docket No. **226773-1 GECZ 201012US01** :

DECISION ON PETITION TO MAKE SPECIAL UNDER THE GREEN TECHNOLOGY PILOT PROGRAM

This is a decision on the request for reconsideration filed 11/7/2011, to make the above-identified application special under the pilot program for applications pertaining to Green Technologies as set forth in 74 Federal Register Notice 64666 (December 8, 2009) and amended by 75 Federal Register Notice 28554 (May 21, 2010) and 75 Federal Register Notice 69049 (November 10, 2010).

The petition is **GRANTED**.

A grantable petition to make an application special under 37 CFR 1.102 and the pilot program as set forth in 74 FR 64666 must be directed to a nonprovisional application filed under 35 USC 111(a) or be a national stage entry under 35 USC 371, exclusive of any reissue applications.

In order to qualify for special status, the following requirements must be met. 1) The application must have no more than 3 independent claims and no more than 20 total claims. 2) The application must not contain any multiple dependent claims. 3) The petition must state the basis for seeking special status, i.e., the claimed invention either: A) materially enhances the quality of the environment or B) materially contributes to: i) the discovery or development of renewable energy resources, ii) the more efficient utilization and conservation of energy resources, or iii) greenhouse gas emission reduction. 4) If the disclosure is not clear on its face that the claimed invention materially contributes under category (A) or (B), the petition must be accompanied by a statement by the applicant, assignee, or an attorney/agent registered to practice before the Office explaining how the materiality standard is met. 5) A statement that applicant will agree to make an election without traverse in a telephonic interview if a restriction requirement is made by the examiner. 6) The petition to make special must be filed electronically. 7) The petition must be filed at least one day prior to the date that a first Office Action appears in the Patent

Application Information Retrieval (PAIR) system. 8) The petition must be accompanied by a request for early publication in compliance with 37 CFR 1.219 and include the publication fee as set forth in 37 CFR 1.18(d).

The requirement for a fee for consideration of the petition to make special for applications pertaining to Green Technologies has been waived.

The instant petition complies with items 1 – 8 above. Accordingly, the above-identified application has been accorded "special" status.

Telephone inquires concerning this decision should be directed to Tom Dunn at 571-272-1171.

The application is being forwarded to the Technology Center Art Unit 3744 for action on the merits commensurate with this decision.

/Tom Dunn/

Tom Dunn
Quality Assurance Specialist
Technology Center 1700

UNITED STATES PATENT AND TRADEMARK OFFICE

UNITED STATES DEPARTMENT OF COMMERCE
United States Patent and Trademark Office
Address: COMMISSIONER FOR PATENTS
P.O. Box 1450
Alexandria, Virginia 22313-1450
www.uspto.gov

APPLICATION NO.	FILING DATE	FIRST NAMED INVENTOR	ATTORNEY DOCKET NO.	CONFIRMATION NO.
13/177,999	07/07/2011	Aaron Wheeler	11-429	7567

98929 7590 08/17/2011

McDonnell Boehnen Hulbert & Berghoff
LLP/Google Inc.
300 South Wacker Drive, Suite 3100
Chicago, IL 60606

EXAMINER	
HOANG, SON T	

ART UNIT	PAPER NUMBER
2165	

MAIL DATE	DELIVERY MODE
08/17/2011	PAPER

Please find below and/or attached an Office communication concerning this application or proceeding.

The time period for reply, if any, is set in the attached communication.

UNITED STATES PATENT AND TRADEMARK OFFICE

Commissioner for Patents
United States Patent and Trademark Office
P.O. Box 1450
Alexandria, VA 22313-1450
www.uspto.gov

McDonnell Boehnen Hulbert & Berghoff
LLP/Google Inc.
300 South Wacker Drive, Suite 3100
Chicago IL 60606

In re Application of
WHEELER, Aaron et al.
Appl. No.: 13/177,999
Filed: July 7, 2011
For: **METHOD AND APPARATUS FOR PANEL-BASED MANAGEMENT OF DATA**

DECISION ON PETITION TO MAKE SPECIAL FOR NEW APPLICATION UNDER 37 C.F.R. § 1.102 & M.P.E.P. § 708.02

This is a decision on the petition filed on July 7, 2011 to make the above-identified application special for accelerated examination procedure under 37 C.F.R. § 1.102(d).

The petition to make the application special is **GRANTED**.

The application is eligible for accelerated examination and the petition complies with the conditions for granting the application special status pursuant to the "Change to Practice for Petitions in Patent Applications to Make Special and for Accelerated Examination" issued June 26, 2006, in the Federal Register. (71 Fed. Reg. 36323).

The prosecution of the instant application will be conducted expeditiously according to the following guidelines.

1. The application will be docketed to an examiner and taken up for action within two weeks of the date of this decision.

2. Restriction Practice:
   If the examiner determines that the claims are not directed to a single invention, a telephone request to elect one single invention will be made pursuant to MPEP 812.01. As a prerequisite to the grant of this petition, the applicant has agreed to make an oral

election, by telephone, without traverse. If the applicant refuses to make an election without traverse, or the examiner cannot reach the applicant after a reasonable effort, the examiner will treat the first claimed invention (invention defined by claim 1) as having being constructively elected without traverse for examination.

3. Office action:
If it is determined that, after appropriate consultation, there is a potential rejection or any other issue to be addressed, the examiner will telephone the applicant and arrange an interview to discuss and resolve the issue. An Office action, other than a Notice of Allowance and Fee(s) Due (Notice of Allowance), will not be issued unless either: 1) an interview was conducted but did not result in agreed to action that places the application in condition for allowance, or, 2) a determination is made that an interview would be unlikely to result in the application being placed in condition for allowance, and 3) an internal conference has been held to review any rejection of any claim.

4. Time for Reply:
An Office action other than a Notice of Allowance or a final Office action will set a shortened statutory period of one month or thirty days, whichever is longer, for reply with no extension of time available under 37 CFR 1.136(a). Failure to timely file a reply within this non-extendible period for reply will result in the abandonment of the application.

5. Reply by Applicant:
A timely reply to an Office action other than the Notice of Allowance must be submitted electronically via EFS or EFS-web and limited to addressing the rejections, objections and requirement made. Any amendment that attempts to: 1) add claims which would result in more than three pending independent claims or more than twenty pending total claims; 2) present claims not encompassed by the pre-examination search or an updated accelerated examination support document; or 3) present claims that are directed a non-elected invention or an invention other than that previously claimed and examined in the application, will be treated as not fully responsive and will not be entered.

For any amendment to the claims (including any new claim) that is not encompassed by the accelerated examination support document, applicant must provide an updated accelerated examination support document that encompasses the amended or new claims at the time of filing of the amendment.

To proceed expeditiously with the examination, it is recommended that a reply with amendments made to any claim or with any new claim being added be accompanied by an updated accelerated examination support document or a statement explaining how the amended or new claim is supported by the original accelerated examination support document.

6. Information Disclosure Statement (IDS):

Any IDS filed during prosecution must be submitted electronically via EFS or EFS-web, accompanied by an updated accelerated examination support document, and be in compliance with 37 CFR 1.97 and 1.98.

7. Post-Allowance Processing:
To expedite processing of the allowed application into a patent, the applicant must: 1) pay the required fees within one month of the date of the Notice of Allowance, and 2) not file any post allowance papers not required by the Office. In no event may the issue fee be paid and accepted later than three months from the date of the Notice of Allowance.

8. After-Final and Appeal Procedures:
To expedite prosecution, after receiving the final Office action, applicant must: 1) promptly file a notice of appeal, an appeal brief and appeal fees; and 2) not request a pre-appeal brief conference.

Any amendment, affidavit or other evidence filed after final Office action must comply with applicable rules and the requirements outlined in numbered paragraphs 5 and 6 above.

On appeal, the application will proceed according to normal appeal procedures. After appeal, the application will again be treated special.

9. Proceedings Outside the Normal Examination Process:
If the application becomes involved in a proceeding that is outside the normal examination process (e.g., a secrecy order, national security review, interference proceeding, petitions under 37 CFR 1.181, 182 or 183), the application will be treated special before and after such proceeding.

10. Final Disposition:
The twelve month goal of this accelerated examination procedure ends with a final disposition. The mailing of a final Office action, a Notice of Allowance, the filing of a Notice of Appeal, or the filing of a Request for Continued Examination (RCE) is the final disposition.

If, during prosecution, a paper is not filed electronically using EFS-web, a reply is filed but is not fully responsive, the application is involved in an appeal, or a proceeding outside normal examination process, the application will still be examined expeditiously, however, the final disposition may occur more than twelve months from the filing of the application.

Any inquiry regarding this decision should be directed to Eddie C. Lee at (571) 272-1732.

/Eddie C. Lee/

Eddie C. Lee
Quality Assurance Specialist
Technology Center 2100

UNITED STATES PATENT AND TRADEMARK OFFICE

Commissioner for Patents
United States Patent and Trademark Office
P.O. Box 1450
Alexandria, VA 22313-1450
www.uspto.gov

LOGINOV & ASSOCIATES, PLLC
10 WATER STREET
CONCORD NH 03301

MAILED
JUL 25 2011
OFFICE OF PETITIONS

In re Application of :
Michael Szycher :
Application No. 13/178,002 : ON PETITION
Filed: July 7, 2011
Attorney Docket No. 107/0001D1 :
:

This is a decision on the petition under 37 CFR 1.102(c)(1), filed July 7, 2011, to make the above-identified application special based on applicant's age as set forth in M.P.E.P. § 708.02, Section IV.

The petition is **GRANTED**.

A grantable petition to make an application special under 37 CFR 1.102(c)(1) and MPEP § 708.02, Section IV: Applicant's Age must be accompanied by evidence showing that at least one of the applicants is 65 years of age, or more, such as a birth certificate or a statement by applicant. No fee is required

The instant petition includes a statement (PTO/SB/130 form) by applicant's attorney that applicant is 65 years of age. Accordingly, the above-identified application has been accorded "special" status.

Telephone inquiries concerning this decision should be directed to the undersigned at 571-272-7751. All other inquiries concerning either the examination or status of the application should be directed to the Technology Center.

This matter is being referred to the Office of Patent Application Processing for further processing in accordance with this decision on petition.

/Joan Olszewski/
Joan Olszewski
Petitions Examiner
Office of Petitions

UNITED STATES PATENT AND TRADEMARK OFFICE

UNITED STATES DEPARTMENT OF COMMERCE
United States Patent and Trademark Office
Address: COMMISSIONER FOR PATENTS
P.O. Box 1450
Alexandria, Virginia 22313-1450
www.uspto.gov

APPLICATION NO.	FILING DATE	FIRST NAMED INVENTOR	ATTORNEY DOCKET NO.	CONFIRMATION NO.
13/178,055	07/07/2011	Keiichi Imamura	08320D/LH	7675

1933 7590 09/13/2011

HOLTZ, HOLTZ, GOODMAN & CHICK PC
220 Fifth Avenue
16TH Floor
NEW YORK, NY 10001-7708

EXAMINER	
ART UNIT	PAPER NUMBER
2624	

MAIL DATE	DELIVERY MODE
09/13/2011	PAPER

Please find below and/or attached an Office communication concerning this application or proceeding.

The time period for reply, if any, is set in the attached communication.

UNITED STATES PATENT AND TRADEMARK OFFICE

Commissioner for Patents
United States Patent and Trademark Office
P.O. Box 1450
Alexandria, VA 22313-1450
www.uspto.gov

HOLTZ, HOLTZ, GOODMAN & CHICK PC
220 Fifth Avenue
16TH Floor
NEW YORK NY 10001-7708

In re Application of
Keiichi IMAMURA
Application No.: 13/178,055
Filed: 07 July 2011
Attorney Docket No.: 08320D/LH
For: IMAGE PICKUP DEVICE, FACE DETECTION METHOD, AND COMPUTER-READABLE RECORDING MEDIUM

: DECISION ON REQUEST TO
: PARTICIPATE IN THE PATENT
: PROSECUTION HIGHWAY
: PROGRAM AND PETITION
: TO MAKE SPECIAL UNDER
: 37 CFR 1.102(a)

This is a decision on the request to participate in the Patent Prosecution Highway (PPH) program and the petition under 37 CFR 1.102(a), filed 30 August 2011, to make the above-identified application special.

The request and petition are **GRANTED**.

Discussion

A grantable request to participate in the PPH pilot program and petition to make special require:

1. The U.S. application is

    a. a Paris Convention application which either
        i. validly claims priority under 35 U.S.C. 119(a) and 37 CFR 1.55 to one or more applications filed in the JPO, or
        ii. validly claims priority to a PCT application that contains no priority claims, or
    b. a national stage application under the PCT (an application which entered the national stage in the U.S. from a PCT international application after compliance with 35 U.S.C. 371), which PCT application
        i. validly claims priority to an application filed in the JPO, or
        ii. validly claims priority to a PCT application that contains no priority claims, or
        iii. contains no priority claim, or
    c. a so-called bypass application filed under 35 U.S.C. 111(a) which validly claims benefit under 35 U.S.C. 120 to a PCT application, which PCT application

i. validly claims priority to an application filed in the JPO, or
ii. validly claims priority to a PCT application that contains no priority claims, or
iii. contains no priority claim;

2. Applicant must submit a copy of:
   a. The allowable/patentable claim(s) from the JPO application(s);
   b. An English translation of the allowable/patentable claim(s) and
   c. A statement that the English translation is accurate;
3. Applicant must:
   a. Ensure all the claims in the U.S. application must sufficiently correspond or be amended to sufficiently correspond to the allowable/patentable claim(s) in the JPO application(s) and
   b. Submit a claims correspondence table in English;
4. Examination of the U.S. application has not begun;
5. Applicant must submit:
   a. Documentation of prior office action:
      i. a copy of the office action(s) just prior to the "Decision to Grant a Patent" from each of the JPO application(s) containing the allowable/patentable claim(s) or
      ii. if the allowable/patentable claims(s) are from a "Notification of Reasons for Refusal" then the Notification of Reasons for Refusal or
      iii. if the JPO application is a first action allowance then no office action from the JPO is necessary should be indicated on the request/petition form;
   b. An English language translation of the JPO Office action from (5)(a)(i)-(ii) above
   c. A statement that the English translation is accurate;
6. Applicant must submit:
   a. An IDS listing the documents cited by the JPO examiner in the JPO office action (unless already submitted in this application)
   b. Copies of the documents except U.S. patents or U.S. patent application publications (unless already submitted in this application);

The request to participate in the PPH pilot program and petition comply with the above requirements. Accordingly, the above-identified application has been accorded "special" status.

Inquiries concerning this decision should be directed to Lee W. Young at 571-272-4549.

All other inquiries concerning the examination or status of the application is accessible in the PAIR system at http://www.uspto.gov/ebc.index.html.

This application will be forwarded to the examiner for action on the merits commensurate with this decision once this application's formality reviews have been completed.

Lee W. Young
TQAS, Technology Center 2600

Doc Code: PPH.PET.652
Document Description: Petition to make special under PCT-Patent Pros Hwy

PTO/SB/20PCT-EP (05-10)
Approved for use through 01/31/2012. OMB 0651-0058
U.S. Patent and Trademark Office; U.S. DEPARTMENT OF COMMERCE
Under the Paperwork Reduction Act of 1995, no persons are required to respond to a collection of information unless it contains a valid OMB control number.

REQUEST FOR PARTICIPATION IN THE PATENT COOPERATION TREATY – PATENT PROSECUTION HIGHWAY (PCT-PPH) PILOT PROGRAM BETWEEN THE EUROPEAN PATENT OFFICE (EPO) AND THE USPTO

Application No.:	Not Yet Assigned	Filing Date:	Concurrently Herewith
First Named Inventor:	Neil L. Sbar		
Title of the Invention:	LAMINATION OF ELECTROCHROMIC DEVICE TO GLASS SUBSTRATES		

THIS REQUEST FOR PARTICIPATION IN THE PCT-PPH PILOT PROGRAM ALONG WITH THE REQUIRED DOCUMENTS MUST BE SUBMITTED VIA EFS-WEB. INFORMATION REGARDING EFS-WEB IS AVAILABLE AT HTTP://WWW.USPTO.GOV/EBC/EFS_HELP.HTML.

APPLICANT HEREBY REQUESTS PARTICIPATION IN THE PCT-PPH PROGRAM AND PETITIONS TO MAKE THE ABOVE-IDENTIFIED APPLICATION SPECIAL UNDER THE PCT-PPH PROGRAM.

The above-identified application is (1) a national stage entry of the corresponding PCT application, or (2) a national stage entry of another PCT application which claims priority to the corresponding PCT application, or (3) a national application that claims domestic/ foreign priority to the corresponding PCT application, or (4) a national application which forms the basis for the priority claim in the corresponding PCT application, or (5) a continuing application of a U.S. application that satisfies one of (1) to (4) above, or (6) a U.S. application that claims domestic benefit to a U.S. provisional application which forms the basis for the priority claim in the corresponding PCT application.

The corresponding PCT application number(s) is/are: PCT/US2011/027148

The international date of the corresponding PCT application(s) is/are: March 4, 2011

I. **List of Required Documents:**

a. **A copy of the latest international work product (WO/ISA, WO/IPEA, or IPER) in the above-identified corresponding PCT application(s)**

[X] Is attached.

[ ] Is not attached because the document is already in the U.S. application.

b. **A copy of all claims which were indicated as having novelty, inventive step and industrial applicability in the above-identified corresponding PCT application(s).**

[X] Is attached.

[ ] Is not attached because the document is already in the U.S. application.

c. **English translations of the documents in a. and b. above are attached (if the documents are not in the English language). A statement that the English translation is accurate is attached for the document in b. above.**

d. **(1) An information disclosure statement listing the documents cited in the international work products (ISR, WO/ISA, WO/IPEA, IPER) of the corresponding PCT application.**

[X] Is attached.

[ ] Has already been filed in the above-identified U.S. application on _____

(2) Copies of all documents (except) for U.S. patents or U.S. patent application publications)

[X] Are attached.

[ ] Have already been filed in the above-identified U.S. application on _____

PTO/SB/20PCT-EP (05-10)
Approved for use through 01/31/2012. OMB 0651-0058
U.S. Patent and Trademark Office; U.S. DEPARTMENT OF COMMERCE
Under the Paperwork Reduction Act of 1995, no persons are required to respond to a collection of information unless it contains a valid OMB control number.

REQUEST FOR PARTICIPATION IN THE PCT-PPH PILOT PROGRAM BETWEEN THE EPO AND THE USPTO
(continued)

Application No.:	Not Yet Assigned
First Named Inventor:	Neil L. Sbar

II. Claims Correspondence Table:

Claims in US Application	Patentable Claims in the corresponding PCT Application	Explanation regarding the correspondence
Claim 1	Claim 3	Claim 1 is dependent claim 3 rewritten in independent form
Claim 2	Claim 5	Identical
Claim 3	Claim 6	Identical
Claim 4	Claim 7	Identical
Claim 5	Claim 8	Identical
Claim 6	Claim 10	Identical
Claim 7	Claim 11	Identical
Claim 8	Claim 14	Identical
Claim 9	Claim 15	Identical
Claim 10	Claim 16	Identical
Claim 11	Claim 18	Identical
Claim 12	Claim 19	Identical
Claim 13	Claim 20	Identical
Claim 14	Claim 23	Identical
Claim 15	Claim 24	Identical
Claim 16	Claim 4	Claim 16 is dependent claim 4 rewritten in independent form
Claim 17	Claim 5	Identical
Claim 18	Claim 6	Identical
Claim 19	Claim 7	Identical
Claim 20	Claim 8	Identical
Claim 21	Claim 10	Identical
Claim 22	Claim 11	Identical
Claim 23	Claim 14	Identical
Claim 24	Claim 15	Identical
Claim 25	Claim 23	Identical
Claim 26	Claim 24	Identical
Claim 27	Claim 27	Claim 27 is dependent claim 27 rewritten in independent form
Claim 28	Claim 29	Identical
Claim 29	Claim 30	Identical
Claim 30	Claim 31	Identical
Claim 31	Claim 32	Identical
Claim 32	Claim 33	Identical
Claim 33	Claim 34	Identical
Claim 34	Claim 35	Identical
Claim 35	Claim 36	Identical
Claim 36	Claim 38	Identical
Claim 37	Claim 39	Identical
Claim 38	Claim 40	Identical
Claim 39	Claim 42	Identical
Claim 40	Claim 43	Identical
Claim 41	Claim 44	Identical
Claim 42	Claim 45	Identical
Claim 43	Claim 46	Identical
Claim 44	Claim 47	Identical
Claim 45	Claim 48	Identical
Claim 46	Claim 28	Claim 46 is dependent claim 28 rewritten in independent form

Claim 47	Claim 29	Identical
Claim 48	Claim 30	Identical
Claim 49	Claim 31	Identical
Claim 50	Claim 32	Identical
Claim 51	Claim 34	Identical
Claim 52	Claim 35	Identical
Claim 53	Claim 38	Identical
Claim 54	Claim 39	Identical
Claim 55	Claim 47	Identical
Claim 56	Claim 48	Identical
Claim 57	Claim 50	Claim 57 is dependent claim 50 rewritten in independent form
Claim 58	Claim 51	Identical
Claim 59	Claim 52	Identical
Claim 60	Claim 54	Identical
Claim 61	Claim 55	Identical
Claim 62	Claim 56	Identical
Claim 63	Claim 57	Identical
Claim 64	Claim 58	Identical
Claim 65	Claim 59	Identical
Claim 66	Claim 61	Identical
Claim 67	Claim 62	Identical
Claim 68	Claim 63	Identical
Claim 69	Claim 64	Identical
Claim 70	Claim 66	Identical
Claim 71	Claim 67	Identical
Claim 72	Claim 68	Identical
Claim 73	Claim 69	Identical
Claim 74	Claim 70	Identical
Claim 75	Claim 71	Identical
Claim 76	Claim 72	Identical
Claim 77	Claim 73	Identical
Claim 78	Claim 76	Identical
Claim 79	Claim 77	Identical

III. All the claims in the US application sufficiently correspond to the patentable claims in the corresponding PCT application.

Signature	/Thomas M. Finetti/	Date	July 7 2011
Name (Print/Typed)	Thomas M. Finetti	Registration Number	61,881

I hereby certify that this paper (along with any paper referred to as being attached or enclosed) is being transmitted via the Office electronic filing system in accordance with § 1.6(a)(4).

Dated: July 7 2011 Electronic Signature for Thomas M. Finetti: /Thomas M. Finetti/

UNITED STATES PATENT AND TRADEMARK OFFICE

UNITED STATES DEPARTMENT OF COMMERCE
United States Patent and Trademark Office
Address: COMMISSIONER FOR PATENTS
P.O. Box 1450
Alexandria, Virginia 22313-1450
www.uspto.gov

APPLICATION NO.	FILING DATE	FIRST NAMED INVENTOR	ATTORNEY DOCKET NO.	CONFIRMATION NO.
13/178,065	07/07/2011	Neil L. Sbar	SAGE 3.0-031 CONT	7691

530 7590 07/27/2011

LERNER, DAVID, LITTENBERG,
KRUMHOLZ & MENTLIK
600 SOUTH AVENUE WEST
WESTFIELD, NJ 07090

EXAMINER	
ART UNIT	PAPER NUMBER
2873	

MAIL DATE	DELIVERY MODE
07/27/2011	PAPER

Please find below and/or attached an Office communication concerning this application or proceeding.

The time period for reply, if any, is set in the attached communication.

UNITED STATES PATENT AND TRADEMARK OFFICE

Commissioner for Patents
United States Patent and Trademark Office
P.O. Box 1450
Alexandria, VA 22313-1450
www.uspto.gov

LERNER, DAVID, LITTENBERG, KRUMHOLZ & MENTLIK
600 SOUTH AVENUE WEST
WESTFIELD NJ 07090

In re Application of
SBAR et al.
Application No.: 13/178065
Filed: 07 July 2011
Attorney Docket No.: SAGE 3.0-031 CONT
For: LAMINATION OF ELECTROCHROMIC DEVICE TO GLASS SUBSTRATES

: DECISION ON REQUEST TO
: PARTICIPATE IN THE PATENT
: PROSECUTION HIGHWAY
: PROGRAM AND PETITION
: TO MAKE SPECIAL UNDER
: 37 CFR 1.102(a)

This is a decision on the request to participate in the PCT Patent Prosecution Highway (PCT-PPH) pilot program and the petition under 37 CFR 1.102(a), filed on 07 July 2011, to make the above-identified application special.

The request and petition are **GRANTED**.

Discussion

A grantable request to participate in the PCT-PPH pilot program and petition to make special require:

(1) The U.S. application must have an eligible relationship to one or more PCT applications where the ISA or IPEA are the JPO, EPO, KIPO, NPI, or USPTO;

(2) At least one claim in the PCT application has novelty, inventive step, and industrial applicability and must be free of any observations in Box VIII in the latest work product in the international stage or applicant must identify and explain why the claim(s) is/are not subject to the observation in Box VIII;

(3) Applicant must submit a copy of the claim(s) from the PCT application(s) that have novelty, inventive step, and industrial applicability along with an English translation thereof and a statement that the English translation is accurate, if the claims are not in the English language;

(4) All the claims in the U.S. application must sufficiently correspond or be amended to sufficiently correspond to the claim(s) that have novelty, inventive step, and industrial applicability in the PCT application(s);

(5) Examination of the U.S. application has not begun;

(6) Applicant must submit a copy of the latest international work product from the PCT application indicating that the claim(s) have novelty, inventive step, and industrial applicability along with an English translation thereof and a statement that the English translation is accurate if the latest international work product is not in the English language;

(7) Applicant must submit an IDS listing the documents cited by the PCT examiner in the international work product along with copies of documents except U.S. patents or U.S. patent application publications.

The request to participate in the PCT-PPH pilot program and petition comply with the above requirements. Accordingly, the above-identified application has been accorded "special" status.

Telephone inquiries concerning this decision should be directed to Lee W. Young at 571-272-4549.

All other inquiries concerning the examination or status of the application is accessible in the PAIR system at http://www.uspto.gov/ebc.index.html.

This application will be forwarded to the examiner for action on the merits commensurate with this decision once this application's formality reviews have been completed.

Lee W. Young
TQAS Technology Center 2800 - Semiconductors,
Electrical & Optical Systems & Components

Doc Code: PET.GREEN
Document Description: Petition for Green Tech Pilot

PTO/SB/420 (03-11)

PETITION TO MAKE SPECIAL UNDER THE GREEN TECHNOLOGY PILOT PROGRAM

Attorney Docket Number: PAT 6301-2	Application Number (if known): 13/178,074	Filing date: July 7, 2011

First Named Inventor: Denis Paul MASSON et al.

Title: SOLAR CELL WITH SPLIT GRIDLINE PATTERN

APPLICANT HEREBY REQUESTS TO PARTICIPATE IN THE GREEN TECHNOLOGY PILOT PROGRAM FOR THE ABOVE-IDENTIFIED APPLICATION. See Instruction Sheet on page 2.

This petition must be timely filed electronically using the USPTO electronic filing system, EFS-Web.

1. By filing this petition:

   Applicant is requesting early publication: Applicant hereby requests early publication under 37 CFR 1.219 and the publication fee set forth in 37 CFR 1.18(d) accompanies this request.

2. By filing this petition: applicant is agreeing to make an election without traverse in a telephonic interview and elect an invention that meets the eligibility requirements for the Green Technology Pilot Program, if the Office determines that the claims are not obviously directed to a single invention. See Instruction Sheet.

3. This request is accompanied by statements of special status for the eligibility requirement.

4. The application contains no more than three (3) independent claims and twenty (20) total claims.

5. The application does not contain any multiple dependent claims.

6. Other attachments: _____

Signature /Louis B. Allard/	Date July 14, 2011
Name (Print/Typed) Louis B. Allard	Registration Number 64014

Note: *Signatures of all the inventors or assignees of record of the entire interest or their representative(s) are required in accordance with 37 CFR 1.33 and 11.18. Please see 37 CFR 1.4(d) for the form of the signature. If necessary, submit multiple forms for more than one signature, see below*.*

■ *Total of 1 forms are submitted.

If you need assistance in completing the form, call 1-800-PTO-9199 and select option 2.

Instruction Sheet for
Petition to Make Special Under the Green Technology Pilot Program

(Not to be Submitted to the USPTO)

The following is a summary of the requirements (for more information see the notices (i) "Pilot Program for Green Technologies Including Greenhouse Gas Reduction," (ii) "Elimination of Classification Requirement in the Green Technology Pilot Program," and (iii) "Expansion and Extension of the Green Technology Pilot Program," available on the USPTO web site at http://www.uspto.gov/patents/init_events/green_tech.jsp):

(1) The application must be a non-reissue, non-provisional utility application filed under 35 U.S.C. 111(a), or an international application that has entered the national stage in compliance with 35 U.S.C. 371, irrespective of the filing date of the application. Reexamination proceedings are excluded from this pilot program.

(2) The application must contain three or fewer independent claims and twenty or fewer total claims. The application must not contain any multiple dependent claims. For an application that contains more than three independent claims or twenty total claims, or multiple dependent claims, applicant must file a preliminary amendment in compliance with 37 CFR 1.121 to cancel the excess claims and/or the multiple dependent claims at the time the petition to make special is filed.

(3) The claims must be directed to a single invention that materially enhances the quality of the environment, or that materially contributes to: (1) the discovery or development of renewable energy resources; (2) the more efficient utilization and conservation of energy resources; or (3) green house gas emission reduction (see the eligibility requirements of sections II and III of the notice (i) cited above). The petition must include a statement that, if the USPTO determines that the claims are directed to multiple inventions (e.g., in a restriction requirement), applicant will agree to make an election without traverse in a telephonic interview, and elect an invention that meets the eligibility requirements in section II or III of the notice (i) cited above.

(4) The petition to make special must be timely filed electronically using the USPTO electronic filing system, EFS-Web, and selecting the document description of "Petition for Green Tech Pilot" on the EFS-Web screen. Applicant should use form PTO/SB/420, which is available as a Portable Document Format (PDF) fillable form in EFS-Web and on the USPTO Web site.

(5) The petition to make special must be filed at least one day prior to the date that a first Office action (which may be an Office action containing only a restriction requirement) appears in the Patent Application Information Retrieval (PAIR) system. Applicant may check the status of the application using PAIR.

(6) The petition to make special must be accompanied by a request for early publication in compliance with 37 CFR 1.219 and the publication fee set forth in 37 CFR 1.18(d).

Privacy Act Statement

The **Privacy Act of 1974 (P.L. 93-579)** requires that you be given certain information in connection with your submission of the attached form related to a patent application or patent. Accordingly, pursuant to the requirements of the Act, please be advised that: (1) the general authority for the collection of this information is 35 U.S.C. 2(b)(2); (2) furnishing of the information solicited is voluntary; and (3) the principal purpose for which the information is used by the U.S. Patent and Trademark Office is to process and/or examine your submission related to a patent application or patent. If you do not furnish the requested information, the U.S. Patent and Trademark Office may not be able to process and/or examine your submission, which may result in termination of proceedings or abandonment of the application or expiration of the patent.

The information provided by you in this form will be subject to the following routine uses:

1. The information on this form will be treated confidentially to the extent allowed under the Freedom of Information Act (5 U.S.C. 552) and the Privacy Act (5 U.S.C 552a). Records from this system of records may be disclosed to the Department of Justice to determine whether disclosure of these records is required by the Freedom of Information Act.
2. A record from this system of records may be disclosed, as a routine use, in the course of presenting evidence to a court, magistrate, or administrative tribunal, including disclosures to opposing counsel in the course of settlement negotiations.
3. A record in this system of records may be disclosed, as a routine use, to a Member of Congress submitting a request involving an individual, to whom the record pertains, when the individual has requested assistance from the Member with respect to the subject matter of the record.
4. A record in this system of records may be disclosed, as a routine use, to a contractor of the Agency having need for the information in order to perform a contract. Recipients of information shall be required to comply with the requirements of the Privacy Act of 1974, as amended, pursuant to 5 U.S.C. 552a(m).
5. A record related to an International Application filed under the Patent Cooperation Treaty in this system of records may be disclosed, as a routine use, to the International Bureau of the World Intellectual Property Organization, pursuant to the Patent Cooperation Treaty.
6. A record in this system of records may be disclosed, as a routine use, to another federal agency for purposes of National Security review (35 U.S.C. 181) and for review pursuant to the Atomic Energy Act (42 U.S.C. 218(c)).
7. A record from this system of records may be disclosed, as a routine use, to the Administrator, General Services, or his/her designee, during an inspection of records conducted by GSA as part of that agency's responsibility to recommend improvements in records management practices and programs, under authority of 44 U.S.C. 2904 and 2906. Such disclosure shall be made in accordance with the GSA regulations governing inspection of records for this purpose, and any other relevant (*i.e.*, GSA or Commerce) directive. Such disclosure shall not be used to make determinations about individuals.
8. A record from this system of records may be disclosed, as a routine use, to the public after either publication of the application pursuant to 35 U.S.C. 122(b) or issuance of a patent pursuant to 35 U.S.C. 151. Further, a record may be disclosed, subject to the limitations of 37 CFR 1.14, as a routine use, to the public if the record was filed in an application which became abandoned or in which the proceedings were terminated and which application is referenced by either a published application, an application open to public inspection or an issued patent.
9. A record from this system of records may be disclosed, as a routine use, to a Federal, State, or local law enforcement agency, if the USPTO becomes aware of a violation or potential violation of law or regulation.

UNITED STATES PATENT AND TRADEMARK OFFICE

UNITED STATES DEPARTMENT OF COMMERCE
United States Patent and Trademark Office
Address: COMMISSIONER FOR PATENTS
P.O. Box 1450
Alexandria, Virginia 22313-1450
www.uspto.gov

APPLICATION NO.	FILING DATE	FIRST NAMED INVENTOR	ATTORNEY DOCKET NO.	CONFIRMATION NO.
13/178,074	07/07/2011	Denis Paul MASSON	PAT 6301-2	7705

26123 7590 08/26/2011

BORDEN LADNER GERVAIS LLP
Anne Kinsman
WORLD EXCHANGE PLAZA
100 QUEEN STREET SUITE 1100
OTTAWA, ON K1P 1J9
CANADA

EXAMINER	
ART UNIT	PAPER NUMBER
1725	

NOTIFICATION DATE	DELIVERY MODE
08/26/2011	ELECTRONIC

Please find below and/or attached an Office communication concerning this application or proceeding.

The time period for reply, if any, is set in the attached communication.

Notice of the Office communication was sent electronically on above-indicated "Notification Date" to the following e-mail address(es):

ipinfo@blg.com

UNITED STATES PATENT AND TRADEMARK OFFICE

Commissioner for Patents
United States Patent and Trademark Office
P.O. Box 1450
Alexandria, VA 22313-1450
www.uspto.gov

8/26/11

BORDEN LADNER GERVAIS LLP
Anne Kinsman
WORLD EXCHANGE PLAZA
100 QUEEN STREET SUITE 1100
OTTAWA ON K1P 1J9 CA CANADA

In re Application of	:	
Denis P. Masson et al.	:	DECISION ON PETITION
Application No. 13/178,074	:	TO MAKE SPECIAL UNDER
Filed: July 07, 2011	:	THE GREEN TECHNOLOGY
Attorney Docket No. PAT 6301-2	:	PILOT PROGRAM

This is a decision on the petition under 37 CFR 1.102, filed July 14, 2011, to make the above-identified application special under the pilot program for applications pertaining to Green Technologies as set forth in 74 Federal Register Notice 64666 (December 8, 2009) and amended by 75 Federal Register Notice 28554 (May 21, 2010) and 75 Federal Register Notice 69049 (November 10, 2010).

The petition is **GRANTED**.

A grantable petition to make an application special under 37 CFR 1.102 and the pilot program as set forth in 74 FR 64666 must be directed to a nonprovisional application filed under 35 USC 111(a) or be a national stage entry under 35 USC 371, exclusive of any reissue applications.

In order to qualify for special status, the following requirements must be met. 1) The application must have no more than 3 independent claims and no more than 20 total claims. 2) The application must not contain any multiple dependent claims. 3) The petition must state the basis for seeking special status, i.e., the claimed invention either: A) materially enhances the quality of the environment or B) materially contributes to: i) the discovery or development of renewable energy resources, ii) the more efficient utilization and conservation of energy resources, or iii) greenhouse gas emission reduction. 4) If the disclosure is not clear on its face that the claimed invention materially contributes under category (A) or (B), the petition must be accompanied by a statement by the applicant, assignee, or an attorney/agent registered to practice before the Office explaining how the materiality standard is met. 5) A statement that applicant will agree to make an election without traverse in a telephonic interview if a restriction requirement is made by the examiner. 6) The petition to make special must be filed electronically. 7) The petition must be filed at least one day prior to the date that a first Office Action appears in the Patent Application Information Retrieval (PAIR) system. 8) The petition must be accompanied by a request for early publication in compliance with 37 CFR 1.219 and include the publication fee as set forth in 37 CFR 1.18(d).

The requirement for a fee for consideration of the petition to make special for applications pertaining to Green Technologies has been waived.

The instant petition complies with items 1 – 8 above. Accordingly, the above-identified application has been accorded "special" status.

Telephone inquires concerning this decision should be directed to Blaine Copenheaver at 571-272-1156.

The application is being forwarded to the examiner for action on the merits commensurate with this decision.

/Blaine Copenheaver/

Blaine Copenheaver
Quality Assurance Specialist
Technology Center 1700

UNITED STATES PATENT AND TRADEMARK OFFICE

Commissioner for Patents
United States Patent and Trademark Office
P.O. Box 1450
Alexandria, VA 22313-1450
www.uspto.gov

In re Application of
Edward M. Land

Application No. 13178083

Filed: July 7,2011

Attorney Docket No. P10943-03

:
:
:DECISION ON PETITION TO MAKE SPECIAL
:UNDER 37 CFR 1.102(c)(1)
:

This is a decision on the electronic petition under 37 CFR 1.102 (c)(1), filed 21-JUL-2011 to make the above-identified application special based on applicant's age as set forth in MPEP § 708.02, Section IV.

The petition is **GRANTED**.

A grantable petition to make an application special under 37 CFR 1.102(c)(1), MPEP § 708.02, Section IV: Applicant's Age must include a statement by applicant or a registered practitioner having evidence that applicant is at least 65 years of age. No fee is required.

Accordingly, the above-identified application has been accorded "special" status and will be taken up for action by the examiner upon the completion of all pre-examination processing.

Telephone inquiries concerning this electronic decision should be directed to the Electronic Business Center at 866-217-9197.

All other inquiries concerning either the examination or status of the application should be directed to the Technology Center.

Doc code : PET.OP.AGE
Description : Petition to make special based on Age/Health

PTO/SB/130 (07-09)
Approved for use through 07/31/2012. OMB 0651- 0031
U.S. Patent and Trademark Office; U.S. DEPARTMENT OF COMMERCE
Under the Paperwork Reduction Act of 1995, no persons are required to respond to a collection of information unless it contains a valid OMB control number

PETITION TO MAKE SPECIAL BASED ON AGE FOR ADVANCEMENT OF EXAMINATION UNDER 37 CFR 1.102(c)(1)

Application Information

Application Number	13/178,083	Confirmation Number	7722	Filing Date	2011-07-07
Attorney Docket Number (optional)	P10943-03	Art Unit		Examiner	
First Named Inventor	Edward M. Land				
Title of Invention	LOW PROFILE HAND-EXTENSION/FLEXION DEVICE				

Attention: Office of Petitions
An application may be made special for advancement of examination upon filing of a petition showing that the applicant is 65 years of age, or more. No fee is required with such a petition. See 37 CFR 1.102(c)(1) and MPEP 708.02 (IV).

APPLICANT HEREBY PETITIONS TO MAKE SPECIAL FOR ADVANCEMENT OF EXAMINATION IN THIS APPLICATION UNDER 37 CFR 1.102(c)(1) and MPEP 708.02 (IV) ON THE BASIS OF THE APPLICANT'S AGE.

A grantable petition requires one of the following items:
(1) Statement by one named inventor in the application that he/she is 65 years of age, or more; or
(2) Certification by a registered attorney/agent having evidence such as a birth certificate, passport, driver's license, etc. showing one named inventor in the application is 65 years of age, or more.

Name of Inventor who is 65 years of age, or older

Given Name	Middle Name	Family Name	Suffix
Edward	M.	Land	

A signature of the applicant or representative is required in accordance with 37 CFR 1.33 and 10.18. Please see 37 CFR 1.4(d) for the format of the signature.

Select (1) or (2) :

○ (1) I am an inventor in this application and I am 65 years of age, or more.

◉ (2) I am an attorney or agent registered to practice before the Patent and Trademark Office, and I certify that I am in possession of evidence, and will retain such in the application file record, showing that the inventor listed above is 65 years of age, or more.

Signature	/Elaine P. Spector/	Date (YYYY-MM-DD)	2011-07-21
Name	Elaine P. Spector	Registration Number	40116

PTO/SB/130 (07-09)
Approved for use through 07/31/2012. OMB 0651- 0031
U.S. Patent and Trademark Office; U.S. DEPARTMENT OF COMMERCE
Under the Paperwork Reduction Act of 1995, no persons are required to respond to a collection of information unless it contains a valid OMB control number

Privacy Act Statement

The Privacy Act of 1974 (P.L. 93-579) requires that you be given certain information in connection with your submission of the attached form related to a patent application or patent. Accordingly, pursuant to the requirements of the Act, please be advised that: (1) the general authority for the collection of this information is 35 U.S.C. 2(b)(2); (2) furnishing of the information solicited is voluntary; and (3) the principal purpose for which the information is used by the U.S. Patent and Trademark Office is to process and/or examine your submission related to a patent application or patent. If you do not furnish the requested information, the U.S. Patent and Trademark Office may not be able to process and/or examine your submission, which may result in termination of proceedings or abandonment of the application or expiration of the patent.

The information provided by you in this form will be subject to the following routine uses:

1. The information on this form will be treated confidentially to the extent allowed under the Freedom of Information Act (5 U.S.C. 552) and the Privacy Act (5 U.S.C. 552a). Records from this system of records may be disclosed to the Department of Justice to determine whether the Fr eedom of Information Act requires disclosure of these records.

2. A record from this system of records may be disclosed, as a routine use, in the course of presenting evidence to a court, magistrate, or administrative tribunal, including disclosures to opposing counsel in the course of settlement negotiations.

3. A record in this system of records may be disclosed, as a routine use, to a Member of Congress submitting a request involving an individual, to whom the record pertains, when the individual has requested assistance from the Member with respect to the subject matter of the record.

4. A record in this system of records may be disclosed, as a routine use, to a contractor of the Agency having need for the information in order to perform a contract. Recipients of information shall be required to comply with the requirements of the Privacy Act of 1974, as amended, pursuant to 5 U.S.C. 552a(m).

5. A record related to an International Application filed under the Patent Cooperation Treaty in this system of records may be disclosed, as a routine use, to the International Bureau of the World Intellectual Property Organization, pursuant to the Patent Cooperation Treaty.

6. A record in this system of records may be disclosed, as a routine use, to another federal agency for purposes of National Security review (35 U.S.C. 181) and for review pursuant to the Atomic Energy Act (42 U.S.C. 218(c)).

7. A record from this system of records may be disclosed, as a routine use, to the Administrator, General Services, or his/her designee, during an inspection of records conducted by GSA as part of that agency's responsibility to recommend improvements in records management practices and programs, under authority of 44 U.S.C. 2904 and 2906. Such disclosure shall be made in accordance with the GSA regulations governing inspection of records for this purpose, and any other relevant (i.e., GSA or Commerce) directive. Such disclosure shall not be used to make determinations about indivi duals.

8. A record from this system of records may be disclosed, as a routine use, to the public after either publication of the application pursuant to 35 U.S.C. 122(b) or issuance of a patent pursuant to 35 U.S.C. 151. Further, a record may be disclosed, subject to the limitations of 37 CFR 1.14, as a routine use, to the public if the record was filed in an application which became abandoned or in which the proceedings were terminated and which application is referenced by either a published application, an application open to public inspections or an issued patent.

9. A record from this system of records may be disclosed, as a routine use, to a Federal, State, or local law enforcement agency, if the USPTO becomes aware of a violation or potential violation of law or regulation.

Doc code : PET.OP.AGE
Description : Petition to make special based on Age/Health

PTO/SB/130 (07-09)
Approved for use through 07/31/2012. OMB 0651- 0031
U.S. Patent and Trademark Office; U.S. DEPARTMENT OF COMMERCE
Under the Paperwork Reduction Act of 1995, no persons are required to respond to a collection of information unless it contains a valid OMB control number

PETITION TO MAKE SPECIAL BASED ON AGE FOR ADVANCEMENT OF EXAMINATION UNDER 37 CFR 1.102(c)(1)

Application Information

Application Number	13178092	Confirmation Number	7743	Filing Date	2011-07-07
Attorney Docket Number (optional)	IBC123US2	Art Unit	1644	Examiner	Huynh, Phuong N
First Named Inventor	Chien-Hsing Chang				
Title of Invention	Dimeric Alpha Interferon PEGylated Site-Specifically Shows Enhanced and Prolonged Efficacy in Vivo				

Attention: Office of Petitions
An application may be made special for advancement of examination upon filing of a petition showing that the applicant is 65 years of age, or more. No fee is required with such a petition. See 37 CFR 1.102(c)(1) and MPEP 708.02 (IV).

APPLICANT HEREBY PETITIONS TO MAKE SPECIAL FOR ADVANCEMENT OF EXAMINATION IN THIS APPLICATION UNDER 37 CFR 1.102(c)(1) and MPEP 708.02 (IV) ON THE BASIS OF THE APPLICANT'S AGE.

A grantable petition requires one of the following items:
(1) Statement by one named inventor in the application that he/she is 65 years of age, or more; or
(2) Certification by a registered attorney/agent having evidence such as a birth certificate, passport, driver's license, etc. showing one named inventor in the application is 65 years of age, or more.

Name of Inventor who is 65 years of age, or older

Given Name	Middle Name	Family Name	Suffix
David	M.	Goldenberg	

A signature of the applicant or representative is required in accordance with 37 CFR 1.33 and 10.18.
Please see 37 CFR 1.4(d) for the format of the signature.

Select (1) or (2) :

○ (1) I am an inventor in this application and I am 65 years of age, or more.

◉ (2) I am an attorney or agent registered to practice before the Patent and Trademark Office, and I certify that I am in possession of evidence, and will retain such in the application file record, showing that the inventor listed above is 65 years of age, or more.

Signature	/Richard A. Nakashima/	Date (YYYY-MM-DD)	2011-10-13
Name	Richard A. Nakashima	Registration Number	42023

PTO/SB/130 (07-09)
Approved for use through 07/31/2012. OMB 0651- 0031
U.S. Patent and Trademark Office; U.S. DEPARTMENT OF COMMERCE
Under the Paperwork Reduction Act of 1995, no persons are required to respond to a collection of information unless it contains a valid OMB control number

Privacy Act Statement

The Privacy Act of 1974 (P.L. 93-579) requires that you be given certain information in connection with your submission of the attached form related to a patent application or patent. Accordingly, pursuant to the requirements of the Act, please be advised that: (1) the general authority for the collection of this information is 35 U.S.C. 2(b)(2); (2) furnishing of the information solicited is voluntary; and (3) the principal purpose for which the information is used by the U.S. Patent and Trademark Office is to process and/or examine your submission related to a patent application or patent. If you do not furnish the requested information, the U.S. Patent and Trademark Office may not be able to process and/or examine your submission, which may result in termination of proceedings or abandonment of the application or expiration of the patent.

The information provided by you in this form will be subject to the following routine uses:

1. The information on this form will be treated confidentially to the extent allowed under the Freedom of Information Act (5 U.S.C. 552) and the Privacy Act (5 U.S.C. 552a). Records from this system of records may be disclosed to the Department of Justice to determine whether the Fr eedom of Information Act requires disclosure of these records.

2. A record from this system of records may be disclosed, as a routine use, in the course of presenting evidence to a court, magistrate, or administrative tribunal, including disclosures to opposing counsel in the course of settlement negotiations.

3. A record in this system of records may be disclosed, as a routine use, to a Member of Congress submitting a request involving an individual, to whom the record pertains, when the individual has requested assistance from the Member with respect to the subject matter of the record.

4. A record in this system of records may be disclosed, as a routine use, to a contractor of the Agency having need for the information in order to perform a contract. Recipients of information shall be required to comply with the requirements of the Privacy Act of 1974, as amended, pursuant to 5 U.S.C. 552a(m).

5. A record related to an International Application filed under the Patent Cooperation Treaty in this system of records may be disclosed, as a routine use, to the International Bureau of the World Intellectual Property Organization, pursuant to the Patent Cooperation Treaty.

6. A record in this system of records may be disclosed, as a routine use, to another federal agency for purposes of National Security review (35 U.S.C. 181) and for review pursuant to the Atomic Energy Act (42 U.S.C. 218(c)).

7. A record from this system of records may be disclosed, as a routine use, to the Administrator, General Services, or his/her designee, during an inspection of records conducted by GSA as part of that agency's responsibility to recommend improvements in records management practices and programs, under authority of 44 U.S.C. 2904 and 2906. Such disclosure shall be made in accordance with the GSA regulations governing inspection of records for this purpose, and any other relevant (i.e., GSA or Commerce) directive. Such disclosure shall not be used to make determinations about indivi duals.

8. A record from this system of records may be disclosed, as a routine use, to the public after either publication of the application pursuant to 35 U.S.C. 122(b) or issuance of a patent pursuant to 35 U.S.C. 151. Further, a record may be disclosed, subject to the limitations of 37 CFR 1.14, as a routine use, to the public if the record was filed in an application which became abandoned or in which the proceedings were terminated and which application is referenced by either a published application, an application open to public inspections or an issued patent.

9. A record from this system of records may be disclosed, as a routine use, to a Federal, State, or local law enforcement agency, if the USPTO becomes aware of a violation or potential violation of law or regulation.

UNITED STATES PATENT AND TRADEMARK OFFICE

Commissioner for Patents
United States Patent and Trademark Office
P.O. Box 1450
Alexandria, VA 22313-1450
www.uspto.gov

In re Application of
Chien-Hsing Chang

Application No. 13178092

Filed: July 7,2011

Attorney Docket No. IBC123US2

:
:
:DECISION ON PETITION TO MAKE SPECIAL
:UNDER 37 CFR 1.102(c)(1)
:

This is a decision on the electronic petition under 37 CFR 1.102 (c)(1), filed 13-OCT-2011 to make the above-identified application special based on applicant's age as set forth in MPEP § 708.02, Section IV.

The petition is **GRANTED**.

A grantable petition to make an application special under 37 CFR 1.102(c)(1), MPEP § 708.02, Section IV: Applicant's Age must include a statement by applicant or a registered practitioner having evidence that applicant is at least 65 years of age. No fee is required.

Accordingly, the above-identified application has been accorded "special" status and will be taken up for action by the examiner upon the completion of all pre-examination processing.

Telephone inquiries concerning this electronic decision should be directed to the Electronic Business Center at 866-217-9197.

All other inquiries concerning either the examination or status of the application should be directed to the Technology Center.

UNITED STATES PATENT AND TRADEMARK OFFICE

UNITED STATES DEPARTMENT OF COMMERCE
United States Patent and Trademark Office
Address: COMMISSIONER FOR PATENTS
P.O. Box 1450
Alexandria, Virginia 22313-1450
www.uspto.gov

APPLICATION NO.	FILING DATE	FIRST NAMED INVENTOR	ATTORNEY DOCKET NO.	CONFIRMATION NO.
13/178,150	07/07/2011	Ilker Taskaya	AXT-001C1	7857

42532 7590 03/30/2012

PROSKAUER ROSE LLP
ONE INTERNATIONAL PLACE
BOSTON, MA 02110

EXAMINER	
BARRON JR, GILBERTO	

ART UNIT	PAPER NUMBER
2432	

NOTIFICATION DATE	DELIVERY MODE
03/30/2012	ELECTRONIC

Please find below and/or attached an Office communication concerning this application or proceeding.

The time period for reply, if any, is set in the attached communication.

Notice of the Office communication was sent electronically on above-indicated "Notification Date" to the following e-mail address(es):

DocketingPatentBoston@proskauer.com
oandrews@proskauer.com

UNITED STATES PATENT AND TRADEMARK OFFICE

Commissioner for Patents
United States Patent and Trademark Office
P.O. Box 1450
Alexandria, VA 22313-1450
www.uspto.gov

PROSKAUER ROSE LLP
ONE INTERNATIONAL PLACE
BOSTON MA 02110

Applicant: Taskaya et al.
Appl. No.: 13/178,150
Filing Date: July 7, 2011
Title: SEGMENTED MAPPING
Attorney Docket No.: AXT-001C1
Pub. No.: US 2011/0314300 A1
Pub. Date: December 22, 2011

This is a decision on the request for republication of patent application publication under 37 CFR 1.221(a), filed on March 20, 2012, for the above-identified application.

The request under 37 CFR 1.221(a) is DISMISSED.

37 CFR 1.221(a) requires "a copy of the application in compliance with the Office electronic filing system requirements and be accompanied by the publication fee set forth in § 1.18(d) and the processing fee set forth in § 1.17(i)". If the request for republication does not comply with the electronic filing system requirements, the republication will not take place and the publication fee set forth in § 1.18(d) will be refunded. The processing fee will be retained.

The applicant did not supply a copy of the application in compliance with the Office electronic filing system, as required by 37 CFR 1.221(a) because **the applicant submitted the papers as a "Document for an existing application", which are entered into the application file, and not as a "Pre-Grant Publication" submission**. The request for republication does not comply with the electronic filing system requirements, thus republication will not take place.

Any request for republication under 37 CFR 1.221(a), must be submitted via the EFS system, as a Pre-Grant publication submission and must include a copy of the application in compliance with the Office electronic filing system requirements. The applicant is directed to the following website for additional instructions on how to submit a Pre-Grant Publication submission via the electronic filing system:

http://www.uspto.gov/ebc/portal/efs/pgpub_quickstart.pdf

Any questions or requests for reconsideration of the decision should be addressed as follows:

By mail to: Mail Stop PGPUB
Commissioner for Patents
P.O. Box 1450
Alexandria, Va. 22313-1450

By facsimile: 571-273-8300

Telephone inquiries regarding this correspondence should be directed to The Office of Data Management at 571-272-4200.

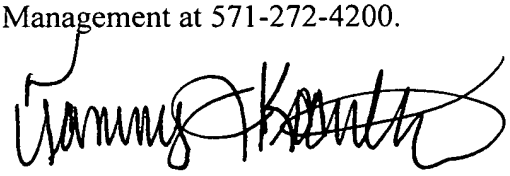

Tammy J. Koontz
Office of Data Management
United States Patent & Trademark Office

UNITED STATES PATENT AND TRADEMARK OFFICE

UNITED STATES DEPARTMENT OF COMMERCE
United States Patent and Trademark Office
Address: COMMISSIONER FOR PATENTS
P.O. Box 1450
Alexandria, Virginia 22313-1450
www.uspto.gov

APPLICATION NO.	FILING DATE	FIRST NAMED INVENTOR	ATTORNEY DOCKET NO.	CONFIRMATION NO.
13/178,205	07/07/2011	Chih-Hsiang Wu	62019-8019.US01	7957

25096 7590 08/02/2011

PERKINS COIE LLP
PATENT-SEA
P.O. BOX 1247
SEATTLE, WA 98111-1247

EXAMINER	
ART UNIT	PAPER NUMBER
2617	

NOTIFICATION DATE	DELIVERY MODE
08/02/2011	ELECTRONIC

Please find below and/or attached an Office communication concerning this application or proceeding.

The time period for reply, if any, is set in the attached communication.

Notice of the Office communication was sent electronically on above-indicated "Notification Date" to the following e-mail address(es):

patentprocurement@perkinscoie.com

UNITED STATES PATENT AND TRADEMARK OFFICE

Commissioner for Patents
United States Patent and Trademark Office
P.O. Box 1450
Alexandria, VA 22313-1450
www.uspto.gov

PERKINS COIE LLP
PATENT-SEA
P.O. BOX 1247
SEATTLE WA 98111-1247

In re Application of:
WU, CHIH-HSIANG
Serial No.: 13/178,205
Filed: July 7, 2011

Title: **METHOD AND APPARATUS FOR HANDLING MEASUREMENT CONFIGURATION AND LOGGING IN A WIRELESS COMMUNICATION SYSTEM**

DECISION ON PETITION TO MAKE SPECIAL FOR NEW APPLICATION UNDER 37 C.F.R. § 1.102 & M.P.E.P. § 708.02

This is a decision on the petition filed on July 7, 2011, to make the above-identified application special for accelerated examination procedure under 37 C.F.R. § 1.102(d).

The petition to make the application special is **DISMISSED**.

REGULATION AND PRACTICE

A grantable petition to make special under 37 C.F.R. § 1.102(d) and pursuant to the "Change to Practice for Petitions in Patent Applications to Make Special and for Accelerated Examination" published in the Federal Register on June 26, 2006 (71 Fed. Reg. 36323), must satisfy the following conditions:

I. Conditions Regarding the Application:

1. the application must be a non-reissue utility or design application filed under 37 CFR 1.111(a);

2. the application, the petition and the required fees must be filed electronically using the USPTO's electronic filing system (EFS), or EFS-web; if not filed electronically, a statement asserting that EFS and EFS-web were not available during the normal business hours.

3. at the time of filing, the application must be complete under 37 CFR 1.51 and in condition for examination;

4. the application must contain three or fewer independent claims and twenty or fewer total claims and the claims must be directed to a single invention. Multiple dependent claims are not permitted.

II. Conditions Regarding the Petition:

The petition must:

1. be filed with the application;

2. include a statement that applicant agrees not to separately argue the patentability of any independent claim during any appeal in the application;

3. include a statement that applicant agrees to make an election without traverse in a telephone interview.

4. include a statement that applicant agrees to conduct such an interview when requested by the examiner.

5. include a statement, made based on a good faith belief, that a preexamination search in compliance with the following requirements, was conducted, including an identification of the filed of search by United States class and subclass, where applicable, and for database searches, the search logic or chemical structure or sequence used as a query, the name of the file(s) searched and the database service, and the date of the search.

The preexamination search must:

5.1 involve U.S. patents and patent application publications, foreign patent documents, and non-patent literature, unless the applicant can justify with reasonable certainty that no references more pertinent than those already identified are likely to be found in the eliminated sources and includes such a justification with this statement;

5.2. be directed to the claimed invention and encompass all of the features of the claims, giving the claims the broadest reasonable interpretation;

5.3. encompass the disclosed features that may be claimed.

6. must provide in support of the petition an accelerated examination support document. An accelerated examination support document must include:

6.1. an information disclosure statement (IDS) in compliance with 37 CFR 1.98 citing each reference deemed most closely related to the subject matter of each of the claims;

6.2. an identification of all the limitations in the claims that are disclosed by the reference specifying where the limitation is disclosed in the cited reference;

6.3. a detailed explanation of how each of the claims are patentable over the references cited with particularity required by 37 CFR 1.111(b) and (c);

6.4. a concise statement of the utility of the invention as defined in each of the independent claims (unless the application is a design application);

6.5. a showing of where each limitation of the claims finds support under 35 USC 112, first paragraph, in the written description of the specification. If applicable, the showing must also identify: (1) each means- (or step) plus-function claim element that invokes consideration under 35 USC 112, sixth paragraph; and (2) the structure, material, or acts in the specification that corresponds to each means- (or step) plus-function claim element that invokes consideration under 35 USC 112, sixth paragraph; if the application claims the benefit of one or more applications under title 35, United States Code, the showing must also include where each limitation of the claims finds support under 35 USC 112, first paragraph, in each such application in which such supports exists;

6.6. an identification of any cited references that may be disqualified under 35 USC 103(c).

REVIEW OF FACTS

The petition fails to comply with the conditions set forth under section II items 5.2 and 5.3.

For the reason cited above, the petition fails to meet the required conditions to be accorded special status under the accelerated examination procedure.

Regarding the requirements in section II items 5.2 and 5.3 above, additional search is required in class 455/423. If applicable prior art is discovered in this new search, a revised support document must be provided meeting the requirements of section II, items 6.1-6.3 above.

DECISION

For the above-stated reasons, the petition is **dismissed**. The application will therefore be taken up by the examiner for action in its regular turn.

Petitioner is given a single opportunity to perfect the petition. Any request for reconsideration of this decision must be submitted within 1 (one) month or 30 (thirty) days, whichever is longer, (no extension of time under 37 CFR 1.136(a)) from the date of this decision in order to be considered timely. Any request for reconsideration must address the deficiencies indicated above.

Petitioner is reminded that, upon granting of the special status of the application on request for reconsideration, the application will be processed expeditiously. However, due to the dismissal of the instant petition, examination may not be completed within twelve months of the filing date of the application.

Any inquiry regarding this decision should be directed to Ken Wieder, Quality Assurance Specialist, at (571) 272-2986.

/Kenneth A. Wieder/

Kenneth A. Wieder
Quality Assurance Specialist
Technology Center 2600
Communications

UNITED STATES PATENT AND TRADEMARK OFFICE

UNITED STATES DEPARTMENT OF COMMERCE
United States Patent and Trademark Office
Address: COMMISSIONER FOR PATENTS
P.O. Box 1450
Alexandria, Virginia 22313-1450
www.uspto.gov

APPLICATION NO.	FILING DATE	FIRST NAMED INVENTOR	ATTORNEY DOCKET NO.	CONFIRMATION NO.
13/178,205	07/07/2011	Chih-Hsiang Wu	62019-8019.US01	7957

25096 7590 09/08/2011

PERKINS COIE LLP
PATENT-SEA
P.O. BOX 1247
SEATTLE, WA 98111-1247

EXAMINER	
BOST, DWAYNE D	
ART UNIT	**PAPER NUMBER**
2617	

NOTIFICATION DATE	DELIVERY MODE
09/08/2011	ELECTRONIC

Please find below and/or attached an Office communication concerning this application or proceeding.

The time period for reply, if any, is set in the attached communication.

Notice of the Office communication was sent electronically on above-indicated "Notification Date" to the following e-mail address(es):

patentprocurement@perkinscoie.com

UNITED STATES PATENT AND TRADEMARK OFFICE

Commissioner for Patents
United States Patent and Trademark Office
P.O. Box 1450
Alexandria, VA 22313-1450
www.uspto.gov

PERKINS COIE LLP
PATENT-SEA
P.O. BOX 1247
SEATTLE WA 98111-1247

In re Application of:
WU, CHIH-HSIANG
Serial No.: 13/178,205
Filed: July 7, 2011

Title: **METHOD AND APPARATUS FOR HANDLING MEASUREMENT CONFIGURATION AND LOGGING IN A WIRELESS COMMUNICATION SYSTEM**

DECISION ON PETITION TO MAKE SPECIAL FOR NEW APPLICATION UNDER 37 C.F.R. § 1.102 & M.P.E.P. § 708.02

The petition requesting reconsideration to make the application special filed September 1, 2011 is **GRANTED**.

The application is eligible for accelerated examination and the petition complies with the conditions for granting the application special status pursuant to the "Change to Practice for Petitions in Patent Applications to Make Special and for Accelerated Examination" published June 26, 2006, in the Federal Register. (71 Fed. Reg. 36323).

The prosecution of the instant application will be conducted expeditiously according to the following guidelines.

1. The application will be docketed to an examiner and taken up for action within two weeks of the date of this decision.

2. Restriction Practice:
   If the examiner determines that the claims are not directed to a single invention, a telephone request to elect one single invention will be made pursuant to MPEP 812.01. As a prerequisite to the grant of this petition, the applicant has agreed to make an oral election, by telephone, without traverse. If the applicant refuses to make an election without traverse, or the examiner cannot reach the applicant after a reasonable effort, the

examiner will treat the first claimed invention (invention defined by claim 1) as having being constructively elected without traverse for examination.

3. Office action:
If it is determined that, after appropriate consultation, there is a potential rejection or any other issue to be addressed, the examiner will telephone the applicant and arrange an interview to discuss and resolve the issue. An Office action, other than a Notice of Allowance and Fee(s) Due (Notice of Allowance), will not be issued unless either: 1) an interview was conducted but did not result in agreed to action that places the application in condition for allowance, or, 2) a determination is made that an interview would be unlikely to result in the application being placed in condition for allowance, and 3) an internal conference has been held to review any rejection of any claim.

4. Time for Reply:
An Office action other than a Notice of Allowance or a final Office action will set a shortened statutory period of one month or thirty days, whichever is longer, for reply with no extension of time available under 37 CFR 1.136(a). Failure to timely file a reply within this non-extendible period for reply will result in the abandonment of the application.

5. Reply by Applicant:
A timely reply to an Office action other than the Notice of Allowance must be submitted electronically via EFS or EFS-web and limited to addressing the rejections, objections and requirement made. Any amendment that attempts to: 1) add claims which would result in more than three pending independent claims or more than twenty pending total claims; 2) present claims not encompassed by the pre-examination search or an updated accelerated examination support document; or 3) present claims that are directed a non-elected invention or an invention other than that previously claimed and examined in the application, will be treated as not fully responsive and will not be entered.

For any amendment to the claims (including any new claim) that is not encompassed by the accelerated examination support document, applicant must provide an updated accelerated examination support document that encompasses the amended or new claims at the time of filing of the amendment.

To proceed expeditiously with the examination, it is recommended that a reply with amendments made to any claim or with any new claim being added be accompanied by an updated accelerated examination support document or a statement explaining how the amended or new claim is supported by the original accelerated examination support document.

6. Information Disclosure Statement (IDS):
Any IDS filed during prosecution must be submitted electronically via EFS or EFS-web, accompanied by an updated accelerated examination support document, and be in compliance with 37 CFR 1.97 and 1.98.

7. Post-Allowance Processing:
To expedite processing of the allowed application into a patent, the applicant must: 1) pay the required fees within one month of the date of the Notice of Allowance, and 2) not file any post allowance papers not required by the Office. In no event may the issue fee be paid and accepted later than three months from the date of the Notice of Allowance.

8. After-Final and Appeal Procedures:
To expedite prosecution, after receiving the final Office action, applicant must: 1) promptly file a notice of appeal, an appeal brief and appeal fees; and 2) not request a pre-appeal brief conference.

   Any amendment, affidavit or other evidence filed after final Office action must comply with applicable rules and the requirements outlined in numbered paragraphs 5 and 6 above.

   On appeal, the application will proceed according to normal appeal procedures. After appeal, the application will again be treated special.

9. Proceedings Outside the Normal Examination Process:
If the application becomes involved in a proceeding that is outside the normal examination process (e.g., a secrecy order, national security review, interference proceeding, petitions under 37 CFR 1.181, 182 or 183), the application will be treated special before and after such proceeding.

10. Final Disposition:
The twelve month goal of this accelerated examination procedure ends with a final disposition. The mailing of a final Office action, a Notice of Allowance, the filing of a Notice of Appeal, or the filing of a Request for Continued Examination (RCE) is the final disposition.

If, during prosecution, a paper is not filed electronically using EFS-web, a reply is filed but is not fully responsive, the application is involved in an appeal, or a proceeding outside normal examination process, the application will still be examined expeditiously, however, the final disposition may occur more than twelve months from the filing of the application.

Any inquiry regarding this decision should be directed to Ken Wieder, Quality Assurance Specialist, at (571) 272-2986.

/Kenneth A. Wieder/

Kenneth A. Wieder
Quality Assurance Specialist
Technology Center 2600
Communications

UNITED STATES PATENT AND TRADEMARK OFFICE

Commissioner for Patents
United States Patent and Trademark Office
P.O. Box 1450
Alexandria, VA 22313-1450
www.uspto.gov

DANISCO US INC.
ATTENTION: LEGAL DEPARTMENT
925 PAGE MILL ROAD
PALO ALTO CA 94304

MAILED
SEP 26 2011
OFFICE OF PETITIONS

In re Application of :
Aehle, et al. : DECISION ON PETITION
Application No. 13/178,227 :
Deposited: July 7, 2011 :
Atty. Docket No. 30864-D1 :

This is a decision on the petition under 37 CFR 1.57(a)(3), filed September 14, 2011, requesting that the above-referenced application be accorded a filing date of July 7, 2011.

Application papers in the above-identified application were filed on July 7, 2011. However, on August 1, 2011, the Office of Patent Application Processing mailed applicants a "Notice of Incomplete Nonprovisional Application," notifying applicants, *inter alia*, that the application papers had not been accorded a filing date because the application was deposited without a complete specification as prescribed by 35 U.S.C. 112.

In response, applicants timely filed this petition. In which, applicants acknowledge inadvertently omitting a copy of the specification from the parent application on submission of the instant divisional application. Applicants argued, however, that the filing date of July 7, 2011, should still be accorded pursuant to § 1.57(a)(3).

On September 21, 2004, § 1.57 was added to read, in pertinent part that:

> (a) Subject to the conditions and requirements of this paragraph, if all or a portion of the specification or drawing(s) is inadvertently omitted from an application, but the application contains … a claim under 1.78 for the benefit of a prior-filed provisional, nonprovisional or international application, that was present on the filing

> date of the application, and the inadvertently omitted portion of the specification or drawing(s) is completely contained in the prior-filed application, the claim under … § 1.78 shall also be considered an incorporation by reference of the prior-filed application as to the inadvertently omitted portion of the specification or drawing(s).
>
> (1) The application must be amended to include the inadvertently omitted portion of the specification or drawing(s) within any time period set by the Office, but in no case later than the close of prosecution as defined by § 1.114(b), or abandonment of the application, whichever occurs earlier;
>
> (3) If an application is not otherwise entitled to a filing date under § 1.53(b), the amendment must be by way of a petition pursuant to this paragraph accompanied by the fee set forth in § 1.17(f).

It is noted that the application as filed included a claim under 1.78 for the benefit of prior-filed application No. 11/317,110. Thus, pursuant to 1.57, the application as filed is considered to have incorporated by reference the prior filed application as to the inadvertently omitted specification.

The present petition does not comply with (1) above. Applicants must provide the complete specification prescribed by 35 U.S.C. 112, which includes the claims. Thus far applicants have only provided the specification. The preliminary amendment submitted upon filing cancelled claims 1-118. However, claims 1-118 are not of record in the application yet and must be presented before they can be cancelled. Applicants must submit an amendment that includes a complete specification, including the claims, and an abstract.

In view thereof, the petition is **DISMISSED**.

Further correspondence with respect to this matter should be addressed as follows:

By mail: Mail Stop PETITION
Commissioner for Patents
Post Office Box 1450
Alexandria, VA 22313-1450

By hand: U.S. Patent and Trademark Office
Customer Service Window, Mail Stop Petition
Randolph Building
401 Dulany Street
Alexandria, VA 22314

By FAX: (571) 273-8300 - ATTN: Office of Petitions

By internet: EFS-Web
www.uspto.gov/ebc/efs_help.html
(for help using EFS-Web call the
Patent Electronic Business Center
at (866) 217-9197)

Telephone inquiries concerning this matter may be directed to Senior Petitions Attorney Shirene Willis Brantley at (571) 272-3230.

Chris Bottorff
Supervisor
Office of Petitions

UNITED STATES PATENT AND TRADEMARK OFFICE

Commissioner for Patents
United States Patent and Trademark Office
P.O. Box 1450
Alexandria, VA 22313-1450
www.uspto.gov

DANISCO US INC.
ATTENTION: LEGAL DEPARTMENT
925 PAGE MILL ROAD
PALO ALTO CA 94304

MAILED
OCT 19 2011
OFFICE OF PETITIONS

In re Application of :
Aehle, et al. : DECISION ON PETITION
Application No. 13/178,227 :
Deposited: July 7, 2011 :
Atty. Docket No. 30864-D1 :

This is a decision on the renewed petition under 37 CFR 1.57(a)(3), filed September 30, 2011, requesting that the above-referenced application be accorded a filing date of July 7, 2011.

Application papers in the above-identified application were filed on July 7, 2011. However, on August 1, 2011, the Office of Patent Application Processing mailed applicants a "Notice of Incomplete Nonprovisional Application," notifying applicants, *inter alia*, that the application papers had not been accorded a filing date because the application was deposited without a complete specification as prescribed by 35 U.S.C. 112.

In response, applicants timely filed a petition under 37 CFR 1.57(a)(3) on September 14, 2011. On September 26, 2011, the petition was dismissed because applicants did not submit the claims from prior application No. 11/317,110.

The present renewed petition was filed on September 30, 2011. Applicants acknowledge inadvertently omitting a copy of the specification from the parent application on submission of the instant divisional application. Applicants argued, however, that the filing date of July 7, 2011, should still be accorded pursuant to § 1.57(a)(3).

On September 21, 2004, § 1.57 was added to read, in pertinent part that:

> (a) Subject to the conditions and requirements of this paragraph, if all or a portion of the specification or drawing(s) is inadvertently omitted from an application, but the application contains … a claim under 1.78 for the benefit of a prior-filed provisional, nonprovisional or international application, that was present on the filing date of the application, and the inadvertently omitted portion of the specification or drawing(s) is completely contained in the prior-filed application, the claim under … § 1.78 shall also be considered an incorporation by reference of the prior-filed application as to the inadvertently omitted portion of the specification or drawing(s).
>
> (1) The application must be amended to include the inadvertently omitted portion of the specification or drawing(s) within any time period set by the Office, but in no case later than the close of prosecution as defined by § 1.114(b), or abandonment of the application, whichever occurs earlier;
>
> (3) If an application is not otherwise entitled to a filing date under § 1.53(b), the amendment must be by way of a petition pursuant to this paragraph accompanied by the fee set forth in § 1.17(f).

It is noted that the application as filed included a claim under 1.78 for the benefit of prior-filed application No. 11/317,110. Thus, pursuant to 1.57, the application as filed is considered to have incorporated by reference the prior filed application as to the inadvertently omitted specification.

The present petition does not comply with (1) above. The petition includes a copy of the specification, including the claims, from Application No. 11/317,110 and an amendment. However, the amendment does not seek to add the copy of the specification, including the claims, to the application.

The amendment requests changes to a specification that has never been added by amendment. For example, the amendment seeks to cancel claims 1-23. However, since a claims 1-23 have never been added by amendment, claims 1-23 do not exist that can be cancelled.

In view thereof, the petition is **DISMISSED.**

Any request for reconsideration should include an amendment adding the specification, including the claims, from Application No. 11/317,110 to the instant application. The Office recommends Applicants refrain from filing a preliminary amendment making changes to the specification and claims until after relief is granted under 37 C.F.R. § 1.57(a).

Applicants have submitted two $400.00 petition fees. Only one is required. Deposit account no. 07-1048 will be refunded $400.00.

Further correspondence with respect to this matter should be addressed as follows:

By mail: Mail Stop PETITION
Commissioner for Patents
Post Office Box 1450
Alexandria, VA 22313-1450

By hand: U.S. Patent and Trademark Office
Customer Service Window, Mail Stop Petition
Randolph Building
401 Dulany Street
Alexandria, VA 22314

By FAX: (571) 273-8300 - ATTN: Office of Petitions

By internet: EFS-Web
www.uspto.gov/ebc/efs_help.html
(for help using EFS-Web call the Patent Electronic Business Center at (866) 217-9197)

Telephone inquiries concerning this matter may be directed to Senior Petitions Attorney Shirene Willis Brantley at (571) 272-3230.

Chris Bottorff
Supervisor
Office of Petitions

UNITED STATES PATENT AND TRADEMARK OFFICE

Commissioner for Patents
United States Patent and Trademark Office
P.O. Box 1450
Alexandria, VA 22313-1450
www.uspto.gov

MAILED
OCT 26 2011
OFFICE OF PETITIONS

DANISCO US INC.
ATTENTION: LEGAL DEPARTMENT
925 PAGE MILL ROAD
PALO ALTO CA 94304

In re Application of :
Aehle, et al. : DECISION ON PETITION
Application No. 13/178,227 :
Deposited: July 7, 2011 :
Atty. Docket No. 30864-D1 :

This is a decision on the renewed petition under 37 CFR 1.57(a)(3), filed October 19, 2011, requesting that the above-referenced application be accorded a filing date of July 7, 2011.

Application papers in the above-identified application were filed on July 7, 2011. However, on August 1, 2011, the Office of Patent Application Processing mailed applicants a "Notice of Incomplete Nonprovisional Application," notifying applicants, *inter alia*, that the application papers had not been accorded a filing date because the application was deposited without a complete specification as prescribed by 35 U.S.C. 112.

In response, applicants timely filed a petition under 37 CFR 1.57(a)(3), which was dismissed on September 26, 2011. Applicants filed a renewed petition on September 30, 2011, which was dismissed on October 13, 2011. The present renewed petition was filed on October 19, 2011. Applicants acknowledge inadvertently omitting a copy of the specification from the parent application on submission of the instant divisional application. Applicants argued, however, that the filing date of July 7, 2011, should still be accorded pursuant to § 1.57(a)(3).

On September 21, 2004, § 1.57 was added to read, in pertinent part that:

> (a) Subject to the conditions and requirements of this paragraph, if all or a portion of the specification or drawing(s) is inadvertently omitted from an application, but the application contains … a claim under 1.78 for the benefit of a prior-filed provisional, nonprovisional or international application, that was present on the filing date of the application, and the inadvertently omitted portion of the specification or drawing(s) is completely contained in the prior-filed application, the claim under … § 1.78 shall also be considered an incorporation by reference of the prior-filed application as to the inadvertently omitted portion of the specification or drawing(s).
>
> (1) The application must be amended to include the inadvertently omitted portion of the specification or drawing(s) within any time period set by the Office, but in no case later than the close of prosecution as defined by § 1.114(b), or abandonment of the application, whichever occurs earlier;
>
> (3) If an application is not otherwise entitled to a filing date under § 1.53(b), the amendment must be by way of a petition pursuant to this paragraph accompanied by the fee set forth in § 1.17(f).

It is noted that the application as filed included a claim under 1.78 for the benefit of prior-filed application No. 11/317,110. Thus, pursuant to 1.57, the application as filed is considered to have incorporated by reference the prior filed application as to the inadvertently omitted specification.

The instant petition includes an amendment adding the inadvertently omitted specification, claims, and abstract and a copy of the prior-filed application. The $400.00 petition fee was paid on September 14, 2011.

In view of the incorporation by reference of the prior application, the specification, claims and abstract supplied on October 19, 2011, would not constitute new matter if they were part of the original disclosure of the prior application. Of course, the examiner is expected to compare the specification, claims, and abstract supplied on October 19, 2011, to the disclosure of prior application No. 11/317,110 in order to verify that they are an accurate copy of the prior

specification, claims, and abstract and that they contain no new matter.

In view thereof, the petition is **GRANTED**.

The application is being forwarded to the Office of Patent Application Processing (OPAP) for **according of a filing date of July 7, 2011**, as a divisional application under 37 CFR 1.53(b) of prior application No. 11/317,110, including the copy of specification, claims, and abstract from the prior application supplied on October 19, 2011. Applicants will receive appropriate notifications regarding the fees owed, if any, and other information in due course from OPAP.

Telephone inquiries concerning this matter may be directed to Senior Petitions Attorney Shirene Willis Brantley at (571) 272-3230.

Chris Bottorff
Supervisor
Office of Petitions

UNITED STATES PATENT AND TRADEMARK OFFICE

UNITED STATES DEPARTMENT OF COMMERCE
United States Patent and Trademark Office
Address: COMMISSIONER FOR PATENTS
P.O. Box 1450
Alexandria, Virginia 22313-1450
www.uspto.gov

APPLICATION NO.	FILING DATE	FIRST NAMED INVENTOR	ATTORNEY DOCKET NO.	CONFIRMATION NO.
13/178,285		Gregory J. Sherwood	279.D59US2	8090

45458 7590 07/18/2011
SCHWEGMAN, LUNDBERG & WOESSNER/BSC-CRM
PO BOX 2938
MINNEAPOLIS, MN 55402

EXAMINER	
ART UNIT	PAPER NUMBER
3766	

NOTIFICATION DATE	DELIVERY MODE
07/18/2011	ELECTRONIC

Please find below and/or attached an Office communication concerning this application or proceeding.

The time period for reply, if any, is set in the attached communication.

Notice of the Office communication was sent electronically on above-indicated "Notification Date" to the following e-mail address(es):

uspto@slwip.com
request@slwip.com

UNITED STATES PATENT AND TRADEMARK OFFICE

Commissioner for Patents
United States Patent and Trademark Office
P.O. Box 1450
Alexandria, VA 22313-1450
www.uspto.gov

SCHWEGMAN, LUNDBERG & WOESSNER/BSC-CRM
PO BOX 2938
MINNEAPOLIS MN 55402

In re Application of:
SHERWOOD, GREGORY J.
Serial No.: 13/178285
Filed: March 7, 2011
Attorney Docket No. : 279.D59US2
Title: METHOD AND APPARATUS FOR SOLID STATE PULSE THERAPY CAPACITOR

DECISION ON A REQUEST TO PARTICIPATE IN PCT/PATENT PROSECUTION HIGHWAY PROGRAM AND PETITION TO MAKE SPECIAL UNDER CFR 1.102(a)

This is a decision on the request to participate in the Patent Prosecution Highway (PPH) program and the petition under 37 CFR 1.102(a), filed July 7, 2011 to make the above-identified application special.

The request and petition are **granted.**

A grantable request to participate in the PPH pilot program and petition to make special require:

(1) The U.S. application must validly claim priority under 35 U.S.C. 119(a) to one or more PCT applications filed in the JPO, EPO, KIPO, or USPTO;
(2) Applicant must submit a copy of the allowable/patentable claim(s) from the PCT application(s) latest international work product (the written opinion or the IPER) along with an English translation thereof and a statement that the English translation is accurate;
(3) All the claims in the U.S. application must sufficiently correspond or be amended to sufficiently correspond to the allowable/patentable claim(s) in the PCT application(s);
(4) Examination of the U.S. application has not begun;
(5) Applicant must submit a copy of the latest international work product from the PCT application containing the allowable/patentable claim(s) along with an English translation thereof and a statement that the English translation is accurate; and
(6) Applicant must submit an IDS listing the documents cited by the PCT examiner in the international work product along with copies of documents except U.S. patents or U.S. patent application publications.

In light of the petition being properly submitted, the request to participate in the PPH program and the petition comply with the above requirements. Accordingly, the above-identified application has been accorded "special" status.

The applicant is encouraged to cite and submit all relevant prior art references, if any, to facilitate examination in this application.

Response must be filed via EFS-Web. Telephone inquiries concerning this decision should be directed to Henry C. Yuen, at 571-272-4856.

Petition is **granted**.

/Henry C. Yuen/

Henry C. Yuen
Special Programs Examiner
Technology Center 3700
Tel: 571-272-4856

UNITED STATES PATENT AND TRADEMARK OFFICE

Commissioner for Patents
United States Patent and Trademark Office
P.O. Box 1450
Alexandria, VA 22313-1450
www.uspto.gov

MAILED

AUG 09 2011

OFFICE OF PETITIONS

OSHA LIANG L.L.P.
TWO HOUSTON CENTER
909 FANNIN, SUITE 3500
HOUSTON TX 77010

In re Application of	:	
LIMPAECHER, et al	:	
Application No. 13/178,319	:	DECISION ON PETITION
Filed: July 7, 2011	:	TO MAKE SPECIAL UNDER
Attorney Docket No. 17595/003002	:	37 CFR 1.102(c)(1)
	:	

This is a decision on the petition under 37 CFR 1.102(c)(1), filed July 7, 2011, to make the above-identified application special based on applicant's age as set forth in M.P.E.P. § 708.02, Section IV.

The petition is **GRANTED**.

A grantable petition to make an application special under 37 CFR 1.102(c)(1) and MPEP § 708.02, Section IV: Applicant's Age must be accompanied by evidence showing that at least one of the applicants is 65 years of age, or more, such as a birth certificate or a statement by applicant. No fee is required

The instant petition includes a statement made by registered attorney Aly Z. Dossa, which will be treated as the result of the attorney having evidence that at least one of the applicants is 65 years of age or more. In the event that such evidence is not with the attorney, the Office should be notified immediately. Accordingly, the above-identified application has been accorded "special" status.

Telephone inquiries concerning this decision should be directed to undersigned at (571) 272-6735.

All other inquiries concerning either the examination or status of the application should be directed to the Technology Center at (571) 272-2800.

The application is being forwarded to Technology Center Art Unit 2838 for action on the merits commensurate with this decision.

/Diane C. Goodwyn/
Diane C. Goodwyn
Petitions Examiner
Office of Petitions

UNITED STATES PATENT AND TRADEMARK OFFICE

Commissioner for Patents
United States Patent and Trademark Office
P.O. Box 1450
Alexandria, VA 22313-1450
www.uspto.gov

James E. Larson, Esq.
11199 69th Street North
Largo FL 33773

MAILED

AUG 30 2011

OFFICE OF PETITIONS

In re Application of :
Richard A. Nace :
Application No. 13/178,447 : DECISION ON PETITION
Filed: July 7, 2011 : TO MAKE SPECIAL UNDER
Attorney Docket No. 1440.50 : 37 CFR 1.102(c)(1)
:

This is a decision on the petition under 37 CFR 1.102(c)(1), filed August 10, 2011, to make the above-identified application special based on applicant's age as set forth in M.P.E.P. § 708.02, Section IV.

The petition is **GRANTED**.

A grantable petition to make an application special under 37 CFR 1.102(c)(1) and MPEP § 708.02, Section IV: Applicant's Age must be accompanied by evidence showing that at least one of the applicants is 65 years of age, or more, such as a birth certificate or a statement by applicant. No fee is required

The instant petition includes a statement from the attorney of record declaring that he is in possession of such evidence that shows the applicant, Richard A. Nace is 65 years of age or older. Accordingly, the above-identified application has been accorded "special" status.

Telephone inquiries concerning this decision should be directed to Terri Johnson at 571-272-2991.

All other inquiries concerning either the examination or status of the application should be directed to the Technology Center.

The application is being forwarded to the Technology Center Art Unit 3772 for action on the merits commensurate with this decision.

/Terri Johnson/
Terri Johnson
Petitions Examiner
Office of Petitions

UNITED STATES PATENT AND TRADEMARK OFFICE

UNITED STATES DEPARTMENT OF COMMERCE
United States Patent and Trademark Office
Address: COMMISSIONER FOR PATENTS
P.O. Box 1450
Alexandria, Virginia 22313-1450
www.uspto.gov

APPLICATION NO.	FILING DATE	FIRST NAMED INVENTOR	ATTORNEY DOCKET NO.	CONFIRMATION NO.
13/178,574	07/08/2011	Kent Weisenberg	KW-07DIV	8688

26328 7590 08/16/2011
LAW OFFICE OF DAVID MCEWING
P.O. BOX 70410
HOUSTON, TX 77270

EXAMINER	
ART UNIT	PAPER NUMBER
1717	

MAIL DATE	DELIVERY MODE
08/16/2011	PAPER

Please find below and/or attached an Office communication concerning this application or proceeding.

The time period for reply, if any, is set in the attached communication.

UNITED STATES PATENT AND TRADEMARK OFFICE

Commissioner for Patents
United States Patent and Trademark Office
P.O. Box 1450
Alexandria, VA 22313-1450
www.uspto.gov

AUG 16 2011 CST

In re application of
Kent Weisenberg et al
Serial No. 13/178,574
Filed: July 8, 2011
For: IMPARTED CHARGE IN SITU PIPELINING DEVICE

DECISION ON PETITION TO MAKE SPECIAL

This is a decision on the petition filed on July 8, 2011 to make the above-identified application special under the accelerated examination program.

The petition to make the application special is **GRANTED.**

The application is eligible for accelerated examination and the petition complies with the conditions for granting the application special status pursuant to the "Change to Practice for Petitions in Patent Applications to Make Special and for Accelerated Examination" published June 26, 2006, in the Federal Register. (71 Fed. Reg. 36323).

The prosecution of the instant application will be conducted expeditiously according to the following guidelines.

1. The application will be docketed to an examiner and taken up for action within two weeks of the date of this decision.

2. Restriction Practice:
If the examiner determines that the claims are not directed to a single invention, a telephone request to elect one single invention will be made pursuant to MPEP 812.01. As a prerequisite to the grant of this petition, the applicant has agreed to make an oral election, by telephone, without traverse. If the applicant refuses to make an election without traverse, or the examiner cannot reach the applicant after a reasonable effort, the examiner will treat the first claimed invention (invention defined by claim 1) as having being constructively elected without traverse for examination.

3. Office action:
   If it is determined that, after appropriate consultation, there is a potential rejection or any other issue to be addressed, the examiner will telephone the applicant and arrange an interview to discuss and resolve the issue. An Office action, other than a Notice of Allowance and Fee(s) Due (Notice of Allowance), will not be issued unless either: 1) an interview was conducted but did not result in agreed to action that places the application in condition for allowance, or, 2) a determination is made that an interview would be unlikely to result in the application being placed in condition for allowance, and 3) an internal conference has been held to review any rejection of any claim.

4. Time for Reply:
   An Office action other than a Notice of Allowance or a final Office action will set a shortened statutory period of one month or thirty days, whichever is longer, for reply with no extension of time available under 37 CFR 1.136(a). Failure to timely file a reply within this non-extendible period for reply will result in the abandonment of the application.

5. Reply by Applicant:
   A timely reply to an Office action other than the Notice of Allowance must be submitted electronically via EFS or EFS-web and limited to addressing the rejections, objections and requirement made. Any amendment that attempts to: 1) add claims which would result in more than three pending independent claims or more than twenty pending total claims; 2) present claims not encompassed by the pre-examination search or an updated accelerated examination support document; or 3) present claims that are directed a non-elected invention or an invention other than that previously claimed and examined in the application, will be treated as not fully responsive and will not be entered.

   For any amendment to the claims (including any new claim) that is not encompassed by the accelerated examination support document, applicant must provide an updated accelerated examination support document that encompasses the amended or new claims at the time of filing of the amendment.

   To proceed expeditiously with the examination, it is recommended that a reply with amendments made to any claim or with any new claim being added be accompanied by an updated accelerated examination support document or a statement explaining how the amended or new claim is supported by the original accelerated examination support document.

6. Information Disclosure Statement (IDS):
   Any IDS filed during prosecution must be submitted electronically via EFS or EFS-web, accompanied by an updated accelerated examination support document, and be in compliance with 37 CFR 1.97 and 1.98.

7. Post-Allowance Processing:
   To expedite processing of the allowed application into a patent, the applicant must: 1) pay the required fees within one month of the date of the Notice of Allowance, and 2) not file any post allowance papers not required by the Office. In no event may the issue fee be paid and accepted later than three months from the date of the Notice of Allowance.

8. After-Final and Appeal Procedures:
   To expedite prosecution, after receiving the final Office action, applicant must: 1) promptly file a notice of appeal, an appeal brief and appeal fees; and 2) not request a pre-appeal brief conference.

   Any amendment, affidavit or other evidence filed after final Office action must comply with applicable rules and the requirements outlined in numbered paragraphs 5 and 6 above.

   On appeal, the application will proceed according to normal appeal procedures. After appeal, the application will again be treated special.

9. Proceedings Outside the Normal Examination Process:
   If the application becomes involved in a proceeding that is outside the normal examination process (e.g., a secrecy order, national security review, interference proceeding, petitions under 37 CFR 1.181, 182 or 183), the application will be treated special before and after such proceeding.

10. Final Disposition:
    The twelve month goal of this accelerated examination procedure ends with a final disposition. The mailing of a final Office action, a Notice of Allowance, the filing of a Notice of Appeal, or the filing of a Request for Continued Examination (RCE) is the final disposition.

If, during prosecution, a paper is not filed electronically using EFS-web, a reply is filed but is not fully responsive, the application is involved in an appeal, or a proceeding outside normal examination process, the application will still be examined expeditiously, however, the final disposition may occur more than twelve months from the filing of the application.

Any inquiry regarding this decision should be directed to Christine Tierney, Quality Assurance Specialist, at (571) 272-1055.

/Christine Tierney/

Christine Tierney
Quality Assurance Specialist
Technology Center 1700

UNITED STATES PATENT AND TRADEMARK OFFICE

UNITED STATES DEPARTMENT OF COMMERCE
United States Patent and Trademark Office
Address: COMMISSIONER FOR PATENTS
P.O. Box 1450
Alexandria, Virginia 22313-1450
www.uspto.gov

APPLICATION NO.	FILING DATE	FIRST NAMED INVENTOR	ATTORNEY DOCKET NO.	CONFIRMATION NO.
13/178,642	07/08/2011	Christopher J. Dawson	END920090100US2	8802

79980 7590 08/25/2011

Keohane & D'Alessandro
1881 Western Avenue Suite 180
Albany, NY 12203

EXAMINER	
SYED, FARHAN M	

ART UNIT	PAPER NUMBER
2165	

MAIL DATE	DELIVERY MODE
08/25/2011	PAPER

Please find below and/or attached an Office communication concerning this application or proceeding.

The time period for reply, if any, is set in the attached communication.

UNITED STATES PATENT AND TRADEMARK OFFICE

Commissioner for Patents
United States Patent and Trademark Office
P.O. Box 1450
Alexandria, VA 22313-1450
www.uspto.gov

Darrell L. Pogue
Keohane & D'Alessandro PLLC
1881 Western Ave, Suite 180
Albany, NY 12203

In re Application of:
Christopher J. DAWSON et al.
Serial No.: 13/178,642
Filed: July 08, 2011
Title: A SYSTEM AND METHOD TO PROVIDE DYNAMIC ACCESS CONTROL FOR DOCUMENT COMMUNICATION WITHIN A NETWORKED COMPUTING ENVIRONMENT

DECISION ON PETITION TO MAKE SPECIAL FOR NEW APPLICATION UNDER 37 C.F.R. § 1.102 & M.P.E.P. § 708.02

This is a decision on the petition filed on July 08, 2011 to make the above-identified application special for accelerated examination procedure under 37 C.F.R. § 1.102(d).

The petition to make the application special is **DISMISSED**.

REGULATION AND PRACTICE

A grantable petition to make special under 37 C.F.R. § 1.102(d) and pursuant to the "Change to Practice for Petitions in Patent Applications to Make Special and for Accelerated Examination" published in the Federal Register on June 26, 2006 (71 Fed. Reg. 36323), must satisfy the following conditions:

I. Conditions Regarding the Application:

1. the application must be a non-reissue utility or design application filed under 37 CFR 1.111(a);

2. the application, the petition and the required fees must be filed electronically using the USPTO's electronic filing system (EFS), or EFS-web; if not filed electronically, a statement asserting that EFS and EFS-web were not available during the normal business hours.

3. at the time of filing, the application must be complete under 37 CFR 1.51 and in condition for examination;

4. the application must contain three or fewer independent claims and twenty or fewer total claims and the claims must be directed to a single invention.

II. Conditions Regarding the Petition:

The petition must:

1. be filed with the application;

2. include a statement that applicant agrees not to separately argue the patentability of any independent claim during any appeal in the application;

3. include a statement that applicant agrees to make an election without traverse in a telephone interview.

4. include a statement that applicant agrees to conduct such an interview when requested by the examiner.

5. include a statement, made based on a good faith belief, that a preexamination search in compliance with the following requirements, was conducted, including an identification of the filed of search by United States class and subclass, where applicable, and for database searches, the search logic or chemical structure or sequence used as a query, the name of the file(s) searched and the database service, and the date of the search.

The preexamination search must:

5.1 involve U.S. patents and patent application publications, foreign patent documents, and non-patent literature, unless the applicant can justify with reasonable certainty that no references more pertinent than those already identified are likely to be found in the eliminated sources and includes such a justification with this statement;

5.2. be directed to the claimed invention and encompass all of the features of the claims, giving the claims the broadest reasonable interpretation;

5.3. encompass the disclosed features that may be claimed.

6. must provide in support of the petition an accelerated examination support document. An accelerated examination support document must include:

6.1. an information disclosure statement (IDS) in compliance with 37 CFR 1.98 citing each reference deemed most closely related to the subject matter of each of the claims;

6.2. an identification of all the limitations in the claims that are disclosed by the reference specifying where the limitation is disclosed in the cited reference;

6.3. a detailed explanation of how each of the claims is patentable over the references cited with particularity required by 37 CFR 1.111(b) and (c);

6.4. a concise statement of the utility of the invention as defined in each of the independent claims (unless the application is a design application);

6.5. a showing of where each limitation of the claims finds support under 35 USC 112, first paragraph, in the written description of the specification. If applicable, the showing must also identify: (1) each means- (or step) plus-function claim element that invokes consideration under 35 USC 112, sixth paragraph; and (2) the structure, material, or acts in the specification that corresponds to each means- (or step) plus-function claim element that invokes consideration under 35 USC 112, sixth paragraph; if the application claims the benefit of one or more applications under title 35, United States Code, the showing must also include where each limitation of the claims finds support under 35 USC 112, first paragraph, in each such application in which such supports exists;

6.6. an identification of any cited references that may be disqualified under 35 USC 103(c).

REVIEW OF FACTS

The conditions I.1 - I.4, II.1 - II.4, II.5.1 - II.5.3, II.6.1 - II.6.4 and II.6.6 above are considered to have been met. However, the petition fails to comply with conditions II.6.5 above. Therefore, the petition fails to meet the required conditions to be accorded special status under the accelerated examination procedure.

Regarding to the requirement of MPEP § 708.02(a)(I.)(I)(5) and item II.6.5 above, the Accelerated Examination Support Document fails to identify each limitation of the claims 2-6, 8-11 and 13-16 finds support under 35 U.S.C. § 112. Thus, clarification and identification of support is required for each claim limitation of claims 2-6, 8-11 and 13-16.

DECISION

For the above-stated reasons, the petition is **dismissed**. The application will therefore be taken up by the examiner for action in its regular turn.

Petitioner is given a single opportunity to perfect the petition. Any request for reconsideration of this decision must be submitted within 1 (one) month or 30 (thirty) days, whichever is longer, (no extension of time under 37 CFR 1.136(a)) from the date of this decision in order to be considered timely. Any request for reconsideration must address the deficiencies indicated above.

Petitioner is reminded that, upon granting of the special status of the application on request for reconsideration, the application will be processed expeditiously. However, due to the dismissal of the instant petition, examination may not be completed within twelve months of the filing date of the application.

Any inquiry concerning this decision should be directed to the undersigned whose telephone number is (571) 272-3613.

/ VINCENT N. TRANS /

Vincent N. Trans, SPRE/QAS
Technology Center 2100
Computer Architecture and Software

UNITED STATES PATENT AND TRADEMARK OFFICE

UNITED STATES DEPARTMENT OF COMMERCE
United States Patent and Trademark Office
Address: COMMISSIONER FOR PATENTS
P.O. Box 1450
Alexandria, Virginia 22313-1450
www.uspto.gov

APPLICATION NO.	FILING DATE	FIRST NAMED INVENTOR	ATTORNEY DOCKET NO.	CONFIRMATION NO.
13/178,642	07/08/2011	Christopher J. Dawson	END920090100US2	8802

79980 7590 10/14/2011

Keohane & D'Alessandro
1881 Western Avenue Suite 180
Albany, NY 12203

EXAMINER	
SYED, FARHAN M	

ART UNIT	PAPER NUMBER
2165	

MAIL DATE	DELIVERY MODE
10/14/2011	PAPER

Please find below and/or attached an Office communication concerning this application or proceeding.

The time period for reply, if any, is set in the attached communication.

UNITED STATES PATENT AND TRADEMARK OFFICE

Commissioner for Patents
United States Patent and Trademark Office
P.O. Box 1450
Alexandria, VA 22313-1450
www.uspto.gov

Darrell L. Pogue
Keohane & D'Alessandro PLLC
1881 Western Ave, Suite 180
Albany, NY 12203

In re Application of:
Christopher J. DAWSON et al.
Serial No.: 13/178,642
Filed: July 08, 2011
Title: A SYSTEM AND METHOD TO PROVIDE DYNAMIC ACCESS CONTROL FOR DOCUMENT COMMUNICATION WITHIN A NETWORKED COMPUTING ENVIRONMENT

DECISION ON PETITION TO MAKE SPECIAL FOR NEW APPLICATION UNDER 37 C.F.R. § 1.102 & M.P.E.P. § 708.02

This is a decision on the renewed petition filed on September 26, 2011 to make the above-identified application special for accelerated examination procedure under 37 C.F.R. § 1.102(d).

The petition to make the application special is **GRANTED**.

The application is eligible for accelerated examination and the petition complies with the conditions for granting the application special status pursuant to the "Change to Practice for Petitions in Patent Applications to Make Special and for Accelerated Examination" published June 26, 2006, in the Federal Register. (71 Fed. Reg. 36323).

The prosecution of the instant application will be conducted expeditiously according to the following guidelines.

1. The application will be docketed to an examiner and taken up for action within two weeks of the date of this decision.

2. Restriction Practice:
   If the examiner determines that the claims are not directed to a single invention, a telephone request to elect one single invention will be made pursuant to MPEP 812.01. As a prerequisite to the grant of this petition, the applicant has agreed to make an oral election, by telephone, without traverse. If the applicant refuses to make an election without traverse, or the examiner cannot reach the applicant after a reasonable effort, the

examiner will treat the first claimed invention (invention defined by claim 1) as having being constructively elected without traverse for examination.

3. Office action:
If it is determined that, after appropriate consultation, there is a potential rejection or any other issue to be addressed, the examiner will telephone the applicant and arrange an interview to discuss and resolve the issue. An Office action, other than a Notice of Allowance and Fee(s) Due (Notice of Allowance), will not be issued unless either: 1) an interview was conducted but did not result in agreed to action that places the application in condition for allowance, or, 2) a determination is made that an interview would be unlikely to result in the application being placed in condition for allowance, and 3) an internal conference has been held to review any rejection of any claim.

4. Time for Reply:
An Office action other than a Notice of Allowance or a final Office action will set a shortened statutory period of one month or thirty days, whichever is longer, for reply with no extension of time available under 37 CFR 1.136(a). Failure to timely file a reply within this non-extendible period for reply will result in the abandonment of the application.

5. Reply by Applicant:
A timely reply to an Office action other than the Notice of Allowance must be submitted electronically via EFS or EFS-web and limited to addressing the rejections, objections and requirement made. Any amendment that attempts to: 1) add claims which would result in more than three pending independent claims or more than twenty pending total claims; 2) present claims not encompassed by the pre-examination search or an updated accelerated examination support document; or 3) present claims that are directed a non-elected invention or an invention other than that previously claimed and examined in the application, will be treated as not fully responsive and will not be entered.

   For any amendment to the claims (including any new claim) that is not encompassed by the accelerated examination support document, applicant must provide an updated accelerated examination support document that encompasses the amended or new claims at the time of filing of the amendment.

   To proceed expeditiously with the examination, it is recommended that a reply with amendments made to any claim or with any new claim being added be accompanied by an updated accelerated examination support document or a statement explaining how the amended or new claim is supported by the original accelerated examination support document.

6. Information Disclosure Statement (IDS):
Any IDS filed during prosecution must be submitted electronically via EFS or EFS-web, accompanied by an updated accelerated examination support document, and be in compliance with 37 CFR 1.97 and 1.98.

7. Post-Allowance Processing:
   To expedite processing of the allowed application into a patent, the applicant must: 1) pay the required fees within one month of the date of the Notice of Allowance, and 2) not file any post allowance papers not required by the Office. In no event may the issue fee be paid and accepted later than three months from the date of the Notice of Allowance.

8. After-Final and Appeal Procedures:
   To expedite prosecution, after receiving the final Office action, applicant must: 1) promptly file a notice of appeal, an appeal brief and appeal fees; and 2) not request a pre-appeal brief conference.

   Any amendment, affidavit or other evidence filed after final Office action must comply with applicable rules and the requirements outlined in numbered paragraphs 5 and 6 above.

   On appeal, the application will proceed according to normal appeal procedures. After appeal, the application will again be treated special.

9. Proceedings Outside the Normal Examination Process:
   If the application becomes involved in a proceeding that is outside the normal examination process (e.g., a secrecy order, national security review, interference proceeding, petitions under 37 CFR 1.181, 182 or 183), the application will be treated special before and after such proceeding.

10. Final Disposition:
    The twelve month goal of this accelerated examination procedure ends with a final disposition. The mailing of a final Office action, a Notice of Allowance, the filing of a Notice of Appeal, or the filing of a Request for Continued Examination (RCE) is the final disposition.

If, during prosecution, a paper is not filed electronically using EFS-web, a reply is filed but is not fully responsive, the application is involved in an appeal, or a proceeding outside normal examination process, the application will still be examined expeditiously, however, the final disposition may occur more than twelve months from the filing of the application.

Any inquiry concerning this decision should be directed to the undersigned whose telephone number is (571) 272-3613.

/Vincent N. Trans/
Vincent N. Trans, SPRE/QAS
Technology Center 2100
Computer Architecture and Software

Doc Code: PET.GREEN
Document Description: Petition for Green Tech Pilot

PTO/SB/420 (11-10)
Approved for use through 01/31/2011. OMB 0651-0062
U.S. Patent and Trademark Office; U. S. DEPARTMENT OF COMMERCE
Under the Paperwork Reduction Act of 1995, no persons are required to respond to a collection of information unless it displays a valid OMB control number.

PETITION TO MAKE SPECIAL UNDER THE GREEN TECHNOLOGY PILOT PROGRAM

Attorney Docket Number: FMC2497PUSP1(83199699	Application Number (if known): 13178645	Filing date: 8 July 2011
First Named Inventor: Bala S. Chander		
Title: Plug-In Vehicle		

APPLICANT HEREBY REQUESTS TO PARTICIPATE IN THE GREEN TECHNOLOGY PILOT PROGRAM FOR THE ABOVE-IDENTIFIED APPLICATION. See Instruction Sheet on page 2.

This petition must be timely filed electronically using the USPTO electronic filing system, EFS-Web.

1. By filing this petition:

   Applicant is requesting early publication: Applicant hereby requests early publication under 37 CFR 1.219 and the publication fee set forth in 37 CFR 1.18(d) accompanies this request.

2. By filing this petition: applicant is agreeing to make an election without traverse in a telephonic interview and elect an invention that meets the eligibility requirements for the Green Technology Pilot Program, if the Office determines that the claims are not obviously directed to a single invention. See Instruction Sheet.

3. This request is accompanied by statements of special status for the eligibility requirement.

4. The application contains no more than three (3) independent claims and twenty (20) total claims.

5. The application does not contain any multiple dependent claims.

6. Other attachments: _____

Signature /Marc F. Malooley/	Date 25 July 2011
Name (Print/Typed) Marc F. Malooley	Registration Number 50624

Note: *Signatures of all the inventors or assignees of record of the entire interest or their representative(s) are required in accordance with 37 CFR 1.33 and 11.18. Please see 37 CFR 1.4(d) for the form of the signature. If necessary, submit multiple forms for more than one signature see below*.*

☒ *Total of 1 forms are submitted.

The information is required to obtain or retain a benefit by the public which is to file (and by the USPTO to process) an application. Confidentiality is governed by 35 U.S.C. 122 and 37 CFR 1.11 and 1.14. This collection is estimated to take 12 hours to complete, including gathering, preparing, and submitting the completed application form to the USPTO. Time will vary depending upon the individual case. Any comments on the amount of time you require to complete this form and/or suggestions for reducing this burden, should be sent to the Chief Information Officer, U.S. Patent and Trademark Office, U.S. Department of Commerce, P.O. Box 1450, Alexandria, VA 22313-1450. DO NOT SEND FEES OR COMPLETED FORMS TO THIS ADDRESS. **SEND TO: Commissioner for Patents, P.O. Box 1450, Alexandria, VA 22313-1450.**

If you need assistance in completing the form, call 1-800-PTO-9199 and select option 2.

PTO/SB/420 (11-10)
Approved for use through 01/31/2011. OMB 0651-0062
U.S. Patent and Trademark Office; U. S. DEPARTMENT OF COMMERCE
Under the Paperwork Reduction Act of 1995, no persons are required to respond to a collection of information unless it displays a valid OMB control number.

Instruction Sheet for Petition to Make Special Under the Green Technology Pilot Program

(Not to be Submitted to the USPTO)

The following is a summary of the requirements (for more information see the notices (i) "Pilot Program for Green Technologies Including Greenhouse Gas Reduction," (ii) "Elimination of Classification Requirement in the Green Technology Pilot Program," and (iii) "Expansion and Extension of the Green Technology Pilot Program," available on the USPTO web site at http://www.uspto.gov/patents/init_events/green_tech.jsp):

1) The application must be a non-reissue, non-provisional utility application filed under 35 U.S.C. 111 (a), or an international application that has entered the national stage in compliance with 35 U.S.C. 371, irrespective of the filing date of the application. Reexamination proceedings are excluded from this pilot program.

2) The application must contain three or fewer independent claims and twenty or fewer total claims. The application must not contain any multiple dependent claims. For an application that contains more than three independent claims or twenty total claims, or multiple dependent claims, applicant must file a preliminary amendment in compliance with 37 CFR 1.121 to cancel the excess claims and/or the multiple dependent claims at the time the petition to make special is filed.

3) The claims must be directed to a single invention that materially enhances the quality of the environment, or that materially contributes to: (1) the discovery or development of renewable energy resources; (2) the more efficient utilization and conservation of energy resources; or (3) green house gas emission reduction (see the eligibility requirements of sections II and III of the notice (i) cited above). The petition must include a statement that, if the USPTO determines that the claims are directed to multiple inventions (e.g., in a restriction requirement), applicant will agree to make an election without traverse in a telephonic interview, and elect an invention that meets the eligibility requirements in section II or III of the notice (i) cited above.

4) The petition to make special must be timely filed electronically using the USPTO electronic filing system, EFS-Web, and selecting the document description of "Petition for Green Tech Pilot" on the EFS-Web screen. Applicant should use form PTO/SB/420, which is available as a Portable Document Format (PDF) fillable form in EFS-Web and on the USPTO Web site.

5) The petition to make special must be filed at least one day prior to the date that a first Office action (which may be an Office action containing only a restriction requirement) appears in the Patent Application Information Retrieval (PAIR) system. Applicant may check the status of the application using PAIR.

6) The petition to make special must be accompanied by a request for early publication in compliance with 37 CFR 1.219 and the publication fee set forth in 37 CFR 1.18(d).

Privacy Act Statement

The **Privacy Act of 1974 (P.L. 93-579)** requires that you be given certain information in connection with your submission of the attached form related to a patent application or patent. Accordingly, pursuant to the requirements of the Act, please be advised that: (1) the general authority for the collection of this information is 35 U.S.C. 2(b)(2); (2) furnishing of the information solicited is voluntary; and (3) the principal purpose for which the information is used by the U.S. Patent and Trademark Office is to process and/or examine your submission related to a patent application or patent. If you do not furnish the requested information, the U.S. Patent and Trademark Office may not be able to process and/or examine your submission, which may result in termination of proceedings or abandonment of the application or expiration of the patent.

The information provided by you in this form will be subject to the following routine uses:

1. The information on this form will be treated confidentially to the extent allowed under the Freedom of Information Act (5 U.S.C. 552) and the Privacy Act (5 U.S.C 552a). Records from this system of records may be disclosed to the Department of Justice to determine whether disclosure of these records is required by the Freedom of Information Act.
2. A record from this system of records may be disclosed, as a routine use, in the course of presenting evidence to a court, magistrate, or administrative tribunal, including disclosures to opposing counsel in the course of settlement negotiations.
3. A record in this system of records may be disclosed, as a routine use, to a Member of Congress submitting a request involving an individual, to whom the record pertains, when the individual has requested assistance from the Member with respect to the subject matter of the record.
4. A record in this system of records may be disclosed, as a routine use, to a contractor of the Agency having need for the information in order to perform a contract. Recipients of information shall be required to comply with the requirements of the Privacy Act of 1974, as amended, pursuant to 5 U.S.C. 552a(m).
5. A record related to an International Application filed under the Patent Cooperation Treaty in this system of records may be disclosed, as a routine use, to the International Bureau of the World Intellectual Property Organization, pursuant to the Patent Cooperation Treaty.
6. A record in this system of records may be disclosed, as a routine use, to another federal agency for purposes of National Security review (35 U.S.C. 181) and for review pursuant to the Atomic Energy Act (42 U.S.C. 218(c)).
7. A record from this system of records may be disclosed, as a routine use, to the Administrator, General Services, or his/her designee, during an inspection of records conducted by GSA as part of that agency's responsibility to recommend improvements in records management practices and programs, under authority of 44 U.S.C. 2904 and 2906. Such disclosure shall be made in accordance with the GSA regulations governing inspection of records for this purpose, and any other relevant (*i.e.*, GSA or Commerce) directive. Such disclosure shall not be used to make determinations about individuals.
8. A record from this system of records may be disclosed, as a routine use, to the public after either publication of the application pursuant to 35 U.S.C. 122(b) or issuance of a patent pursuant to 35 U.S.C. 151. Further, a record may be disclosed, subject to the limitations of 37 CFR 1.14, as a routine use, to the public if the record was filed in an application which became abandoned or in which the proceedings were terminated and which application is referenced by either a published application, an application open to public inspection or an issued patent.
9. A record from this system of records may be disclosed, as a routine use, to a Federal, State, or local law enforcement agency, if the USPTO becomes aware of a violation or potential violation of law or regulation.

UNITED STATES PATENT AND TRADEMARK OFFICE

UNITED STATES DEPARTMENT OF COMMERCE
United States Patent and Trademark Office
Address: COMMISSIONER FOR PATENTS
P.O. Box 1450
Alexandria, Virginia 22313-1450
www.uspto.gov

APPLICATION NO.	FILING DATE	FIRST NAMED INVENTOR	ATTORNEY DOCKET NO.	CONFIRMATION NO.
13/178,645	07/08/2011	Bala S. Chander	83199699	8810

28395 7590 08/04/2011
BROOKS KUSHMAN P.C./FGTL
1000 TOWN CENTER
22ND FLOOR
SOUTHFIELD, MI 48075-1238

EXAMINER	
ART UNIT	PAPER NUMBER
2612	

MAIL DATE	DELIVERY MODE
08/04/2011	PAPER

Please find below and/or attached an Office communication concerning this application or proceeding.

The time period for reply, if any, is set in the attached communication.

UNITED STATES PATENT AND TRADEMARK OFFICE

Commissioner for Patents
United States Patent and Trademark Office
P.O. Box 1450
Alexandria, VA 22313-1450
www.uspto.gov

BROOKS KUSHMAN P.C./FGTL
1000 TOWN CENTER
22ND FLOOR
SOUTHFIELD MI 48075-1238

In re Application of	:	
CHANDER et al.	:	DECISION ON PETITION
Application No. 13/178,645	:	TO MAKE SPECIAL UNDER
Filed: July 08, 2011	:	THE GREEN TECHNOLOGY
Attorney Docket No. 83199699	:	PILOT PROGRAM

This is a decision on the petition under 37 CFR 1.102, filed on July 26, 2011, to make the above-identified application special under the pilot program for applications pertaining to Green Technologies as set forth 74 Federal Register Notice 64666 (December 8, 2009) and amended by 75 Federal Register Notice 28554 (May 21, 2010) and 75 Federal Register Notice 69049 (November 10, 2010).

The petition is **GRANTED**.

A grantable petition to make an application special under 37 CFR 1.102 and the pilot program as set forth in 74 FR 64666 must be directed to a nonprovisional application filed under 35 USC 111(a) or be a national stage entry under 35 USC 371, exclusive of any reissue applications.

In order to qualify for special status, the following requirements must be met. 1) The application must have no more than 3 independent claims and no more than 20 total claims. 2) The application must not contain any multiple dependent claims. 3) The petition must state the basis for seeking special status, i.e., the claimed invention either: A) materially enhances the quality of the environment or B) materially contributes to: i) the discovery or development of renewable energy resources, ii) the more efficient utilization and conservation of energy resources, or iii) greenhouse gas emission reduction. 4) If the disclosure is not clear on its face that the claimed invention materially contributes under category (A) or (B), the petition must be accompanied by a statement by the applicant, assignee, or an attorney/agent registered to practice before the Office explaining how the materiality standard is met. 5) A statement that applicant will agree to make an election without traverse in a telephonic interview if a restriction requirement is made by the examiner. 6) The petition to make special must be filed electronically. 7) The petition must be filed at least one day prior to the date that a first Office Action appears in the Patent Application Information Retrieval (PAIR) system. 8) The petition must be accompanied by a request for early publication in compliance with 37 CFR 1.219 and include the publication fee as set forth in 37 CFR 1.18(d).

The requirement for a fee for consideration of the petition to make special for applications pertaining to Green Technologies has been waived.

The instant petition complies with items 1 – 8 above. Accordingly, the above-identified application has been accorded "special" status.

Telephone inquires concerning this decision should be directed to Lee W. Young at 571-272-4549.

The application is being forwarded to the Technology Center Art Unit 2612 for action on the merits commensurate with this decision.

Lee W. Young
Quality Assurance Specialist
Technology Center 2600

Doc Code: PET.GREEN
Document Description: Petition for Green Tech Pilot

PTO/SB/420 (03-11)

PETITION TO MAKE SPECIAL UNDER THE GREEN TECHNOLOGY PILOT PROGRAM

Attorney Docket Number: 820602-1030	Application Number (if known): 13178683	Filing date: July 8, 2011

First Named Inventor: Fredrick Taylor

Title: HYBRID SYSTEM AND PROCESS FOR CONVERTING WHOLE TIRES AND OTHER SOLID CARBON MATERIALS INTO RECLAIMABLE AND REUSABLE COMPONENTS

APPLICANT HEREBY REQUESTS TO PARTICIPATE IN THE GREEN TECHNOLOGY PILOT PROGRAM FOR THE ABOVE-IDENTIFIED APPLICATION. See Instruction Sheet on page 2.

This petition must be timely filed electronically using the USPTO electronic filing system, EFS-Web.

1. By filing this petition:

   Applicant is requesting early publication: Applicant hereby requests early publication under 37 CFR 1.219 and the publication fee set forth in 37 CFR 1.18(d) accompanies this request.

2. By filing this petition: applicant is agreeing to make an election without traverse in a telephonic interview and elect an invention that meets the eligibility requirements for the Green Technology Pilot Program, if the Office determines that the claims are not obviously directed to a single invention. See Instruction Sheet.

3. This request is accompanied by statements of special status for the eligibility requirement.

4. The application contains no more than three (3) independent claims and twenty (20) total claims.

5. The application does not contain any multiple dependent claims.

6. Other attachments: Preliminary Amendment, and Statements of Special Status

Signature /Todd Deveau/	Date January 18, 2012
Name (Print/Typed) Todd Deveau	Registration Number 29,526

Note: *Signatures of all the inventors or assignees of record of the entire interest or their representative(s) are required in accordance with 37 CFR 1.33 and 11.18. Please see 37 CFR 1.4(d) for the form of the signature. If necessary, submit multiple forms for more than one signature, see below*.*

☐ *Total of _____ forms are submitted.

If you need assistance in completing the form, call 1-800-PTO-9199 and select option 2.

Instruction Sheet for
Petition to Make Special Under the Green Technology Pilot Program

(Not to be Submitted to the USPTO)

The following is a summary of the requirements (for more information see the notices (i) "Pilot Program for Green Technologies Including Greenhouse Gas Reduction," (ii) "Elimination of Classification Requirement in the Green Technology Pilot Program," and (iii) "Expansion and Extension of the Green Technology Pilot Program," available on the USPTO web site at http://www.uspto.gov/patents/init_events/green_tech.jsp):

(1) The application must be a non-reissue, non-provisional utility application filed under 35 U.S.C. 111(a), or an international application that has entered the national stage in compliance with 35 U.S.C. 371, irrespective of the filing date of the application. Reexamination proceedings are excluded from this pilot program.

(2) The application must contain three or fewer independent claims and twenty or fewer total claims. The application must not contain any multiple dependent claims. For an application that contains more than three independent claims or twenty total claims, or multiple dependent claims, applicant must file a preliminary amendment in compliance with 37 CFR 1.121 to cancel the excess claims and/or the multiple dependent claims at the time the petition to make special is filed.

(3) The claims must be directed to a single invention that materially enhances the quality of the environment, or that materially contributes to: (1) the discovery or development of renewable energy resources; (2) the more efficient utilization and conservation of energy resources; or (3) green house gas emission reduction (see the eligibility requirements of sections II and III of the notice (i) cited above). The petition must include a statement that, if the USPTO determines that the claims are directed to multiple inventions (e.g., in a restriction requirement), applicant will agree to make an election without traverse in a telephonic interview, and elect an invention that meets the eligibility requirements in section II or III of the notice (i) cited above.

(4) The petition to make special must be timely filed electronically using the USPTO electronic filing system, EFS-Web, and selecting the document description of "Petition for Green Tech Pilot" on the EFS-Web screen. Applicant should use form PTO/SB/420, which is available as a Portable Document Format (PDF) fillable form in EFS-Web and on the USPTO Web site.

(5) The petition to make special must be filed at least one day prior to the date that a first Office action (which may be an Office action containing only a restriction requirement) appears in the Patent Application Information Retrieval (PAIR) system. Applicant may check the status of the application using PAIR.

(6) The petition to make special must be accompanied by a request for early publication in compliance with 37 CFR 1.219 and the publication fee set forth in 37 CFR 1.18(d).

Privacy Act Statement

The **Privacy Act of 1974 (P.L. 93-579)** requires that you be given certain information in connection with your submission of the attached form related to a patent application or patent. Accordingly, pursuant to the requirements of the Act, please be advised that: (1) the general authority for the collection of this information is 35 U.S.C. 2(b)(2); (2) furnishing of the information solicited is voluntary; and (3) the principal purpose for which the information is used by the U.S. Patent and Trademark Office is to process and/or examine your submission related to a patent application or patent. If you do not furnish the requested information, the U.S. Patent and Trademark Office may not be able to process and/or examine your submission, which may result in termination of proceedings or abandonment of the application or expiration of the patent.

The information provided by you in this form will be subject to the following routine uses:

1. The information on this form will be treated confidentially to the extent allowed under the Freedom of Information Act (5 U.S.C. 552) and the Privacy Act (5 U.S.C 552a). Records from this system of records may be disclosed to the Department of Justice to determine whether disclosure of these records is required by the Freedom of Information Act.
2. A record from this system of records may be disclosed, as a routine use, in the course of presenting evidence to a court, magistrate, or administrative tribunal, including disclosures to opposing counsel in the course of settlement negotiations.
3. A record in this system of records may be disclosed, as a routine use, to a Member of Congress submitting a request involving an individual, to whom the record pertains, when the individual has requested assistance from the Member with respect to the subject matter of the record.
4. A record in this system of records may be disclosed, as a routine use, to a contractor of the Agency having need for the information in order to perform a contract. Recipients of information shall be required to comply with the requirements of the Privacy Act of 1974, as amended, pursuant to 5 U.S.C. 552a(m).
5. A record related to an International Application filed under the Patent Cooperation Treaty in this system of records may be disclosed, as a routine use, to the International Bureau of the World Intellectual Property Organization, pursuant to the Patent Cooperation Treaty.
6. A record in this system of records may be disclosed, as a routine use, to another federal agency for purposes of National Security review (35 U.S.C. 181) and for review pursuant to the Atomic Energy Act (42 U.S.C. 218(c)).
7. A record from this system of records may be disclosed, as a routine use, to the Administrator, General Services, or his/her designee, during an inspection of records conducted by GSA as part of that agency's responsibility to recommend improvements in records management practices and programs, under authority of 44 U.S.C. 2904 and 2906. Such disclosure shall be made in accordance with the GSA regulations governing inspection of records for this purpose, and any other relevant (*i.e.*, GSA or Commerce) directive. Such disclosure shall not be used to make determinations about individuals.
8. A record from this system of records may be disclosed, as a routine use, to the public after either publication of the application pursuant to 35 U.S.C. 122(b) or issuance of a patent pursuant to 35 U.S.C. 151. Further, a record may be disclosed, subject to the limitations of 37 CFR 1.14, as a routine use, to the public if the record was filed in an application which became abandoned or in which the proceedings were terminated and which application is referenced by either a published application, an application open to public inspection or an issued patent.
9. A record from this system of records may be disclosed, as a routine use, to a Federal, State, or local law enforcement agency, if the USPTO becomes aware of a violation or potential violation of law or regulation.

IN THE UNITED STATES PATENT AND TRADEMARK OFFICE

Applicant:	Fredrick Taylor	Group Art Unit:	1736
Serial No.:	13/178,683	Docket No.:	820602-1030
Filed:	July 8, 2011	Confirmation No.:	8887
Title:	HYBRID SYSTEM AND PROCESS FOR CONVERTING WHOLE TIRES AND OTHER SOLID CARBON MATERIALS INTO RECLAIMABLE AND REUSABLE COMPONENTS		

STATEMENTS OF SPECIAL STATUS IN SUPPORT OF PETITION TO MAKE SPECIAL UNDER THE GREEN TECHNOLOGY PILOT PROGRAM

Commissioner for Patents
P O Box 1450
Alexandria, VA 22313-1450

Sir:

Applicant submits the following statements of special status in support of its Petition to Make Special Under the Green Technology Pilot Program, namely:

(1) This application is a non-provisional application filed under 35 U.S.C. § 111(a);

(2) In accordance with the Preliminary Amendment concurrently filed herewith, this application contains three or fewer independent claims and twenty or fewer total claims and does not include any multiple dependent claims; and

(3) This application is directed to a single invention that materially enhances the quality of the environment, or that materially contributes to: (a) the discovery or development of renewable energy resources; (b) the more efficient utilization and conservation of energy resources; or (c) green house gas emission reduction

Respectfully submitted,

THOMAS, KAYDEN, HORSTEMEYER & RISLEY, L.L.P.

By: /Todd Deveau/
Todd Deveau

400 Interstate North Parkway
Suite 1500
Atlanta, Georgia 30339
770-933-9500

UNITED STATES PATENT AND TRADEMARK OFFICE

UNITED STATES DEPARTMENT OF COMMERCE
United States Patent and Trademark Office
Address: COMMISSIONER FOR PATENTS
P.O. Box 1450
Alexandria, Virginia 22313-1450
www.uspto.gov

APPLICATION NO.	FILING DATE	FIRST NAMED INVENTOR	ATTORNEY DOCKET NO.	CONFIRMATION NO.
13/178,683	07/08/2011	Fredrick Taylor	820602-1030	8887

24504 7590 02/02/2012

THOMAS, KAYDEN, HORSTEMEYER & RISLEY, LLP
400 INTERSTATE NORTH PARKWAY SE
SUITE 1500
ATLANTA, GA 30339

EXAMINER	
ART UNIT	PAPER NUMBER
1771	

NOTIFICATION DATE	DELIVERY MODE
02/02/2012	ELECTRONIC

Please find below and/or attached an Office communication concerning this application or proceeding.

The time period for reply, if any, is set in the attached communication.

Notice of the Office communication was sent electronically on above-indicated "Notification Date" to the following e-mail address(es):

uspatents@tkhr.com
kristen.layton@tkhr.com
ozzie.liggins@tkhr.com

UNITED STATES PATENT AND TRADEMARK OFFICE

Commissioner for Patents
United States Patent and Trademark Office
P.O. Box 1450
Alexandria, VA 22313-1450
www.uspto.gov

2/2/12

THOMAS, KAYDEN, HORSTEMEYER & RISLEY, LLP
400 INTERSTATE NORTH PARKWAY SE
SUITE 1500
ATLANTA GA 30339

In re Application of	:	
Taylor	:	DECISION ON PETITION
Application No. 13/178,683	:	TO MAKE SPECIAL UNDER
Filed: 7/8/2011	:	THE GREEN TECHNOLOGY
Attorney Docket No. **820602-1030**	:	PILOT PROGRAM

This is a decision on the petition under 37 CFR 1.102, filed 1/18/2012, to make the above-identified application special under the pilot program for applications pertaining to Green Technologies as set forth in 74 Federal Register Notice 64666 (December 8, 2009) and amended by 75 Federal Register Notice 28554 (May 21, 2010) and 75 Federal Register Notice 69049 (November 10, 2010).

The petition is **GRANTED**.

A grantable petition to make an application special under 37 CFR 1.102 and the pilot program as set forth in 74 FR 64666 must be directed to a nonprovisional application filed under 35 USC 111(a) or be a national stage entry under 35 USC 371, exclusive of any reissue applications.

In order to qualify for special status, the following requirements must be met. 1) The application must have no more than 3 independent claims and no more than 20 total claims. 2) The application must not contain any multiple dependent claims. 3) The petition must state the basis for seeking special status, i.e., the claimed invention either: A) materially enhances the quality of the environment or B) materially contributes to: i) the discovery or development of renewable energy resources, ii) the more efficient utilization and conservation of energy resources, or iii) greenhouse gas emission reduction. 4) If the disclosure is not clear on its face that the claimed invention materially contributes under category (A) or (B), the petition must be accompanied by a statement by the applicant, assignee, or an attorney/agent registered to practice before the Office explaining how the materiality standard is met. 5) A statement that applicant will agree to make an election without traverse in a telephonic interview if a restriction requirement is made by the examiner. 6) The petition to make special must be filed electronically. 7) The petition must be filed at least one day prior to the date that a first Office Action appears in the Patent Application Information Retrieval (PAIR) system. 8) The petition must be accompanied by a

request for early publication in compliance with 37 CFR 1.219 and include the publication fee as set forth in 37 CFR 1.18(d).

The requirement for a fee for consideration of the petition to make special for applications pertaining to Green Technologies has been waived.

The instant petition complies with items 1 – 8 above. Accordingly, the above-identified application has been accorded "special" status.

Telephone inquires concerning this decision should be directed to Tom Dunn at 571-272-1171.

The application is being forwarded to the Technology Center Art Unit 1771 for action on the merits commensurate with this decision.

/Tom Dunn/

Tom Dunn
Quality Assurance Specialist
Technology Center 1700

UNITED STATES PATENT AND TRADEMARK OFFICE

Commissioner for Patents
United States Patent and Trademark Office
P.O. Box 1450
Alexandria, VA 22313-1450
www.uspto.gov

PATENT DOCKET DEPARTMENT
ARMSTRONG TEASDALE LLP
7700 FORSYTH BOULEVARD
SUITE 1800
ST. LOUIS MO 63105

MAILED
MAR 12 2012
OFFICE OF PETITIONS

Applicant: Robert M. Herrin
Appl. No.: 13/178,720
Filing Date: July 8, 2011
Title: APPARATUS AND METHOD FOR FORMING A CONTAINER HAVING AN ENHANCED CORNER SUPPORT STRUCTURE
Attorney Docket: 31369-796
Pub. No.: US 20110269609 A1
Pub. Date: November 3, 2011

This is a decision on the request for a corrected patent application publication under 37 CFR 1.221(b), received on January 3, 2012, for the above-identified application.

The request is DISMISSED.

Applicant requests that the application be republished because the patent application publication contains an error in the specification and claims.

37 CFR 1.221 (b) is applicable "only when the Office makes a material mistake which is apparent from Office records.... Any request for a corrected publication or revised patent application publication other than provided as provided in paragraph (a) of this section must be filed within two months from the date of the patent application publication. This period is not extendable." A material mistake must affect the public's ability to appreciate the technical disclosure of the patent application publication, to determine the scope of the patent application publication, or to determine the scope of the provisional rights that an applicant may seek to enforce upon issuance of a patent. [1]

The error noted by requestor in the specification and claims may be an Office mistake, but it is not a material Office error under 37 CFR 1.221(b). The mistake is a minor typographical error and it does not affect the public's ability to appreciate the technical disclosure of the patent application publication, or determine the scope of the patent application publication or determine the scope of the provisional rights that an applicant may seek to enforce upon issuance of a patent. See MPEP 1130B.

---

[1] Changes to Implement Eighteen-Month Publication of Patent Applications, 65 FR 57023, 57038 (Sept. 20, 2000), 1239, Off. Gaz. Pat. Office Notices 63, 75 (Oct. 10, 2000) (final rule).

The applicant is advised that a "request for republication of an application previously published" may be filed under 37 CFR 1.221 (a). Such a request for republication "must include a copy of the application compliance with the Office's electronic filing system requirements and be accompanied by the publication fee set forth in § 1.18 (d) and the processing fee set forth in § 1.17 (i)." If the request for republication does not comply with the electronic filing system requirements, the republication will not take place and the publication fee set forth in § 1.18 (d) will be refunded. The processing fee will be retained.

A guide for filing a request for a Pre-Grant Publication, such as a request for republication, may be found on the link below:

http://www.uspto.gov/patents/process/file/efs/guidance/index.jsp

http://www.uspto.gov/ebc/portal/efs/pgpub_quickstart.pdf

Any request for republication under 37 CFR 1.221(a), must be submitted via the EFS system, as a "Pre-Grant Publication".

Inquiries relating to this matter may be directed to Karen Creasy at (571) 272-3208.

/Christopher Bottorff/

Christopher Bottorff
Petitions Examiner
Office of Petitions

Doc Code: PET.GREEN
Document Description: Petition for Green Tech Pilot

PTO/SB/420 (03-11)

PETITION TO MAKE SPECIAL UNDER THE GREEN TECHNOLOGY PILOT PROGRAM

Attorney Docket Number: wen725	Application Number (if known): 13178725	Filing date: 08-JUL-2011

First Named Inventor: Ben Wen

Title: Bio-based adhesive material

APPLICANT HEREBY REQUESTS TO PARTICIPATE IN THE GREEN TECHNOLOGY PILOT PROGRAM FOR THE ABOVE-IDENTIFIED APPLICATION. See Instruction Sheet on page 2.

This petition must be timely filed electronically using the USPTO electronic filing system, EFS-Web.

1. By filing this petition:

   Applicant is requesting early publication: Applicant hereby requests early publication under 37 CFR 1.219 and the publication fee set forth in 37 CFR 1.18(d) accompanies this request.

2. By filing this petition: applicant is agreeing to make an election without traverse in a telephonic interview and elect an invention that meets the eligibility requirements for the Green Technology Pilot Program, if the Office determines that the claims are not obviously directed to a single invention. See Instruction Sheet.

3. This request is accompanied by statements of special status for the eligibility requirement.

4. The application contains no more than three (3) independent claims and twenty (20) total claims.

5. The application does not contain any multiple dependent claims.

6. Other attachments: _____

Signature /LOUIS VENTRE JR/	Date 21-OCT-2011
Name (Print/Typed) Louis Ventre, Jr.	Registration Number 46254

Note: *Signatures of all the inventors or assignees of record of the entire interest or their representative(s) are required in accordance with 37 CFR 1.33 and 11.18. Please see 37 CFR 1.4(d) for the form of the signature. If necessary, submit multiple forms for more than one signature, see below*.*

■ *Total of ONE forms are submitted.

If you need assistance in completing the form, call 1-800-PTO-9199 and select option 2.

IN THE UNITED STATES PATENT AND TRADEMARK OFFICE

Application Number: 13178725
Confirmation Number: 8978
Filing Date: 08-JUL-2011
Title of Invention: Bio-based adhesive material
First Named Inventor: Ben Wen
Attorney Docket Number: wen725
Examiner: Not yet assigned
Group Art Unit: 1732

STATEMENT OF SPECIAL STATUS

Petition For The Green Technology Pilot Program

Commissioner for Patents
P.O. Box 1450
Alexandria, VA 22313-1450

Date of Submission: 21-OCT-2011

Sir:

Applicant submits this statement of special status for the eligibility requirement of the Petition for the Green Technology Pilot Program.

Applicant's invention is a bio-based adhesive material that can reduce emission of greenhouse gas emissions and offset the use of petroleum products with renewable bio-derived oils, such as used cooking oil. It can directly displace the use of petroleum oil stocks with renewable energy resources. The invention permits production and use renewable material based polymers to replace petroleum based products for building and paving applications can reduce the use of petroleum and improve petroleum product performance, reduce volatile organic compounds emissions and greenhouse gas emissions.

Applicant requests early publication and submits the requisite $300 publication fee.

Applicant's application contains: three or fewer independent claims, specifically three independent claims, claims 1, 2 and 15; fewer than 20 total claims, specifically 15 claims; and no multiple dependent claims.

The application claims are directed to a single invention that materially enhances the quality of the environment and also that materially contributes to green house gas emission reduction.

If the USPTO determines that the claims in applicant's application are directed to multiple inventions (e.g., in a restriction requirement), applicant agrees to make an election without traverse in a telephonic interview, and elect an invention that meets the eligibility requirements of the program.

This petition is being filed prior to the date of a first Office action.

Conclusions:

This statement is submitted consistent with the requirements for participation in the Green Technology Pilot Program. Applicant believes his application qualifies for such participation.

Therefore, applicant respectfully requests that his application be accorded special status, that a timely Notice of Allowance be issued in this case, and that the application be issued as a United States Patent.

Respectfully submitted,

Signed: 21-OCT-2011 /Louis Ventre Jr/

Louis Ventre, Jr.
Registration No. 46254
Registered Patent Attorney
2483 Oakton Hills Drive
Oakton, VA 22124-1530
USPTO Customer Number 24221
Telephone Number: 703-242-1247
Facsimile Number: 703-783-7800

UNITED STATES PATENT AND TRADEMARK OFFICE

UNITED STATES DEPARTMENT OF COMMERCE
United States Patent and Trademark Office
Address: COMMISSIONER FOR PATENTS
P.O. Box 1450
Alexandria, Virginia 22313-1450
www.uspto.gov

APPLICATION NO.	FILING DATE	FIRST NAMED INVENTOR	ATTORNEY DOCKET NO.	CONFIRMATION NO.
13/178,725	07/08/2011	Ben Wen	wen725	8978

24221 7590 11/09/2011

LOUIS VENTRE, JR
2483 OAKTON HILLS DRIVE
OAKTON, VA 22124-1530

EXAMINER	
ART UNIT	PAPER NUMBER
1732	

NOTIFICATION DATE	DELIVERY MODE
11/09/2011	ELECTRONIC

Please find below and/or attached an Office communication concerning this application or proceeding.

The time period for reply, if any, is set in the attached communication.

Notice of the Office communication was sent electronically on above-indicated "Notification Date" to the following e-mail address(es):

lventre@lventre.com
ventre.louis@verizon.net

UNITED STATES PATENT AND TRADEMARK OFFICE

Commissioner for Patents
United States Patent and Trademark Office
P.O. Box 1450
Alexandria, VA 22313-1450
www.uspto.gov

11/9/11

LOUIS VENTRE, JR
2483 OAKTON HILLS DRIVE
OAKTON VA 22124-1530

In re Application of	:	
Wen et al.	:	DECISION ON PETITION
Application No. 13/178,725	:	TO MAKE SPECIAL UNDER
Filed: 7/8/2011	:	THE GREEN TECHNOLOGY
Attorney Docket No. **wen725**	:	PILOT PROGRAM

This is a decision on the petition under 37 CFR 1.102, filed 10/21/2011, to make the above-identified application special under the pilot program for applications pertaining to Green Technologies as set forth in 74 Federal Register Notice 64666 (December 8, 2009) and amended by 75 Federal Register Notice 28554 (May 21, 2010) and 75 Federal Register Notice 69049 (November 10, 2010).

The petition is **GRANTED**.

A grantable petition to make an application special under 37 CFR 1.102 and the pilot program as set forth in 74 FR 64666 must be directed to a nonprovisional application filed under 35 USC 111(a) or be a national stage entry under 35 USC 371, exclusive of any reissue applications.

In order to qualify for special status, the following requirements must be met. 1) The application must have no more than 3 independent claims and no more than 20 total claims. 2) The application must not contain any multiple dependent claims. 3) The petition must state the basis for seeking special status, i.e., the claimed invention either: A) materially enhances the quality of the environment or B) materially contributes to: i) the discovery or development of renewable energy resources, ii) the more efficient utilization and conservation of energy resources, or iii) greenhouse gas emission reduction. 4) If the disclosure is not clear on its face that the claimed invention materially contributes under category (A) or (B), the petition must be accompanied by a statement by the applicant, assignee, or an attorney/agent registered to practice before the Office explaining how the materiality standard is met. 5) A statement that applicant will agree to make an election without traverse in a telephonic interview if a restriction requirement is made by the examiner. 6) The petition to make special must be filed electronically. 7) The petition must be filed at least one day prior to the date that a first Office Action appears in the Patent Application Information Retrieval (PAIR) system. 8) The petition must be accompanied by a request for early publication in compliance with 37 CFR 1.219 and include the publication fee as set forth in 37 CFR 1.18(d).

The requirement for a fee for consideration of the petition to make special for applications pertaining to Green Technologies has been waived.

The instant petition complies with items 1 – 8 above. Accordingly, the above-identified application has been accorded "special" status.

Telephone inquires concerning this decision should be directed to Tom Dunn at 571-272-1171..

The application is being forwarded to the Technology Center Art Unit 1732 for action on the merits commensurate with this decision.

/Tom Dunn/

Tom Dunn
Quality Assurance Specialist
Technology Center 1700

Doc Code: PET.GREEN
Document Description: Petition for Green Tech Pilot

PTO/SB/420 (03-11)

PETITION TO MAKE SPECIAL UNDER THE GREEN TECHNOLOGY PILOT PROGRAM

Attorney Docket Number: 215672-5	Application Number (if known): 13/178,800	Filing date: 07-08-2011

First Named Inventor: Changyong Wang

Title: ELECTRICAL SYSTEM AND CONTROL METHOD

APPLICANT HEREBY REQUESTS TO PARTICIPATE IN THE GREEN TECHNOLOGY PILOT PROGRAM FOR THE ABOVE-IDENTIFIED APPLICATION. See Instruction Sheet on page 2.

This petition must be timely filed electronically using the USPTO electronic filing system, EFS-Web.

1. By filing this petition:

   Applicant is requesting early publication: Applicant hereby requests early publication under 37 CFR 1.219 and the publication fee set forth in 37 CFR 1.18(d) accompanies this request.

2. By filing this petition: applicant is agreeing to make an election without traverse in a telephonic interview and elect an invention that meets the eligibility requirements for the Green Technology Pilot Program, if the Office determines that the claims are not obviously directed to a single invention. See Instruction Sheet.

3. This request is accompanied by statements of special status for the eligibility requirement.

4. The application contains no more than three (3) independent claims and twenty (20) total claims.

5. The application does not contain any multiple dependent claims.

6. Other attachments: Statement Concerning the Basis for the Special Status

Signature /Allison W. Mages/	Date 11-10-2011
Name (Print/Typed) Allison W. Mages	Registration Number 57,275

Note: Signatures of all the inventors or assignees of record of the entire interest or their representative(s) are required in accordance with 37 CFR 1.33 and 11.18. Please see 37 CFR 1.4(d) for the form of the signature. If necessary, submit multiple forms for more than one signature, see below.*

☐ *Total of _____ forms are submitted.

If you need assistance in completing the form, call 1-800-PTO-9199 and select option 2.

IN THE UNITED STATES PATENT AND TRADEMARK OFFICE

First Named Inventor: Changyong Wang)
Confirmation No.: 9111)
)
Serial No.: 13/178,800)
)
Filing Date: 07-08-2011)
)
Atty Docket No.: 215672-5 (US))

VIA EFS
Commissioner for Patents
P.O. Box 1450
Alexandria, VA 22313-1450

Statement Concerning the Basis for the Special Status

SIR:

The invention relates generally to electrical systems for providing electrical power to utility grids at interconnection points. More specifically, the invention relates to an electrical system which converts electrical power generated by renewable energy sources such as wind turbines and photovoltaic modules into electrical power which meets a low harmonic requirement of the interconnection point. (See [0020])

Recently, renewable energy sources, such as wind turbines, have received increased attention as environmentally safe and relatively inexpensive alternative energy sources. With this growing interest, considerable efforts have been made to develop wind turbines that are reliable and efficient. To maximize the efficacy of power generation and to simplify connection to the utility grid, wind turbines are often located in proximity to one another, which are generally referred to in the pertinent arts as a "wind farm." Wind turbines in the wind farm

generate electrical power and feed electrical current into the utility, such as a power grid, at a point of common connection (PCC). (See [0003])

A type of wind turbine that keeps the rotational generator speed proportional to the wind speed is a variable speed wind turbine. The variable speed wind turbine includes a generator, a converter on the generator side, a DC link Bus, and a converter connected to the grid. The variable frequency energy of the generator is transferred to the DC link bus by the generator side converter and later converted to a fixed frequency by the grid side converter. (See [0004])

The grid side active converter typically utilizes semiconductor switches, such as insulated gate bipolar transistors (IGBTs), to convert DC voltage to AC voltage at the grid frequency by pulse width modulated switching actions of those semiconductor switches. The switching actions tend to create undesirable harmonics. To avoid the problems caused by these harmonics, a number of filters are installed. The filter components are typically bulky and expensive. (See [0005])

There is a need in the art to provide an improved electrical system for a wind farm which can meet the low harmonics requirement at an electrical connection point for a group of wind turbines which differs from conventional systems. Such systems would additionally be useful for other renewable energy sources such as photovoltaic systems, for example. (See [0006])

Embodiments described below generally relate to a power generation system with at least two electrical systems connected in parallel at an electrical connection point such at an electric grid or a substation system of a power

generation system. Each wind turbine electrical system includes a pulse width modulation (PWM) controller for obtaining a fundamental waveform and a carrier signal, and for generating a PWM pattern for a respective grid side converter to use when driving switches of the respective grid side converter. A control system is configured to reduce harmonics at the electrical connection point by interleaving the carrier signals, or fundamental waveforms, or a combination of carrier signals and fundamental waveforms to generate interleaved PWM patterns respectively for the grid side converters of the wind turbine electrical systems. Thus, a combination of the waveforms of the wind turbine electrical systems at the electrical connection point has relatively low harmonics. Accordingly, in one aspect, passive filter designs of the wind turbine electrical systems can be significantly simplified. In another aspect, switches of the grid side converters are allowed to have a relatively low switching frequency, energy losses of the switches are decreased, and power efficiencies of the grid side converters are increased. (See [0024])

In accordance with an embodiment, a power generation system comprises at least two electrical systems connected in parallel at an electrical connection point. Each electrical system comprises a power conversion system comprising a converter including a plurality of switches for converting direct current power into alternating current power. The power generation system comprises a control system including at least two pulse width modulation (PWM) modulators, each PWM modulator for obtaining a fundamental waveform and a carrier signal, using the fundamental and carrier signals to generate a PWM pattern, and for providing

the PWM pattern to a respective converter for driving the switches of the respective converter. The control system is configured to interleave carrier signals, fundamental waveforms, or a combination of carrier signals and fundamental waveforms of the at least two electrical systems to generate interleaved PWM patterns respectively for the at least two converters. ([See 0007])

In accordance with another embodiment, a method of controlling electrical power systems coupled to an electrical connection point is provided. The method comprises obtaining carrier signals and fundamental waveforms; generating pulse width modulation (PWM) signals using the carrier signals and the fundamental waveforms while interleaving carrier signals, fundamental waveforms, or a combination of carrier signals and fundamental waveforms of the electrical power systems; and driving grid side converters of the electrical power systems with the PWM signals. (See [0008])

Therefore, Applicant respectfully submits that Special Status is sought on the basis that the present invention materially contributes to the discovery or development of renewable energy resources or materially contributes to the more efficient utilization and conservation of energy resources.

The undersigned representative may be contacted at the number below to facilitate the resolution of any matters. Please charge any fees that are incurred in connection with this Statement to deposit account no. 09-0470.

Respectfully submitted,

General Electric Company

By : /Allison W. Mages/
Allison W. Mages
Reg. No. 57,275

Dated: November 10, 2011

GE Global Patent Operation
2 Corporate Drive, Suite 648
Shelton, CT 06484
203-944-6730

UNITED STATES PATENT AND TRADEMARK OFFICE

UNITED STATES DEPARTMENT OF COMMERCE
United States Patent and Trademark Office
Address: COMMISSIONER FOR PATENTS
P.O. Box 1450
Alexandria, Virginia 22313-1450
www.uspto.gov

APPLICATION NO.	FILING DATE	FIRST NAMED INVENTOR	ATTORNEY DOCKET NO.	CONFIRMATION NO.
13/178,800	07/08/2011	Changyong Wang	215672-5	9111

6147 7590 12/19/2011

GENERAL ELECTRIC COMPANY
GLOBAL RESEARCH
ONE RESEARCH CIRCLE
BLDG. K1-3A59
NISKAYUNA, NY 12309

EXAMINER	
FUREMAN, JARED	
ART UNIT	PAPER NUMBER
2836	

NOTIFICATION DATE	DELIVERY MODE
12/19/2011	ELECTRONIC

Please find below and/or attached an Office communication concerning this application or proceeding.

The time period for reply, if any, is set in the attached communication.

Notice of the Office communication was sent electronically on above-indicated "Notification Date" to the following e-mail address(es):

ldocket@crd.ge.com
wahld@ge.com
haeckl@ge.com

UNITED STATES PATENT AND TRADEMARK OFFICE

Commissioner for Patents
United States Patent and Trademark Office
P.O. Box 1450
Alexandria, VA 22313-1450
www.uspto.gov

GENERAL ELECTRIC COMPANY
GLOBAL RESEARCH
ONE RESEARCH CIRCLE
BLDG. K1-3A59
NISKAYUNA NY 12309

In re Application of	:	
WANG et al.	:	DECISION ON PETITION
Application No. 13/178,800	:	TO MAKE SPECIAL UNDER
Filed: November 8, 2011	:	THE GREEN TECHNOLOGY
Attorney Docket No. 215672-5	:	PILOT PROGRAM

This is a decision on the petition under 37 CFR 1.102, filed on November 10, 2011, to make the above-identified application special under the pilot program for applications pertaining to Green Technologies as set forth 74 Federal Register Notice 64666 (December 8, 2009) and amended by 75 Federal Register Notice 28554 (May 21, 2010) and 75 Federal Register Notice 69049 (November 10, 2010).

The petition is **GRANTED**.

A grantable petition to make an application special under 37 CFR 1.102 and the pilot program as set forth in 74 FR 64666 must be directed to a nonprovisional application filed under 35 USC 111(a) or be a national stage entry under 35 USC 371, exclusive of any reissue applications.

In order to qualify for special status, the following requirements must be met. 1) The application must have no more than 3 independent claims and no more than 20 total claims. 2) The application must not contain any multiple dependent claims. 3) The petition must state the basis for seeking special status, i.e., the claimed invention either: A) materially enhances the quality of the environment or B) materially contributes to: i) the discovery or development of renewable energy resources, ii) the more efficient utilization and conservation of energy resources, or iii) greenhouse gas emission reduction. 4) If the disclosure is not clear on its face that the claimed invention materially contributes under category (A) or (B), the petition must be accompanied by a statement by the applicant, assignee, or an attorney/agent registered to practice before the Office explaining how the materiality standard is met. 5) A statement that applicant will agree to make an election without traverse in a telephonic interview if a restriction requirement is made by the examiner. 6) The petition to make special must be filed electronically. 7) The petition must be filed at least one day prior to the date that a first Office Action appears in the Patent Application Information Retrieval (PAIR) system. 8) The petition must be accompanied by a request for early publication in compliance with 37 CFR 1.219 and include the publication fee as set forth in 37 CFR 1.18(d).

The requirement for a fee for consideration of the petition to make special for applications pertaining to Green Technologies has been waived.

The instant petition complies with items 1 – 8 above. Accordingly, the above-identified application has been accorded "special" status.

Telephone inquires concerning this decision should be directed to Colleen Dunn at 571-272-1170.

The application is being forwarded to the appropriate Technology Center Art Unit for action on the merits commensurate with this decision.

/Colleen Dunn/

Colleen Dunn
TQAS, TC 2800

UNITED STATES PATENT AND TRADEMARK OFFICE

UNITED STATES DEPARTMENT OF COMMERCE
United States Patent and Trademark Office
Address: COMMISSIONER FOR PATENTS
P.O. Box 1450
Alexandria, Virginia 22313-1450
www.uspto.gov

APPLICATION NO.	FILING DATE	FIRST NAMED INVENTOR	ATTORNEY DOCKET NO.	CONFIRMATION NO.
13/178,836	07/08/2011	Hugh Alexander Blakes	P11,0144 (26965-4660)	9174

26574 7590 09/14/2011

SCHIFF HARDIN, LLP
PATENT DEPARTMENT
233 S. Wacker Drive-Suite 6600
CHICAGO, IL 60606-6473

EXAMINER	
ART UNIT	PAPER NUMBER
1736	

MAIL DATE	DELIVERY MODE
09/14/2011	PAPER

Please find below and/or attached an Office communication concerning this application or proceeding.

The time period for reply, if any, is set in the attached communication.

UNITED STATES PATENT AND TRADEMARK OFFICE

Commissioner for Patents
United States Patent and Trademark Office
P.O. Box 1450
Alexandria, VA 22313-1450
www.uspto.gov

September 14, 2011 BC

In re application of	:	DECISION ON REQUEST TO
Hugh A. Blakes	:	PARTICIPATE IN PATENT
Serial No. 13/178,836	:	PROSECUTION HIGHWAY
Filed: July 08, 2011	:	PILOT PROGRAM AND
For: COIL NODE VOLTAGE OUTPUTS	:	PETITION TO MAKE SPECIAL
FOR SUPERCONDUCTING MAGNETS	:	UNDER 37 CFR 1.102(a)

This is a decision on the request for reconsideration to participate in the Patent Prosecution Highway (PPH) program filed July 19, 2011.

The request and petition are **GRANTED**.

A grantable request to participate in the PPH program and petition to make special require:

(1) The U.S. application must validly claim priority under 35 U.S.C. 119(a) to one or more applications filed in the UK IPO, note where the UK IPO application with similar claims is not the same application from which the U.S. application claims priority that the applicant must identify the relationship between the UK IPO application with similar claims and the UK IPO priority application;

(2) Applicant must submit a copy of:
The allowable/patentable claim(s) from the UK IPO application(s);

(3) Applicant must:
a. Ensure all the claims in the U.S. application must sufficiently correspond or be amended to sufficiently correspond to the allowable/patentable claim(s) in the UK IPO application(s); and
b. Submit a claims correspondence table;

(4) Examination of the U.S. application has not begun;

(5) Applicant must submit:
A copy of all of the office actions from each of the UK IPO application(s) containing the allowable/patentable claims that are the basis for the request or request that the USPTO obtain a copy from the UK IPO. If the USPTO is not able to obtain a copy of all of the office actions from the UK IPO, the applicant will be notified and requested to provide the necessary documents; and

(6) Applicant must submit:

a. An IDS listing the documents cited by the UK IPO examiner in the UK IPO office action (unless already submitted in this application); and
b. Copies of documents except U.S. patents or U.S. patent application publications (unless already submitted in this application).

The request to participate in the PPH program and petition comply with the above requirements. Accordingly, the above-identified application has been accorded "special" status.

The application is being forwarded to the examiner for action on the merits commensurate with this decision.

Any inquiry regarding this decision should be directed to Blaine Copenheaver, Quality Assurance Specialist, at (571) 272-1156.

All other inquiries concerning the examination or status of the application is accessible in the PAIR system at http://www.uspto.gov/ebc/index.html.

/Blaine Copenheaver/

Blaine Copenheaver
Quality Assurance Specialist
Technology Center 1700

UNITED STATES PATENT AND TRADEMARK OFFICE

Commissioner for Patents
United States Patent and Trademark Office
P.O. Box 1450
Alexandria, VA 22313-1450
www.uspto.gov

BURR & BROWN
PO BOX 7068
SYRACUSE, NY 13261-7068

MAILED
FEB 01 2012
OFFICE OF PETITIONS

In re Application of
Makoto Ohmori, et al.
Application No.: 13/178,881
Filed: 8 July 2011
Attorney Docket No.: 796_200
For: STRUCTURE OF SOLID OXIDE FUEL CELL

: DECISION ON REQUEST TO
: PARTICIPATE IN THE PATENT
: PROSECUTION HIGHWAY
: PROGRAM AND PETITION
: TO MAKE SPECIAL UNDER
: 37 CFR 1.102(a)

This is a decision on the request to participate in the Patent Prosecution Highway (PPH) program and the petition under 37 CFR 1.102(a), filed 20 January 2012, to make the above-identified application special.

The request and petition are **GRANTED**.

DISCUSSION

A grantable request to participate in the PPH pilot program and petition to make special require:

1. The U.S. application is
    a. a Paris Convention application which either
        i. validly claims priority under 35 U.S.C. 119(a) and 37 CFR 1.55 to one or more applications filed in the JPO, or
        ii. validly claims priority to a PCT application that contains no priority claims, or
    b. a national stage application under the PCT (an application which entered the national stage in the U.S. from a PCT international application after compliance with 35 U.S.C. 371), which PCT application
        i. validly claims priority to an application filed in the JPO, or
        ii. validly claims priority to a PCT application that contains no priority claims, or
        iii. contains no priority claim, or
    c. a so-called bypass application filed under 35 U.S.C. 111(a) which validly claims benefit under 35 U.S.C. 120 to a PCT application, which PCT application

i. validly claims priority to an application filed in the JPO, or
ii. validly claims priority to a PCT application that contains no priority claims, or
iii. contains no priority claim;

2. Applicant must submit a copy of:
   a. The allowable/patentable claim(s) from the JPO application(s);
   b. An English translation of the allowable/patentable claim(s) and
   c. A statement that the English translation is accurate;
3. Applicant must:
   a. Ensure all the claims in the U.S. application must sufficiently correspond or be amended to sufficiently correspond to the allowable/patentable claim(s) in the JPO application(s) and
   b. Submit a claims correspondence table in English;
4. Examination of the U.S. application has not begun;
5. Applicant must submit:
   a. Documentation of prior office action:
      i. a copy of the office action(s) just prior to the "Decision to Grant a Patent" from each of the JPO application(s) containing the allowable/patentable claim(s) or
      ii. if the allowable/patentable claims(s) are from a "Notification of Reasons for Refusal" then the Notification of Reasons for Refusal or
      iii. if the JPO application is a first action allowance then no office action from the JPO is necessary should be indicated on the request/petition form;
   b. An English language translation of the JPO Office action from (5)(a)(i)-(ii) above
   c. A statement that the English translation is accurate;
6. Applicant must submit:
   a. An IDS listing the documents cited by the JPO examiner in the JPO office action (unless already submitted in this application)
   b. Copies of the documents except U.S. patents or U.S. patent application publications (unless already submitted in this application);

The request to participate in the PPH pilot program and petition comply with the above requirements. Accordingly, the above-identified application has been accorded "special" status.

Telephone inquiries concerning this decision should be directed to April M. Wise at (571) 272-1642.

All other inquiries concerning the examination or status of the application is accessible in the PAIR system at http://www.uspto.gov/ebc.index.html.

This application will be forwarded to the examiner for action on the merits commensurate with this decision once this application's formality reviews have been completed.

/dab/
David Bucci
Petitions Examiner
Office of Petitions

UNITED STATES PATENT AND TRADEMARK OFFICE

Commissioner for Patents
United States Patent and Trademark Office
P.O. Box 1450
Alexandria, VA 22313-1450
www.uspto.gov

MAILED
SEP 30 2011
OFFICE OF PETITIONS

BUCHANAN, INGERSOLL & ROONEY PC
POST OFFICE BOX 1404
ALEXANDRIA VA 22313-1404

In re Application of
Bullen, et al.
Application No. 13/179,011
Filed: July 8, 2011
Atty. Dkt. No.: 1033963-000141.001

: DECISION REFUSING STATUS
: UNDER 37 CFR 1.47(a)
:
:

This decision is in response to the petition under 37 CFR 1.47(a) filed September 22, 2011.

The petition under 37 CFR 1.47(a) is **DISMISSED**.

Petitioners are given TWO MONTHS from the mailing date of this decision to reply, correcting the below-noted deficiencies. Any reply should be entitled "Request for Reconsideration of Petition Under 37 CFR 1.47(a)," and should only address the deficiencies noted herein. The reply under 37 CFR 1.47(a) may include an oath or declaration executed by the non-signing inventors. Any extensions of time will be governed by 37 CFR 1.136(a).

The above-identified application was filed July 8, 2011 without an executed oath or declaration. Accordingly, a Notice to File Missing Parts of Nonprovisional Application (Notice) was mailed July 22. The Notice required, *inter alia*, a surcharge and an executed oath or declaration.

A grantable petition under 37 CFR 1.47(a) requires: (1) proof that the non-signing inventor cannot be reached or refuses to sign the oath or declaration after having been presented with the application papers (specification, claims and drawings); (2) an acceptable oath or declaration in compliance with 35 U.S.C. §§ 115 and 116; (3) the petition fee; and (4) a statement of the last known address of the non-signing inventor.

The instant petition fails to satisfy requirements (1) and (2) set forth above.

The instant petition fails to satisfy requirement (1) set forth above.

Petitioners assert that the non-signing inventor has expressed an unwillingness to a colleague to assist assignee. In this regard, petitioners are reminded that before a refusal to sign an oath or declaration can be alleged, it must be established that the non-signing inventor has been presented with a complete copy of the application papers (specification, including claims, drawings, and oath or declaration). As the non-signing inventor has not been presented with the application papers, it cannot be found that the non-signing inventor has refused to execute the declaration.

Petitioners further assert that the application papers were mailed to the non-signing inventor at the non-signing inventor's last known address, but that the package containing the application papers was returned as undeliverable.

The petition fails to establish that diligent effort has been made to locate the non-signing inventor for presentation of the application papers. Where inability to reach or locate a non-signing inventor is alleged, petitioners are required to establish that diligent effort was made to locate the non-signing inventor and provide the non-signing inventor with a complete copy of the patent application (specification, including claims, drawings, and oath or declaration).

Any renewed petition must be supported by evidence that sufficiently establishes that despite diligent effort, the non-signing inventor cannot be located. The statement of facts must be signed, where at all possible, by a person having firsthand knowledge of the facts recited therein. Statements based on hearsay will not normally be accepted. Copies of documentary evidence such as internet searches, certified mail return receipts, cover letters of instructions, telegrams, that support a finding that the non-signing inventor could not be found or reached should be made part of the statement. The steps taken to locate the whereabouts of the non-signing inventor should be included in the statement of facts. It is important that the statement contain facts as opposed to conclusions. Petitioner should reference and supply evidence of any such searches in a renewed petition. See, MPEP 409.03(d).

As to requirement (2), the declaration submitted herewith is not acceptable as it fails to identify the instant application by filing number and filing date, and instead references a PCT application and filing date. Further, the declaration is not acceptable as it fails to set forth a mailing address for the non-signing inventor. Instead, what appears to be a business address has been set forth as the non-signing inventor's mailing address.

Correction in the form of a newly executed oath or declaration in compliance with 37 CFR 1.63 and 1.64, executed by the available inventors is required.

Please note that in accordance with MPEP 605.04(a), the application filed must be the application executed by the applicant and it is improper for anyone to alter, rewrite, or partly fill in any part of the application, including the oath or declaration, after execution of the oath or declaration by the applicant. Further, any changes made in ink in the application or oath prior to signing should be initialed and dated by the applicants prior to execution of the oath or declaration.

Moreover, an oath or declaration under 37 CFR 1.63 by each actual inventor must be presented. While each inventor need not execute the same oath or declaration, each oath or declaration executed by an inventor must contain a complete listing of all inventors so as to clearly indicate what each inventor believes to be the appropriate inventive entity. Where individual declarations are executed, they must be submitted as individual declarations rather than combined into one declaration (by combining the signature pages).

As to item (3), petitioners herein submitted $130.00. However, the required petition fee is currently $200.00. See, 37 CFR 1.17(g). The remaining $70.00 due has been charged to the authorized deposit account.

As to item (4), the last known address of the non-signing inventor has been provided. However, should further research reveal a more current address for the non-signing inventor, such information should be provided by way of renewed petition.

An application filed pursuant to 37 CFR 1.47 must state the last known address of the non-signing inventor. That address should be the last known address at which the inventor customarily receives mail. Ordinarily, the last known address will be the last known residence of the non-signing inventor. Inasmuch as a non-signing inventor is notified that an application pursuant to 37 CFR 1.47 has been filed on his or her behalf, other addresses at which the non-signing inventor may be reached should also be given. Each applicant's mailing or post office address is required to be supplied on the oath or declaration, if not stated in an application data sheet. Applicant's mailing address means that address at which he or she customarily receives his or her mail. Either applicant's home or business address is acceptable as the mailing address. The mailing address should include the ZIP Code designation. The object of requiring each applicant's mailing address is to enable the Office to communicate directly with the applicant if desired; hence, the address of the attorney with instruction to send communications to applicant in care of the attorney is not sufficient. In situations where an inventor does not execute the oath or declaration and the inventor is not deceased, such as in an application filed under 37 CFR 1.47, the inventor's most recent home address must be given to enable the Office to communicate directly with the inventor as necessary. See, MPEP §§ 409.03(e) and 605.03.

Further correspondence with respect to this matter should be addressed as follows:

By mail:	Mail Stop Petition Commissioner for Patents P.O. Box 1450 Alexandria, VA 22313-1450
By facsimile:	(571) 273-8300
By hand:	U.S. Patent and Trademark Office Customer Service Window Mail Stop Petition Randolph Building 401 Dulany Street Alexandria, VA 22314

Telephone inquiries related to this decision may be directed to the undersigned at (571) 272-3205.

/ALESIA M. BROWN/

Alesia M. Brown
Attorney Advisor
Office of Petitions

Results for Serial No:13179194

To download or view the result, click on a link

Result Type	View	Download	Print
EAST file with preloaded results	View	DownLoad	Print
Ranked patent/PGPub number list	View	DownLoad	Print
Ranked patent/PGPub number list with closeness factors	View	DownLoad	Print
Common classifications for patents/PGPub numbers	View	DownLoad	Print
Patents/PGPub numbers with detailed information on classes	View	DownLoad	Print
Results organized into EAST format	View	DownLoad	Print
Results organized into WEST format	View	DownLoad	Print
Word frequency list	View	DownLoad	Print

Result:

ID↑
20010047477
20020144047
20020166117
20040098458
20040098717
20040098728
20040098729
20040104927
20040107420
20050060432
20050160419
20060050649
20060085549
20060288212
20070250520
20080027824

20090094592
20090106424
20090217299
20090234858
5734905
5761421
5778385
5802448
5809506
5828843
5983262
6018805
6026404
6081826
6230228
6247056
6332180
6385643
6430622
6883015
6990616
7072894
7370336
7430616
7434220
7480699
7543069
7681184
7688741
7711723
7739663
7926086
7962620
8001214

For questions or comments, please contact Patent Automation Feedback

UNITED STATES PATENT AND TRADEMARK OFFICE

UNITED STATES DEPARTMENT OF COMMERCE
United States Patent and Trademark Office
Address: COMMISSIONER FOR PATENTS
P.O. Box 1450
Alexandria, Virginia 22313-1450
www.uspto.gov

APPLICATION NO.	FILING DATE	FIRST NAMED INVENTOR	ATTORNEY DOCKET NO.	CONFIRMATION NO.
13/179,207	07/08/2011	Ning Zhu	HUAW02-10120	9923

7590 04/11/2012

Docket Clerk/HTCL
P.O. Drawer 800889
Dallas, TX 75380

EXAMINER	
KIZOU, HASSAN	

ART UNIT	PAPER NUMBER
2472	

NOTIFICATION DATE	DELIVERY MODE
04/11/2012	ELECTRONIC

DECISION GRANTING PETITION UNDER 37 CFR 1.138(d)

The declaration of express abandonment is recognized

This is in response to the petition under 37 CFR 1.138(d), requesting for a refund of any previously paid search fee and excess claims fee in the above-identified application.

The petition is granted.

The express abandonment is recognized. Any previously paid search fee and excess claims fee are hereby refunded.

Telephone inquiries should be directed to the Office of Data Management at (571) 272-4200.

Nicole Farmer

Patent Publication Branch
Office of Data Management

UNITED STATES PATENT AND TRADEMARK OFFICE

Commissioner for Patents
United States Patent and Trademark Office
P.O. Box 1450
Alexandria, VA 22313-1450
www.uspto.gov

GEN PROBE INCORPORATED
10210 GENETIC CENTER DRIVE
Mail Stop #1 / Patent Dept.
SAN DIEGO CA 92121

MAILED
NOV 16 2011
OFFICE OF PETITIONS

In re Application of :
Norman C. Nelson et al. :
Application No. 13/179,260 :
Filed: July 8, 2011 :
Attorney Docket No. GP182-19.CN8 :

DECISION ON PETITION

This is a decision on the petition, filed September 12, 2011, which is being treated as a petition requesting that the requirement of 37 CFR 84(p)(3) be waived or suspended pursuant to 37 CFR 1.183.

The petition is **dismissed**.

37 CFR 1.183 provides that in an extraordinary situation, when justice requires, any requirement of the regulations which is not a requirement of the statutes may be suspended or waived by the Commissioner.

Petitioner requests that the requirement that numbers, letters and reference characters provided on drawings must be 32 cm. (1/8 inch) in height be waived. Petitioner indicates that it would be practically impossible to meet the character size standard of Rule 1.84(p) without rendering the drawings too large to fit on a single page.

The drawing figures in question, figures 21-23 and 26, fill their entire drawing figure page. They will most likely be reduced further during pre-grant and grant processing (up to 70%) in order to fit them onto the composed pages and allow for proper margins. Any further reduction in the size of the drawings would make this print illegible and not comprehensible.

While petitioner may desire having the circuits shown on the above identified drawings encompassed on single pages, there is no prohibition to enlarging them to fit on multiple pages to provide for required sizing of letters and reference numbers. The circumstances presented in the petition are not extraordinary circumstances where the interests of justice requires the granting of relief. Accordingly, the petition is dismissed.

Telephone inquiries regarding this communication should be directed to Carl Friedman at (571) 272-6842.

David Bucci
Petitions Examiner
Office of Petitions

UNITED STATES PATENT AND TRADEMARK OFFICE

Commissioner for Patents
United States Patent and Trademark Office
P.O. Box 1450
Alexandria, VA 22313-1450
www.uspto.gov

Decision Date : February 23, 2012

In re Application of :

Frank Richmond

Application No : 13179263

Filed : 08-Jul-2011

Attorney Docket No : 6976-100414-US

DECISION ON REQUEST TO WITHDRAW AS ATTORNEY/AGENTOF RECORD

This is an electronic decision on the Request to Withdraw as attorney or agent of record under 37 CFR § 1.36(b), filed February 23, 2012

The request is **APPROVED.**

The request was signed by Timothy E. Levstik (registration no. 30192) on behalf of all attorneys/agents associated with Customer Number 22242 . All attorneys/agents associated with Cusotmer Number 22242 have been withdrawn.

Since there are no remaining attorneys of record, all future communications from the Office will be directed to the first named inventor or assignee that has properly made itself of record pursuant to 37 CFR 3.71, with correspondence address:

Name	Frank M. Richmond
Name2	
Address 1	205 Grant Street, Unit A
Address 2	
City	Harvard
State	IL
Postal Code	60033
Country	US

As a reminder, requester is required to inform the first named inventor or assignee that has properly made itself of record pursuant to 37 CFR 3.71 of the electronically processed petition.

Telephone inquiries concerning this decision should be directed to the Patent Electronic Business Center (EBC) at 866-217-9197.

Office of Petitions

Doc Code: PET.AUTO **Document Description: Petition automatically granted by EFS-Web**	PTO/SB/83 U.S. Patent and Trademark Office Department of Commerce

Electronic Petition Request	**REQUEST FOR WITHDRAWAL AS ATTORNEY OR AGENT AND CHANGE OF CORRESPONDENCE ADDRESS**
Application Number	13179263
Filing Date	08-Jul-2011
First Named Inventor	Frank Richmond
Art Unit	3635
Examiner Name	CHARISSA AHMAD
Attorney Docket Number	6976-100414-US
Title	Device And Method For Installing Building Material

◉ Please withdraw me as attorney or agent for the above identified patent application and the practitioners of record associated with Customer Number: 22242

The reason(s) for this request are those described in 37 CFR:

10.40(c)(1)(vi)

Certifications

☒ I/We have given reasonable notice to the client, prior to the expiration of the response period, that the practitioner(s) intend to withdraw from employment

☒ I/We have delivered to the client or a duly authorized representative of the client all papers and property (including funds) to which the client is entitled

☒ I/We have notified the client of any responses that may be due and the time frame within which the client must respond

Change the correspondence address and direct all future correspondence to the first named inventor or assignee that has properly made itself of record pursuant to 37 CFR 3.71:

Name	Frank M. Richmond
Address	205 Grant Street, Unit A
City	Harvard
State	IL
Postal Code	60033
Country	US

I am authorized to sign on behalf of myself and all withdrawing practitioners.	
Signature	/Timothy E. Levstik/
Name	Timothy E. Levstik
Registration Number	30192

Doc Code: PET.GREEN
Document Description: Petition for Green Tech Pilot

PTO/SB/420 (03-11)

PETITION TO MAKE SPECIAL UNDER THE GREEN TECHNOLOGY PILOT PROGRAM

Attorney Docket Number: 12524.37.6.1.3	Application Number (if known):	Filing date:

First Named Inventor: JEFFREY H. MAXWELL

Title: High-Efficiency Heat Pumps

APPLICANT HEREBY REQUESTS TO PARTICIPATE IN THE GREEN TECHNOLOGY PILOT PROGRAM FOR THE ABOVE-IDENTIFIED APPLICATION. **See Instruction Sheet on page 2.**

This petition must be timely filed electronically using the USPTO electronic filing system, EFS-Web.

1. By filing this petition:

   Applicant is requesting early publication: Applicant hereby requests early publication under 37 CFR 1.219 and the publication fee set forth in 37 CFR 1.18(d) accompanies this request.

2. By filing this petition: applicant is agreeing to make an election without traverse in a telephonic interview and elect an invention that meets the eligibility requirements for the Green Technology Pilot Program, if the Office determines that the claims are not obviously directed to a single invention. See Instruction Sheet.

3. This request is accompanied by statements of special status for the eligibility requirement.

4. The application contains no more than three (3) independent claims and twenty (20) total claims.

5. The application does not contain any multiple dependent claims.

6. Other attachments: Preliminary Amendment and Statement of Special Status

Signature /Thomas R. Hipkins/	Date 07/08/2011
Name (Print/Typed) Thomas R. Hipkins	Registration Number 57659

Note: *Signatures of all the inventors or assignees of record of the entire interest or their representative(s) are required in accordance with 37 CFR 1.33 and 11.18. Please see 37 CFR 1.4(d) for the form of the signature. If necessary, submit multiple forms for more than one signature, see below*.*

☐ *Total of _____ forms are submitted.

If you need assistance in completing the form, call 1-800-PTO-9199 and select option 2.

UNITED STATES PATENT AND TRADEMARK OFFICE

UNITED STATES DEPARTMENT OF COMMERCE
United States Patent and Trademark Office
Address: COMMISSIONER FOR PATENTS
P.O. Box 1450
Alexandria, Virginia 22313-1450
www.uspto.gov

APPLICATION NO.	FILING DATE	FIRST NAMED INVENTOR	ATTORNEY DOCKET NO.	CONFIRMATION NO.
13/179,288	07/08/2011	Jeffrey H. Maxwell	12524.37.6.1.3	1103

22859 7590 08/11/2011

FREDRIKSON & BYRON, P.A.
INTELLECTUAL PROPERTY GROUP
200 SOUTH SIXTH STREET, SUITE 4000
MINNEAPOLIS, MN 55402

EXAMINER	
ART UNIT	PAPER NUMBER
3744	

NOTIFICATION DATE	DELIVERY MODE
08/11/2011	ELECTRONIC

Please find below and/or attached an Office communication concerning this application or proceeding.

The time period for reply, if any, is set in the attached communication.

Notice of the Office communication was sent electronically on above-indicated "Notification Date" to the following e-mail address(es):

IP@FREDLAW.COM

UNITED STATES PATENT AND TRADEMARK OFFICE

Commissioner for Patents
United States Patent and Trademark Office
P.O. Box 1450
Alexandria, VA 22313-1450
www.uspto.gov

FREDRIKSON & BYRON, P.A.
INTELLECTUAL PROPERTY GROUP
200 SOUTH SIXTH STREET, SUITE 4000
MINNEAPOLIS MN 55402

In re Application of :
MAXWELL, JEFFREY H. :
Application No. 13/179,288 :
Filed: 07/08/2011 :
Attorney Docket No. 12524.37.6.1.3 :

DECISION ON PETITION
TO MAKE SPECIAL UNDER
THE GREEN TECHNOLOGY
PILOT PROGRAM

This is a decision on the renewed petition under 37 CFR 1.102, filed July 08, 2011 to make the above-identified application special under the pilot program for applications pertaining to Green Technologies as set forth in 74 Federal Register Notice 64666 (December 8, 2009) and amended by 75 Federal Register Notice 28554 (May 21, 2010) and 75 Federal Register Notice 69049 (November 10, 2010).

The petition is **granted.**

A grantable petition to make an application special under 37 CFR 1.102 and the pilot program as set forth in 74 FR 64666 must be directed to a nonprovisional application filed under 35 USC 111(a) or be a national stage entry under 35 USC 371, exclusive of any reissue applications.

In order to qualify for special status, the following requirements must be met. 1) The application must have no more than 3 independent claims and no more than 20 total claims. 2) The application must not contain any multiple dependent claims. 3) The petition must state the basis for seeking special status, i.e., the claimed invention either: A) materially enhances the quality of the environment or B) materially contributes to: i) the discovery or development of renewable energy resources, ii) the more efficient utilization and conservation of energy resources, or iii) greenhouse gas emission reduction. 4) If the disclosure is not clear on its face that the claimed invention materially contributes under category (A) or (B), the petition must be accompanied by a statement by the applicant, assignee, or an attorney/agent registered to practice before the Office explaining how the materiality standard is met. 5) A statement that applicant will agree to make an election without traverse in a telephonic interview if a restriction requirement is made by the examiner. 6) The petition to make special must be filed electronically. 7) The petition must be filed at least one day prior to the date that a first Office Action appears in the Patent Application Information Retrieval (PAIR) system. 8) The petition must be accompanied by a request for early publication in compliance with 37 CFR 1.219 and include the publication fee as set forth in 37 CFR 1.18(d).

The requirement for a fee for consideration of the petition to make special for applications pertaining to Green Technologies has been waived.

The instant petition complies with items 1 – 8 above. Accordingly, the above-identified application has been accorded "special" status.

Telephone inquires concerning this decision should be directed to Henry C. Yuen at 571-272-4856.

This application will be forwarded to the Technology Center Art Unit 3744 for action on the merits commensurate with this decision.

/Henry C. Yuen/

Henry C. Yuen
Quality Assurance Specialist
Technology Center TC 3700

Doc Code: PET.GREEN
Document Description: Petition for Green Tech Pilot

PTO/SB/420 (03-11)

PETITION TO MAKE SPECIAL UNDER THE GREEN TECHNOLOGY PILOT PROGRAM

Attorney Docket Number: 12524.37.6.2.3	Application Number (if known):	Filing date:

First Named Inventor: Jeffrey H. Maxwell

Title: Controls for High-Efficiency Heat Pumps

APPLICANT HEREBY REQUESTS TO PARTICIPATE IN THE GREEN TECHNOLOGY PILOT PROGRAM FOR THE ABOVE-IDENTIFIED APPLICATION. **See Instruction Sheet on page 2.**

This petition must be timely filed electronically using the USPTO electronic filing system, EFS-Web.

1. By filing this petition:

   Applicant is requesting early publication: Applicant hereby requests early publication under 37 CFR 1.219 and the publication fee set forth in 37 CFR 1.18(d) accompanies this request.

2. By filing this petition: applicant is agreeing to make an election without traverse in a telephonic interview and elect an invention that meets the eligibility requirements for the Green Technology Pilot Program, if the Office determines that the claims are not obviously directed to a single invention. See Instruction Sheet.

3. This request is accompanied by statements of special status for the eligibility requirement.

4. The application contains no more than three (3) independent claims and twenty (20) total claims.

5. The application does not contain any multiple dependent claims.

6. Other attachments: Preliminary Amendment and Statement of Special Status

Signature /Thomas R. Hipkins/	Date 2011-07-08
Name (Print/Typed) Thomas R. Hipkins	Registration Number 57659

Note: *Signatures of all the inventors or assignees of record of the entire interest or their representative(s) are required in accordance with 37 CFR 1.33 and 11.18. Please see 37 CFR 1.4(d) for the form of the signature. If necessary, submit multiple forms for more than one signature, see below*.*

☐ *Total of _____ forms are submitted.

If you need assistance in completing the form, call 1-800-PTO-9199 and select option 2.

UNITED STATES PATENT AND TRADEMARK OFFICE

UNITED STATES DEPARTMENT OF COMMERCE
United States Patent and Trademark Office
Address: COMMISSIONER FOR PATENTS
P.O. Box 1450
Alexandria, Virginia 22313-1450
www.uspto.gov

APPLICATION NO.	FILING DATE	FIRST NAMED INVENTOR	ATTORNEY DOCKET NO.	CONFIRMATION NO.
13/179,296	07/08/2011	Jeffrey H. Maxwell	12524.37.6.2.3	1114

22859 7590 07/29/2011

FREDRIKSON & BYRON, P.A.
INTELLECTUAL PROPERTY GROUP
200 SOUTH SIXTH STREET, SUITE 4000
MINNEAPOLIS, MN 55402

EXAMINER	
ART UNIT	PAPER NUMBER
3784	

NOTIFICATION DATE	DELIVERY MODE
07/29/2011	ELECTRONIC

Please find below and/or attached an Office communication concerning this application or proceeding.

The time period for reply, if any, is set in the attached communication.

Notice of the Office communication was sent electronically on above-indicated "Notification Date" to the following e-mail address(es):

IP@FREDLAW.COM

UNITED STATES PATENT AND TRADEMARK OFFICE

Commissioner for Patents
United States Patent and Trademark Office
P.O. Box 1450
Alexandria, VA 22313-1450
www.uspto.gov

FREDRIKSON & BYRON, P.A.
INTELLECTUAL PROPERTY GROUP
200 SOUTH SIXTH STREET, SUITE 4000
MINNEAPOLIS MN 55402

In re Application of
MAXWELL, JEFFREY H.
Application No. 13/179296
Filed: July 8, 2011
Attorney Docket No. 12524.37.6.2.3

DECISION ON PETITION
TO MAKE SPECIAL UNDER
THE GREEN TECHNOLOGY
PILOT PROGRAM

This is a decision on the petition under 37 CFR 1.102, filed July 8, 2011 to make the above-identified application special under the pilot program for applications pertaining to Green Technologies as set forth in 74 Federal Register Notice 64666 (December 8, 2009) and amended by 75 Federal Register Notice 28554 (May 21, 2010) and 75 Federal Register Notice 69049 (November 10, 2010).

The petition is **granted**.

A grantable petition to make an application special under 37 CFR 1.102 and the pilot program as set forth in 74 FR 64666 must be directed to a nonprovisional application filed under 35 USC 111(a) or be a national stage entry under 35 USC 371, exclusive of any reissue applications.

If reconsideration of this decision is desired, a petition for reconsideration must be filed within ONE (1) MONTH OR THIRTY (30) DAYS from the mail date of this decision, whichever is longer. No extension of this time limit can be granted under 37 CFR 1.136(a) or (b). The petition for reconsideration should include an exhaustive attempt to provide the lacking item(s) noted below, since, after a decision on the petition for reconsideration, no further reconsideration or review of the matter will be undertaken by the Director.

In order to qualify for special status, the following requirements must be met. 1) The application must have no more than 3 independent claims and no more than 20 total claims. 2) The application must not contain any multiple dependent claims. 3) The petition must state the basis for seeking special status, i.e., the claimed invention either: A) materially enhances the quality of the environment or B) materially contributes to: i) the discovery or development of renewable energy resources, ii) the more efficient utilization and conservation of energy resources, or iii) greenhouse gas emission reduction. 4) If the disclosure is not clear on its face that the claimed invention materially contributes under category (A) or (B), the petition must be accompanied by

a statement by the applicant, assignee, or an attorney/agent registered to practice before the Office explaining how the materiality standard is met. 5) A statement that applicant will agree to make an election without traverse in a telephonic interview if a restriction requirement is made by the examiner. 6) The petition to make special must be filed electronically. 7) The petition must be filed at least one day prior to the date that a first Office Action appears in the Patent Application Information Retrieval (PAIR) system. 8) The petition must be accompanied by a request for early publication in compliance with 37 CFR 1.219 and include the publication fee as set forth in 37 CFR 1.18(d).

The requirement for a fee for consideration of the petition to make special for applications pertaining to Green Technologies has been waived.

The instant petition complies with items 1 – 8 above. Accordingly, the above-identified application has been accorded "special" status.

Telephone inquires concerning this decision should be directed to Henry C. Yuen at 571-272-4856.

This application will be forwarded to the Technology Center Art Unit 3784 for action on the merits commensurate with this decision.

/Henry C. Yuen/

Henry C. Yuen
Quality Assurance Specialist
Technology Center TC 3700

Doc Code: PET.GREEN
Document Description: Petition for Green Tech Pilot

PTO/SB/420 (03-11)

PETITION TO MAKE SPECIAL UNDER THE GREEN TECHNOLOGY PILOT PROGRAM

Attorney Docket Number: 12524.37.6.3.3	Application Number (if known):	Filing date:

First Named Inventor: Jeffrey H. Maxwell

Title: Methods and Equipment for Geothermally Exchanging Energy

APPLICANT HEREBY REQUESTS TO PARTICIPATE IN THE GREEN TECHNOLOGY PILOT PROGRAM FOR THE ABOVE-IDENTIFIED APPLICATION. See Instruction Sheet on page 2.

This petition must be timely filed electronically using the USPTO electronic filing system, EFS-Web.

1. By filing this petition:

   Applicant is requesting early publication: Applicant hereby requests early publication under 37 CFR 1.219 and the publication fee set forth in 37 CFR 1.18(d) accompanies this request.

2. By filing this petition: applicant is agreeing to make an election without traverse in a telephonic interview and elect an invention that meets the eligibility requirements for the Green Technology Pilot Program, if the Office determines that the claims are not obviously directed to a single invention. See Instruction Sheet.

3. This request is accompanied by statements of special status for the eligibility requirement.

4. The application contains no more than three (3) independent claims and twenty (20) total claims.

5. The application does not contain any multiple dependent claims.

6. Other attachments: Preliminary Amendment and Statement of Special Status

Signature /Thomas R. Hipkins/	Date 2011-07-08
Name (Print/Typed) Thomas R. Hipkins	Registration Number 57659

Note: *Signatures of all the inventors or assignees of record of the entire interest or their representative(s) are required in accordance with 37 CFR 1.33 and 11.18. Please see 37 CFR 1.4(d) for the form of the signature. If necessary, submit multiple forms for more than one signature, see below*.*

☐ *Total of _____ forms are submitted.

If you need assistance in completing the form, call 1-800-PTO-9199 and select option 2.

UNITED STATES PATENT AND TRADEMARK OFFICE

UNITED STATES DEPARTMENT OF COMMERCE
United States Patent and Trademark Office
Address: COMMISSIONER FOR PATENTS
P.O. Box 1450
Alexandria, Virginia 22313-1450
www.uspto.gov

APPLICATION NO.	FILING DATE	FIRST NAMED INVENTOR	ATTORNEY DOCKET NO.	CONFIRMATION NO.
13/179,301	07/08/2011	Jeffrey H. Maxwell	12524.37.6.3.3	1122

22859 7590 07/29/2011

FREDRIKSON & BYRON, P.A.
INTELLECTUAL PROPERTY GROUP
200 SOUTH SIXTH STREET, SUITE 4000
MINNEAPOLIS, MN 55402

EXAMINER	
ART UNIT	PAPER NUMBER
3744	

NOTIFICATION DATE	DELIVERY MODE
07/29/2011	ELECTRONIC

Please find below and/or attached an Office communication concerning this application or proceeding.

The time period for reply, if any, is set in the attached communication.

Notice of the Office communication was sent electronically on above-indicated "Notification Date" to the following e-mail address(es):

IP@FREDLAW.COM

UNITED STATES PATENT AND TRADEMARK OFFICE

Commissioner for Patents
United States Patent and Trademark Office
P.O. Box 1450
Alexandria, VA 22313-1450
www.uspto.gov

FREDRIKSON & BYRON, P.A.
INTELLECTUAL PROPERTY GROUP
200 SOUTH SIXTH STREET, SUITE 4000
MINNEAPOLIS MN 55402

In re Application of
MAXWELL, JEFFREY H.
Application No. 13/179301
Filed: July 8, 2011
Attorney Docket No. 12524.37.6.3.3

DECISION ON PETITION
TO MAKE SPECIAL UNDER
THE GREEN TECHNOLOGY
PILOT PROGRAM

This is a decision on the petition under 37 CFR 1.102, filed July 8, 2011 to make the above-identified application special under the pilot program for applications pertaining to Green Technologies as set forth in 74 Federal Register Notice 64666 (December 8, 2009) and amended by 75 Federal Register Notice 28554 (May 21, 2010) and 75 Federal Register Notice 69049 (November 10, 2010).

The petition is **granted**.

A grantable petition to make an application special under 37 CFR 1.102 and the pilot program as set forth in 74 FR 64666 must be directed to a nonprovisional application filed under 35 USC 111(a) or be a national stage entry under 35 USC 371, exclusive of any reissue applications.

If reconsideration of this decision is desired, a petition for reconsideration must be filed within ONE (1) MONTH OR THIRTY (30) DAYS from the mail date of this decision, whichever is longer. No extension of this time limit can be granted under 37 CFR 1.136(a) or (b). The petition for reconsideration should include an exhaustive attempt to provide the lacking item(s) noted below, since, after a decision on the petition for reconsideration, no further reconsideration or review of the matter will be undertaken by the Director.

In order to qualify for special status, the following requirements must be met. 1) The application must have no more than 3 independent claims and no more than 20 total claims. 2) The application must not contain any multiple dependent claims. 3) The petition must state the basis for seeking special status, i.e., the claimed invention either: A) materially enhances the quality of the environment or B) materially contributes to: i) the discovery or development of renewable energy resources, ii) the more efficient utilization and conservation of energy resources, or iii) greenhouse gas emission reduction. 4) If the disclosure is not clear on its face that the claimed invention materially contributes under category (A) or (B), the petition must be accompanied by

a statement by the applicant, assignee, or an attorney/agent registered to practice before the Office explaining how the materiality standard is met. 5) A statement that applicant will agree to make an election without traverse in a telephonic interview if a restriction requirement is made by the examiner. 6) The petition to make special must be filed electronically. 7) The petition must be filed at least one day prior to the date that a first Office Action appears in the Patent Application Information Retrieval (PAIR) system. 8) The petition must be accompanied by a request for early publication in compliance with 37 CFR 1.219 and include the publication fee as set forth in 37 CFR 1.18(d).

The requirement for a fee for consideration of the petition to make special for applications pertaining to Green Technologies has been waived.

The instant petition complies with items 1 – 8 above. Accordingly, the above-identified application has been accorded "special" status.

Telephone inquires concerning this decision should be directed to Henry C. Yuen at 571-272-4856.

This application will be forwarded to the Technology Center Art Unit 3744 for action on the merits commensurate with this decision.

/Henry C. Yuen/

Henry C. Yuen
Quality Assurance Specialist
Technology Center TC 3700

Doc Code: PET.GREEN
Document Description: Petition for Green Tech Pilot

PTO/SB/420 (12-09)
Approved for use through 05/31/2010. OMB 0651-0062
U.S. Patent and Trademark Office; U. S. DEPARTMENT OF COMMERCE
Under the Paperwork Reduction Act of 1995, no persons are required to respond to a collection of information unless it displays a valid OMB control number.

PETITION TO MAKE SPECIAL UNDER THE GREEN TECHNOLOGY PILOT PROGRAM

Attorney Docket Number: 12524.37.6.4.3	Application Number (if known):	Filing date:

First Named Inventor: JEFFREY H. MAXWELL

Title: METHODS AND EQUIPMENT FOR HEATING AND COOLING BUILDING ZONES

APPLICANT HEREBY REQUESTS TO PARTICIPATE IN THE GREEN TECHNOLOGY PILOT PROGRAM FOR THE ABOVE-IDENTIFIED APPLICATION. See Instruction Sheet on page 2.

This petition must be timely filed electronically using the USPTO electronic filing system, EFS-Web.

1. By filing this petition:

   Applicant is requesting early publication: Applicant hereby requests early publication under 37 CFR 1.219 and the publication fee set forth in 37 CFR 1.18(d) accompanies this request. Applicant hereby rescinds under 37 CFR 1.213(b) any previous filed request that the above-identified application not be published under 35 U.S.C. 122(b).

   If the application has been published, the petition must still be accompanied by the publication fee set forth in 37 CFR 1.18(d) and a statement that the application has been published.

2. By filing this petition: applicant is agreeing to make an election without traverse in a telephonic interview and elect an invention that meets the eligibility requirement and classification requirement set forth in the notice entitled "Pilot Program for Green Technologies Including Greenhouse Gas Reduction" that was published in the Federal Register if the Office determines that the claims are not obviously directed to a single invention.

3. This request is accompanied by statements of special status for the eligibility requirement.

4. The application contains no more than three (3) independent claims and twenty (20) total claims.

5. The application does not contain any multiple dependent claims.

6. Other attachments: Preliminary Amendment and Statement of Special Status

Signature /Thomas R. Hipkins/	Date 2011-07-08
Name (Print/Typed) Thomas R. Hipkins	Registration Number 57659

Note: *Signatures of all the inventors or assignees of record of the entire interest or their representative(s) are required in accordance with 37 CFR 1.33 and 11.18. Please see 37 CFR 1.4(d) for the form of the signature. If necessary, submit multiple forms for more than one signature, see below*.*

☐ *Total of _____ forms are submitted.

The information is required to obtain or retain a benefit by the public which is to file (and by the USPTO to process) an application. Confidentiality is governed by 35 U.S.C. 122 and 37 CFR 1.11 and 1.14. This collection is estimated to take 12 hours to complete, including gathering, preparing, and submitting the completed application form to the USPTO. Time will vary depending upon the individual case. Any comments on the amount of time you require to complete this form and/or suggestions for reducing this burden, should be sent to the Chief Information Officer, U.S. Patent and Trademark Office, U.S. Department of Commerce, P.O. Box 1450, Alexandria, VA 22313-1450. DO NOT SEND FEES OR COMPLETED FORMS TO THIS ADDRESS. **SEND TO: Commissioner for Patents, P.O. Box 1450, Alexandria, VA 22313-1450.**

If you need assistance in completing the form, call 1-800-PTO-9199 and select option 2.

UNITED STATES PATENT AND TRADEMARK OFFICE

UNITED STATES DEPARTMENT OF COMMERCE
United States Patent and Trademark Office
Address: COMMISSIONER FOR PATENTS
P.O. Box 1450
Alexandria, Virginia 22313-1450
www.uspto.gov

APPLICATION NO.	FILING DATE	FIRST NAMED INVENTOR	ATTORNEY DOCKET NO.	CONFIRMATION NO.
13/179,312	07/08/2011	Jeffrey H. Maxwell	12524.37.6.4.3	1150

22859 7590 08/10/2011

FREDRIKSON & BYRON, P.A.
INTELLECTUAL PROPERTY GROUP
200 SOUTH SIXTH STREET, SUITE 4000
MINNEAPOLIS, MN 55402

EXAMINER	
ART UNIT	PAPER NUMBER
3744	

NOTIFICATION DATE	DELIVERY MODE
08/10/2011	ELECTRONIC

Please find below and/or attached an Office communication concerning this application or proceeding.

The time period for reply, if any, is set in the attached communication.

Notice of the Office communication was sent electronically on above-indicated "Notification Date" to the following e-mail address(es):

IP@FREDLAW.COM

UNITED STATES PATENT AND TRADEMARK OFFICE

Commissioner for Patents
United States Patent and Trademark Office
P.O. Box 1450
Alexandria, VA 22313-1450
www.uspto.gov

FREDRIKSON & BYRON, P.A.
INTELLECTUAL PROPERTY GROUP
200 SOUTH SIXTH STREET, SUITE 4000
MINNEAPOLIS MN 55402

In re Application of :
MAXWELL, JEFFREY H. :
Application No. 13/179,312 :
Filed: 07/08/2011 :
Attorney Docket No. 12524.37.6.4.3 :

DECISION ON PETITION
TO MAKE SPECIAL UNDER
THE GREEN TECHNOLOGY
PILOT PROGRAM

This is a decision on the renewed petition under 37 CFR 1.102, filed July 07, 2011 to make the above-identified application special under the pilot program for applications pertaining to Green Technologies as set forth in 74 Federal Register Notice 64666 (December 8, 2009) and amended by 75 Federal Register Notice 28554 (May 21, 2010) and 75 Federal Register Notice 69049 (November 10, 2010).

The petition is **granted.**

A grantable petition to make an application special under 37 CFR 1.102 and the pilot program as set forth in 74 FR 64666 must be directed to a nonprovisional application filed under 35 USC 111(a) or be a national stage entry under 35 USC 371, exclusive of any reissue applications.

In order to qualify for special status, the following requirements must be met. 1) The application must have no more than 3 independent claims and no more than 20 total claims. 2) The application must not contain any multiple dependent claims. 3) The petition must state the basis for seeking special status, i.e., the claimed invention either: A) materially enhances the quality of the environment or B) materially contributes to: i) the discovery or development of renewable energy resources, ii) the more efficient utilization and conservation of energy resources, or iii) greenhouse gas emission reduction. 4) If the disclosure is not clear on its face that the claimed invention materially contributes under category (A) or (B), the petition must be accompanied by a statement by the applicant, assignee, or an attorney/agent registered to practice before the Office explaining how the materiality standard is met. 5) A statement that applicant will agree to make an election without traverse in a telephonic interview if a restriction requirement is made by the examiner. 6) The petition to make special must be filed electronically. 7) The petition must be filed at least one day prior to the date that a first Office Action appears in the Patent Application Information Retrieval (PAIR) system. 8) The petition must be accompanied by a request for early publication in compliance with 37 CFR 1.219 and include the publication fee as set forth in 37 CFR 1.18(d).

The requirement for a fee for consideration of the petition to make special for applications pertaining to Green Technologies has been waived.

The instant petition complies with items 1 – 8 above. Accordingly, the above-identified application has been accorded "special" status.

Telephone inquires concerning this decision should be directed to Henry C. Yuen at 571-272-4856.

This application will be forwarded to the Technology Center Art Unit 3744 for action on the merits commensurate with this decision.

/Henry C. Yuen/

Henry C. Yuen
Quality Assurance Specialist
Technology Center TC 3700

UNITED STATES PATENT AND TRADEMARK OFFICE

UNITED STATES DEPARTMENT OF COMMERCE
United States Patent and Trademark Office
Address: COMMISSIONER FOR PATENTS
P.O. Box 1450
Alexandria, Virginia 22313-1450
www.uspto.gov

APPLICATION NO.	FILING DATE	FIRST NAMED INVENTOR	ATTORNEY DOCKET NO.	CONFIRMATION NO.
13/179,315	07/08/2011	Michael T. Nordsiek	83136CON12(54610)	1155

21874 7590 08/03/2011
EDWARDS ANGELL PALMER & DODGE LLP
P.O. BOX 55874
BOSTON, MA 02205

EXAMINER	
MCMILLIAN, KARA RENITA	

ART UNIT	PAPER NUMBER
1627	

MAIL DATE	DELIVERY MODE
08/03/2011	PAPER

Please find below and/or attached an Office communication concerning this application or proceeding.

The time period for reply, if any, is set in the attached communication.

UNITED STATES PATENT AND TRADEMARK OFFICE

Commissioner for Patents
United States Patent and Trademark Office
P.O. Box 1450
Alexandria, VA 22313-1450
www.uspto.gov

AUG 03 2011

EDWARDS ANGELL PALMER & DODGE LLP
P.O. BOX 55874
BOSTON MA 02205

In re Application of:
Nordsiek et al.

Serial No.: 13/179,315

Filed: July 8, 2011

Docket: **83136CON12(54610)**

DECISION ON PETITION TO MAKE SPECIAL FOR NEW APPLICATION UNDER 37 C.F.R. § 1.102 & M.P.E.P. § 708.02

Title: **2 X 2 X 2 WEEK TREATMENT REGIMEN FOR TREATING ACTINIC KERATOSIS WITH PHARMACEUTICAL COMPOSITIONS FORMULATED WITH 2.5% IMIQUIMOD**

This is a decision on the petition July 8, 2011, to make the above-identified application special for accelerated examination procedure under 37 C.F.R. § 1.102(d).

The petition to make the application special is GRANTED.

The application is eligible for accelerated examination and the petition complies with the conditions for granting the application special status pursuant to the "Change to Practice for Petitions in Patent Applications to Make Special and for Accelerated Examination" published June 26, 2006, in the Federal Register. (71 Fed. Reg. 36323).

The prosecution of the instant application will be conducted expeditiously according to the following guidelines.

1. The application will be docketed to an examiner and taken up for action within two weeks of the date of this decision.

2. Restriction Practice:

If the examiner determines that the claims are not directed to a single invention, a telephone request to elect one single invention will be made pursuant to MPEP 812.01. As a prerequisite to the grant of this petition, the applicant has agreed to make an oral election, by telephone, without traverse. If the applicant refuses to make an election without traverse, or the examiner cannot reach the applicant after a reasonable effort, the examiner will treat the first claimed invention (invention defined by claim 1) as having being constructively elected without traverse for examination.

3. Office action:
   If it is determined that, after appropriate consultation, there is a potential rejection or any other issue to be addressed, the examiner will telephone the applicant and arrange an interview to discuss and resolve the issue. An Office action, other than a Notice of Allowance and Fee(s) Due (Notice of Allowance), will not be issued unless either: 1) an interview was conducted but did not result in agreed to action that places the application in condition for allowance, or, 2) a determination is made that an interview would be unlikely to result in the application being placed in condition for allowance, and 3) an internal conference has been held to review any rejection of any claim.

4. Time for Reply:
   An Office action other than a Notice of Allowance or a final Office action will set a shortened statutory period of one month or thirty days, whichever is longer, for reply with no extension of time available under 37 CFR 1.136(a). Failure to timely file a reply within this non-extendible period for reply will result in the abandonment of the application.

5. Reply by Applicant:
   A timely reply to an Office action other than the Notice of Allowance must be submitted electronically via EFS or EFS-web and limited to addressing the rejections, objections and requirement made. Any amendment that attempts to: 1) add claims which would result in more than three pending independent claims or more than twenty pending total claims; 2) present claims not encompassed by the pre-examination search or an updated accelerated examination support document; or 3) present claims that are directed a non-elected invention or an invention other than that previously claimed and examined in the application, will be treated as not fully responsive and will not be entered.

   For any amendment to the claims (including any new claim) that is not encompassed by the accelerated examination support document, applicant must provide an updated accelerated examination support document that encompasses the amended or new claims at the time of filing of the amendment.

   To proceed expeditiously with the examination, it is recommended that a reply with amendments made to any claim or with any new claim being added be accompanied by an updated accelerated examination support document or a statement explaining how the amended or new claim is supported by the original accelerated examination support document.

6. Information Disclosure Statement (IDS):
7. Any IDS filed during prosecution must be submitted electronically via EFS or EFS-web, accompanied by an updated accelerated examination support document, and be in compliance with 37 CFR 1.97 and 1.98.

8. Post-Allowance Processing:
   To expedite processing of the allowed application into a patent, the applicant must: 1) pay the required fees within one month of the date of the Notice of Allowance, and 2) not file any post allowance papers not required by the Office. In no event may the issue fee be paid and accepted later than three months from the date of the Notice of Allowance.

9. After-Final and Appeal Procedures:
   To expedite prosecution, after receiving the final Office action, applicant must: 1) promptly file a notice of appeal, an appeal brief and appeal fees; and 2) not request a pre-appeal brief conference.

   Any amendment, affidavit or other evidence filed after final Office action must comply with applicable rules and the requirements outlined in numbered paragraphs 5 and 6 above.

   On appeal, the application will proceed according to normal appeal procedures. After appeal, the application will again be treated special.

10. Proceedings Outside the Normal Examination Process:
    If the application becomes involved in a proceeding that is outside the normal examination process (e.g., a secrecy order, national security review, interference proceeding, petitions under 37 CFR 1.181, 182 or 183), the application will be treated special before and after such proceeding.

11. Final Disposition:
    The twelve month goal of this accelerated examination procedure ends with a final disposition. The mailing of a final Office action, a Notice of Allowance, the filing of a Notice of Appeal, or the filing of a Request for Continued Examination (RCE) is the final disposition.

If, during prosecution, a paper is not filed electronically using EFS-web, a reply is filed but is not fully responsive, the application is involved in an appeal, or a proceeding outside normal examination process, the application will still be examined expeditiously, however, the final disposition may occur more than twelve months from the filing of the application.

Any inquiry regarding this decision should be directed to Marianne C. Seidel, Quality Assurance Specialist, at (571) 272-0584.

/MC Seidel/
Marianne C. Seidel, Quality Assurance Specialist
Technology Center 1600

UNITED STATES PATENT AND TRADEMARK OFFICE

UNITED STATES DEPARTMENT OF COMMERCE
United States Patent and Trademark Office
Address: COMMISSIONER FOR PATENTS
P.O. Box 1450
Alexandria, Virginia 22313-1450
www.uspto.gov

APPLICATION NO.	FILING DATE	FIRST NAMED INVENTOR	ATTORNEY DOCKET NO.	CONFIRMATION NO.
13/179,319	07/08/2011	Dae Won LEE	8737.00240.US21	1160

30827 7590 08/30/2011
MCKENNA LONG & ALDRIDGE LLP
1900 K STREET, NW
WASHINGTON, DC 20006

EXAMINER	
WU, JIANYE	

ART UNIT	PAPER NUMBER
2462	

MAIL DATE	DELIVERY MODE
08/30/2011	PAPER

Please find below and/or attached an Office communication concerning this application or proceeding.

The time period for reply, if any, is set in the attached communication.

UNITED STATES PATENT AND TRADEMARK OFFICE

Commissioner for Patents
United States Patent and Trademark Office
P.O. Box 1450
Alexandria, VA 22313-1450
www.uspto.gov

MCKENNA LONG & ALDRIDGE LLP
1900 K STREET, NW
WASHINGTON DC 20006

In re Application of: Dae Won Lee
Application No. 13179319
Filed: July 08, 2011
For: **METHOD FOR RECEIVING ACK/NACK SIGNAL IN MOBILE COMMUNICATION SYSTEM**

DECISION ON REQUEST TO PARTICIPATE IN PATENT PROSECUTION HIGHWAY PROGRAM AND PETITION TO MAKE SPECIAL UNDER 37 CFR 1.102(d)

MAILED

[illegible] 30 2011

DIRECTOR OFFICE
TECHNOLOGY CENTER 2400

This is a decision on the request to participate in the Patent Prosecution Highway (PPH) program and the petition under 37 CFR 1.102(d), July 08, 2011, to make the above-identified application special.

The petition is **GRANTED.**

A grantable request to participate in the PPH program and petition to make special require:

(1) The U.S. application is
(a) a Paris Convention application which either
(i) validly claims priority under 35 U.S.C. 119(a) and 37 CFR 1.55 to one or more applications filed in the KIPO, or
(ii) validly claims priority to a PCT application that contains no priority claims,

Or

(b) a national stage application under the PCT (an application which entered the national stage in the U.S. from a PCT international application after compliance with 35 U.S.C. 371), which PCT application
(i) validly claims priority to an application filed in the KIPO, or
(ii) validly claims priority to a PCT application that contains no priority claims, or
(iii) contains no priority claim,

Or

(c) a so-called bypass application filed under 35 U.S.C. 111 (a) which validly claims benefit under 35 U.S.C. 120 to a PCT application, which PCT application
(i) validly claims priority to an application filed in the KIPO, or
(ii) validly claims priority to a PCT application that contains no priority claims, or
(iii) contains no priority claim.

Where the KIPO application that contains the allowable/patentable claims is not the same application for which priority is claimed in the U.S. application, applicant must identify the relationship between the KIPO application that contains the allowable/patentable claims and the KIPO priority application claimed in the U.S. application;

(2) Applicant must submit a copy of:
a. The allowable/patentable claim(s) from the KR application(s);
b. An English translation of the allowable/patentable claim(s), if the claims were published in a language other than English); and
c. A statement that the English translation is accurate;

(3) Applicant must:
a. Ensure all the claims in the U.S. application must sufficiently correspond or be amended to sufficiently correspond to the allowable/patentable claim(s) in the KIPO application(s) and
b. Submit a claim correspondence table in English;

(4) Examination of the U.S. application has not begun;

(5) Applicant must submit:
a. A copy of all the office action(s) (which are relevant to patentability), excluding "Decision to Grant a Patent" from each of the KR application(s) containing the allowable/patentable claim(s);
b. An English language translation of the KIPO office action(s) (if the office action(s) are not in the English language); and
c. A statement that the English translation is accurate;

(6) Applicant must submit:
a. An IDS listing the documents cited by the KIPO examiner in the KIPO office action (unless already filed in this application); and
b. Copies of all the documents cited in the KIPO office action, except U.S. patents or U.S. patent application publications (unless already filed in this application); and

The request to participate in the PPH program and petition are found to comply with all the above requirements. Accordingly, the above-identified application has been accorded "special" status.

Telephone inquiries concerning this decision should be directed to Chau Nguyen at 571-272-3126

All other inquiries concerning the examination or status of the application is accessible in the PAIR system at http://www.uspto.gov/ebc/index.html.

The application is being forwarded to the examiner for action on the merits commensurate with this decision.

/Chau Nguyen/

Chau Nguyen
Quality Assurance Specialist
Technology Center 2400

UNITED STATES PATENT AND TRADEMARK OFFICE

UNITED STATES DEPARTMENT OF COMMERCE
United States Patent and Trademark Office
Address: COMMISSIONER FOR PATENTS
P.O. Box 1450
Alexandria, Virginia 22313-1450
www.uspto.gov

APPLICATION NO.	FILING DATE	FIRST NAMED INVENTOR	ATTORNEY DOCKET NO.	CONFIRMATION NO.
13/179,336	07/08/2011	Michael T. Nordsiek	83136CON11(54610)	1208

21874 7590 07/22/2011
EDWARDS ANGELL PALMER & DODGE LLP
P.O. BOX 55874
BOSTON, MA 02205

EXAMINER	
CARTER, KENDRA D	

ART UNIT	PAPER NUMBER
1627	

MAIL DATE	DELIVERY MODE
07/22/2011	PAPER

Please find below and/or attached an Office communication concerning this application or proceeding.

The time period for reply, if any, is set in the attached communication.

UNITED STATES PATENT AND TRADEMARK OFFICE

Commissioner for Patents
United States Patent and Trademark Office
P.O. Box 1450
Alexandria, VA 22313-1450
www.uspto.gov

JUL 2 2 2011

EDWARDS ANGELL PALMER & DODGE LLP
P.O. BOX 55874
BOSTON MA 02205

In re Application of:
Nordsiek et al.

Serial No.: 13/179,336

Filed: : July 8, 2011

Docket: **83136CON11(54610)**

Title: **UP TO SIX WEEKS TREATMENT REGIMEN FOR TREATING ACTINIC KERATOSES WITH PHARMACEUTICAL COMPOSITIONS FORMULATED WITH 2.5% IMIQUIMOD**

DECISION ON PETITION TO MAKE SPECIAL FOR NEW APPLICATION UNDER 37 C.F.R. § 1.102 & M.P.E.P. § 708.02

This is a decision on the petition July 8, 2011, to make the above-identified application special for accelerated examination procedure under 37 C.F.R. § 1.102(d).

The petition to make the application special is GRANTED.

The application is eligible for accelerated examination and the petition complies with the conditions for granting the application special status pursuant to the "Change to Practice for Petitions in Patent Applications to Make Special and for Accelerated Examination" published June 26, 2006, in the Federal Register. (71 Fed. Reg. 36323).

The prosecution of the instant application will be conducted expeditiously according to the following guidelines.

1. The application will be docketed to an examiner and taken up for action within two weeks of the date of this decision.

2. Restriction Practice:

Best Available Copy

If the examiner determines that the claims are not directed to a single invention, a telephone request to elect one single invention will be made pursuant to MPEP 812.01. As a prerequisite to the grant of this petition, the applicant has agreed to make an oral election, by telephone, without traverse. If the applicant refuses to make an election without traverse, or the examiner cannot reach the applicant after a reasonable effort, the examiner will treat the first claimed invention (invention defined by claim 1) as having being constructively elected without traverse for examination.

3. Office action:
If it is determined that, after appropriate consultation, there is a potential rejection or any other issue to be addressed, the examiner will telephone the applicant and arrange an interview to discuss and resolve the issue. An Office action, other than a Notice of Allowance and Fee(s) Due (Notice of Allowance), will not be issued unless either: 1) an interview was conducted but did not result in agreed to action that places the application in condition for allowance, or, 2) a determination is made that an interview would be unlikely to result in the application being placed in condition for allowance, and 3) an internal conference has been held to review any rejection of any claim.

4. Time for Reply:
An Office action other than a Notice of Allowance or a final Office action will set a shortened statutory period of one month or thirty days, whichever is longer, for reply with no extension of time available under 37 CFR 1.136(a). Failure to timely file a reply within this non-extendible period for reply will result in the abandonment of the application.

5. Reply by Applicant:
A timely reply to an Office action other than the Notice of Allowance must be submitted electronically via EFS or EFS-web and limited to addressing the rejections, objections and requirement made. Any amendment that attempts to: 1) add claims which would result in more than three pending independent claims or more than twenty pending total claims; 2) present claims not encompassed by the pre-examination search or an updated accelerated examination support document; or 3) present claims that are directed a non-elected invention or an invention other than that previously claimed and examined in the application, will be treated as not fully responsive and will not be entered.

For any amendment to the claims (including any new claim) that is not encompassed by the accelerated examination support document, applicant must provide an updated accelerated examination support document that encompasses the amended or new claims at the time of filing of the amendment.

To proceed expeditiously with the examination, it is recommended that a reply with amendments made to any claim or with any new claim being added be accompanied by an updated accelerated examination support document or a statement explaining how the amended or new claim is supported by the original accelerated examination support document.

6. Information Disclosure Statement (IDS):
7. Any IDS filed during prosecution must be submitted electronically via EFS or EFS-web, accompanied by an updated accelerated examination support document, and be in compliance with 37 CFR 1.97 and 1.98.

8. Post-Allowance Processing:
   To expedite processing of the allowed application into a patent, the applicant must: 1) pay the required fees within one month of the date of the Notice of Allowance, and 2) not file any post allowance papers not required by the Office. In no event may the issue fee be paid and accepted later than three months from the date of the Notice of Allowance.

9. After-Final and Appeal Procedures:
   To expedite prosecution, after receiving the final Office action, applicant must: 1) promptly file a notice of appeal, an appeal brief and appeal fees; and 2) not request a pre-appeal brief conference.

   Any amendment, affidavit or other evidence filed after final Office action must comply with applicable rules and the requirements outlined in numbered paragraphs 5 and 6 above.

   On appeal, the application will proceed according to normal appeal procedures. After appeal, the application will again be treated special.

10. Proceedings Outside the Normal Examination Process:
    If the application becomes involved in a proceeding that is outside the normal examination process (e.g., a secrecy order, national security review, interference proceeding, petitions under 37 CFR 1.181, 182 or 183), the application will be treated special before and after such proceeding.

11. Final Disposition:
    The twelve month goal of this accelerated examination procedure ends with a final disposition. The mailing of a final Office action, a Notice of Allowance, the filing of a Notice of Appeal, or the filing of a Request for Continued Examination (RCE) is the final disposition.

If, during prosecution, a paper is not filed electronically using EFS-web, a reply is filed but is not fully responsive, the application is involved in an appeal, or a proceeding outside normal examination process, the application will still be examined expeditiously, however, the final disposition may occur more than twelve months from the filing of the application.

Any inquiry regarding this decision should be directed to Marianne C. Seidel, Quality Assurance Specialist, at (571) 272-0584.

/MC Seidel/
Marianne C. Seidel, Quality Assurance Specialist
Technology Center 1600

UNITED STATES PATENT AND TRADEMARK OFFICE

UNITED STATES DEPARTMENT OF COMMERCE
United States Patent and Trademark Office
Address: COMMISSIONER FOR PATENTS
P.O. Box 1450
Alexandria, Virginia 22313-1450
www.uspto.gov

APPLICATION NO.	FILING DATE	FIRST NAMED INVENTOR	ATTORNEY DOCKET NO.	CONFIRMATION NO.
13/179,363	07/08/2011	Michael T. Nordsick	83136CON10(54610)	1268

21874 7590 07/15/2011

EDWARDS ANGELL PALMER & DODGE LLP
P.O. BOX 55874
BOSTON, MA 02205

EXAMINER	
ART UNIT	PAPER NUMBER
1629	

MAIL DATE	DELIVERY MODE
07/15/2011	PAPER

Please find below and/or attached an Office communication concerning this application or proceeding.

The time period for reply, if any, is set in the attached communication.

UNITED STATES PATENT AND TRADEMARK OFFICE

JUL 15 2011

Commissioner for Patents
United States Patent and Trademark Office
P.O. Box 1450
Alexandria, VA 22313-1450
www.uspto.gov

EDWARDS ANGELL PALMER & DODGE LLP
P.O. BOX 55874
BOSTON MA 02205

In re Application of:
Nordsiek et al.

Serial No.: 13/179,363

Filed: : July 8, 2011

Docket: **83136CON10(54610)**

Title: **3 X 3 X 3 WEEK TREATMENT REGIMEN FOR TREATING ACTINIC KERATOSIS WITH PHARMACEUTICAL COMPOSITIONS FORMULATED WITH 2.5% IMIQUIMOD**

DECISION ON PETITION TO MAKE SPECIAL FOR NEW APPLICATION UNDER 37 C.F.R. § 1.102 & M.P.E.P. § 708.02

This is a decision on the petition July 8, 2011, to make the above-identified application special for accelerated examination procedure under 37 C.F.R. § 1.102(d).

The petition to make the application special is GRANTED.

The application is eligible for accelerated examination and the petition complies with the conditions for granting the application special status pursuant to the "Change to Practice for Petitions in Patent Applications to Make Special and for Accelerated Examination" published June 26, 2006, in the Federal Register. (71 Fed. Reg. 36323).

The prosecution of the instant application will be conducted expeditiously according to the following guidelines.

1. The application will be docketed to an examiner and taken up for action within two weeks of the date of this decision.

2. Restriction Practice:
   If the examiner determines that the claims are not directed to a single invention, a telephone request to elect one single invention will be made pursuant to MPEP 812.01.

As a prerequisite to the grant of this petition, the applicant has agreed to make an oral election, by telephone, without traverse. If the applicant refuses to make an election without traverse, or the examiner cannot reach the applicant after a reasonable effort, the examiner will treat the first claimed invention (invention defined by claim 1) as having being constructively elected without traverse for examination.

3. Office action:
   If it is determined that, after appropriate consultation, there is a potential rejection or any other issue to be addressed, the examiner will telephone the applicant and arrange an interview to discuss and resolve the issue. An Office action, other than a Notice of Allowance and Fee(s) Due (Notice of Allowance), will not be issued unless either: 1) an interview was conducted but did not result in agreed to action that places the application in condition for allowance, or, 2) a determination is made that an interview would be unlikely to result in the application being placed in condition for allowance, and 3) an internal conference has been held to review any rejection of any claim.

4. Time for Reply:
   An Office action other than a Notice of Allowance or a final Office action will set a shortened statutory period of one month or thirty days, whichever is longer, for reply with no extension of time available under 37 CFR 1.136(a). Failure to timely file a reply within this non-extendible period for reply will result in the abandonment of the application.

5. Reply by Applicant:
   A timely reply to an Office action other than the Notice of Allowance must be submitted electronically via EFS or EFS-web and limited to addressing the rejections, objections and requirement made. Any amendment that attempts to: 1) add claims which would result in more than three pending independent claims or more than twenty pending total claims; 2) present claims not encompassed by the pre-examination search or an updated accelerated examination support document; or 3) present claims that are directed a non-elected invention or an invention other than that previously claimed and examined in the application, will be treated as not fully responsive and will not be entered.

   For any amendment to the claims (including any new claim) that is not encompassed by the accelerated examination support document, applicant must provide an updated accelerated examination support document that encompasses the amended or new claims at the time of filing of the amendment.

   To proceed expeditiously with the examination, it is recommended that a reply with amendments made to any claim or with any new claim being added be accompanied by an updated accelerated examination support document or a statement explaining how the amended or new claim is supported by the original accelerated examination support document.

6. Information Disclosure Statement (IDS):

7. Any IDS filed during prosecution must be submitted electronically via EFS or EFS-web, accompanied by an updated accelerated examination support document, and be in compliance with 37 CFR 1.97 and 1.98.

8. Post-Allowance Processing:
   To expedite processing of the allowed application into a patent, the applicant must: 1) pay the required fees within one month of the date of the Notice of Allowance, and 2) not file any post allowance papers not required by the Office. In no event may the issue fee be paid and accepted later than three months from the date of the Notice of Allowance.

9. After-Final and Appeal Procedures:
   To expedite prosecution, after receiving the final Office action, applicant must: 1) promptly file a notice of appeal, an appeal brief and appeal fees; and 2) not request a pre-appeal brief conference.

   Any amendment, affidavit or other evidence filed after final Office action must comply with applicable rules and the requirements outlined in numbered paragraphs 5 and 6 above.

   On appeal, the application will proceed according to normal appeal procedures. After appeal, the application will again be treated special.

10. Proceedings Outside the Normal Examination Process:
    If the application becomes involved in a proceeding that is outside the normal examination process (e.g., a secrecy order, national security review, interference proceeding, petitions under 37 CFR 1.181, 182 or 183), the application will be treated special before and after such proceeding.

11. Final Disposition:
    The twelve month goal of this accelerated examination procedure ends with a final disposition. The mailing of a final Office action, a Notice of Allowance, the filing of a Notice of Appeal, or the filing of a Request for Continued Examination (RCE) is the final disposition.

If, during prosecution, a paper is not filed electronically using EFS-web, a reply is filed but is not fully responsive, the application is involved in an appeal, or a proceeding outside normal examination process, the application will still be examined expeditiously, however, the final disposition may occur more than twelve months from the filing of the application.

Any inquiry regarding this decision should be directed to Marianne C. Seidel, Quality Assurance Specialist, at (571) 272-0584.

/MC Seidel/
Marianne C. Seidel, Quality Assurance Specialist
Technology Center 1600

UNITED STATES PATENT AND TRADEMARK OFFICE

UNITED STATES DEPARTMENT OF COMMERCE
United States Patent and Trademark Office
Address: COMMISSIONER FOR PATENTS
P.O. Box 1450
Alexandria, Virginia 22313-1450
www.uspto.gov

APPLICATION NO.	FILING DATE	FIRST NAMED INVENTOR	ATTORNEY DOCKET NO.	CONFIRMATION NO.
13/179,402	07/08/2011	Michael T. Nordsiek	83136CON9(54610)	1345

21874 7590 08/10/2011

EDWARDS ANGELL PALMER & DODGE LLP
P.O. BOX 55874
BOSTON, MA 02205

EXAMINER	
CARTER, KENDRA D	
ART UNIT	PAPER NUMBER
1627	
MAIL DATE	DELIVERY MODE
08/10/2011	PAPER

Please find below and/or attached an Office communication concerning this application or proceeding.

The time period for reply, if any, is set in the attached communication.

UNITED STATES PATENT AND TRADEMARK OFFICE

Commissioner for Patents
United States Patent and Trademark Office
P.O. Box 1450
Alexandria, VA 22313-1450
www.uspto.gov

AUG 1 0 2011

EDWARDS ANGELL PALMER & DODGE LLP
P.O. BOX 55874
BOSTON MA 02205

In re Application of:
Nordsiek et al.
Serial No.: 13/179,402
Filed: : July 8, 2011
Docket: **83136CON9(54610)**

Title: **LOWER DOSAGE STRENGTH PHARMACEUTICAL COMPOSITIONS FORMULATED WITH 2.5% IMIQUIMOD**

DECISION ON PETITION TO MAKE SPECIAL FOR NEW APPLICATION UNDER 37 C.F.R. § 1.102 & M.P.E.P. § 708.02

This is a decision on the petition July 8, 2011, to make the above-identified application special for accelerated examination procedure under 37 C.F.R. § 1.102(d).

The petition to make the application special is GRANTED.

The application is eligible for accelerated examination and the petition complies with the conditions for granting the application special status pursuant to the "Change to Practice for Petitions in Patent Applications to Make Special and for Accelerated Examination" published June 26, 2006, in the Federal Register. (71 Fed. Reg. 36323).

The prosecution of the instant application will be conducted expeditiously according to the following guidelines.

1. The application will be docketed to an examiner and taken up for action within two weeks of the date of this decision.

2. Restriction Practice:
   If the examiner determines that the claims are not directed to a single invention, a telephone request to elect one single invention will be made pursuant to MPEP 812.01. As a prerequisite to the grant of this petition, the applicant has agreed to make an oral election, by telephone, without traverse. If the applicant refuses to make an election without traverse, or the examiner cannot reach the applicant after a reasonable effort, the

examiner will treat the first claimed invention (invention defined by claim 1) as having being constructively elected without traverse for examination.

3. Office action:
   If it is determined that, after appropriate consultation, there is a potential rejection or any other issue to be addressed, the examiner will telephone the applicant and arrange an interview to discuss and resolve the issue. An Office action, other than a Notice of Allowance and Fee(s) Due (Notice of Allowance), will not be issued unless either: 1) an interview was conducted but did not result in agreed to action that places the application in condition for allowance, or, 2) a determination is made that an interview would be unlikely to result in the application being placed in condition for allowance, and 3) an internal conference has been held to review any rejection of any claim.

4. Time for Reply:
   An Office action other than a Notice of Allowance or a final Office action will set a shortened statutory period of one month or thirty days, whichever is longer, for reply with no extension of time available under 37 CFR 1.136(a). Failure to timely file a reply within this non-extendible period for reply will result in the abandonment of the application.

5. Reply by Applicant:
   A timely reply to an Office action other than the Notice of Allowance must be submitted electronically via EFS or EFS-web and limited to addressing the rejections, objections and requirement made. Any amendment that attempts to: 1) add claims which would result in more than three pending independent claims or more than twenty pending total claims; 2) present claims not encompassed by the pre-examination search or an updated accelerated examination support document; or 3) present claims that are directed a non-elected invention or an invention other than that previously claimed and examined in the application, will be treated as not fully responsive and will not be entered.

   For any amendment to the claims (including any new claim) that is not encompassed by the accelerated examination support document, applicant must provide an updated accelerated examination support document that encompasses the amended or new claims at the time of filing of the amendment.

   To proceed expeditiously with the examination, it is recommended that a reply with amendments made to any claim or with any new claim being added be accompanied by an updated accelerated examination support document or a statement explaining how the amended or new claim is supported by the original accelerated examination support document.

6. Information Disclosure Statement (IDS):
7. Any IDS filed during prosecution must be submitted electronically via EFS or EFS-web, accompanied by an updated accelerated examination support document, and be in compliance with 37 CFR 1.97 and 1.98.

8. Post-Allowance Processing:
   To expedite processing of the allowed application into a patent, the applicant must: 1) pay the required fees within one month of the date of the Notice of Allowance, and 2) not file any post allowance papers not required by the Office. In no event may the issue fee be paid and accepted later than three months from the date of the Notice of Allowance.

9. After-Final and Appeal Procedures:
   To expedite prosecution, after receiving the final Office action, applicant must: 1) promptly file a notice of appeal, an appeal brief and appeal fees; and 2) not request a pre-appeal brief conference.

   Any amendment, affidavit or other evidence filed after final Office action must comply with applicable rules and the requirements outlined in numbered paragraphs 5 and 6 above.

   On appeal, the application will proceed according to normal appeal procedures. After appeal, the application will again be treated special.

10. Proceedings Outside the Normal Examination Process:
    If the application becomes involved in a proceeding that is outside the normal examination process (e.g., a secrecy order, national security review, interference proceeding, petitions under 37 CFR 1.181, 182 or 183), the application will be treated special before and after such proceeding.

11. Final Disposition:
    The twelve month goal of this accelerated examination procedure ends with a final disposition. The mailing of a final Office action, a Notice of Allowance, the filing of a Notice of Appeal, or the filing of a Request for Continued Examination (RCE) is the final disposition.

If, during prosecution, a paper is not filed electronically using EFS-web, a reply is filed but is not fully responsive, the application is involved in an appeal, or a proceeding outside normal examination process, the application will still be examined expeditiously, however, the final disposition may occur more than twelve months from the filing of the application.

Any inquiry regarding this decision should be directed to Marianne C. Seidel, Quality Assurance Specialist, at (571) 272-0584.

/MC Seidel/
Marianne C. Seidel, Quality Assurance Specialist
Technology Center 1600

UNITED STATES PATENT AND TRADEMARK OFFICE

Commissioner for Patents
United States Patent and Trademark Office
P.O. Box 1450
Alexandria, VA 22313-1450
www.uspto.gov

MARC E. HANKIN, ESQ.
11414 THURSTON CIRCLE
LOS ANGELES CA 90049

MAILED
JUL 26 2011
OFFICE OF PETITIONS

In re Application of :
Dan Nicolaus Costas :
Application No. 13/179,446 : ON PETITION
Filed: July 8, 2011
Attorney Docket No. Costas-Drag-CIP :
:

This is a decision on the petition under 37 CFR 1.102(c)(1), filed July 8, 2011, to make the above-identified application special based on applicant's age as set forth in M.P.E.P. § 708.02, Section IV.

The petition is **GRANTED**.

A grantable petition to make an application special under 37 CFR 1.102(c)(1) and MPEP § 708.02, Section IV: Applicant's Age must be accompanied by evidence showing that at least one of the applicants is 65 years of age, or more, such as a birth certificate or a statement by applicant. No fee is required

The instant petition includes a statement (PTO/SB/130 form) by the applicant's attorney that applicant is 65 years of age. Accordingly, the above-identified application has been accorded "special" status.

Telephone inquiries concerning this decision should be directed to the undersigned at 571-272-7751. All other inquiries concerning either the examination or status of the application should be directed to the Technology Center.

This matter is being referred to the Technology Center Art Unit 3617 for action on the merits commensurate with this decision.

/Joan Olszewski/
Joan Olszewski
Petitions Examiner
Office of Petitions

UNITED STATES PATENT AND TRADEMARK OFFICE

Commissioner for Patents
United States Patent and Trademark Office
P.O. Box 1450
Alexandria, VA 22313-1450
www.uspto.gov

MAILED
NOV 15 2011
OFFICE OF PETITIONS

DELPHINE M. JAMES
2656 SOUTH LOOP WEST #170
HOUSTON TX 77054

In re Application of
Catherine McCarthy
Application No. 13/179,465
Filed: July 8, 2011
Attorney Docket No.

DECISION ON PETITION
TO MAKE SPECIAL UNDER
37 CFR 1.102(c)(1)

This is a decision on the petition under 37 CFR 1.102(c)(1), filed October 26, 2011, to make the above-identified application special based on applicant's age as set forth in M.P.E.P. § 708.02, Section IV.

The petition is **DISMISSED.**

A grantable petition to make an application special under 37 CFR 1.102(c)(1) and MPEP § 708.02, Section IV: Applicant's Age, must be accompanied by evidence showing that at least one of the applicants is 65 years of age, or more, such as a birth certificate or a statement by applicant. No fee is required.

The instant petition does not include proper identification of the inventor.

The birth certificate submitted with the petition lists the name of Katherine Novak. The name of record in this application is Catherine McCarthy. Clarification is needed regarding the name change, if applicable (i.e. marriage, court order).

Petitioner/applicant is cautioned to avoid submitting personal information in documents filed in a patent application that may contribute to identity theft. Personal information such as social security numbers, bank account numbers, or credit card numbers (other than a check or credit card authorization form PTO-2038 submitted for payment purposes) is never required by the USPTO to support a petition or an application. If this type of personal information is included in documents submitted to the USPTO, petitioners/applicants should consider redacting such personal information from the documents before submitting them to the USPTO. Petitioner/applicant is advised that the record of a patent application is available to the public after publication of the application (unless a non-publication request in compliance with 37 CFR 1.213(a) is made in the application) or issuance of a patent. Furthermore, the record from an abandoned application may also be available to the public if the application is referenced in a published application or an issued patent (see 37 CFR 1.14).

Further correspondence with respect to this matter should be addressed as follows:

By Mail: Mail Stop PETITION
Commissioner for Patents
P. O. Box 1450
Alexandria, VA 22313-1450

By hand: U. S. Patent and Trademark Office
Customer Service Window, Mail Stop Petitions
Randolph Building
401 Dulany Street
Alexandria, VA 22314

By FAX: (571) 273-8300

Telephone inquiries concerning this decision should be directed to Kimberly Inabinet at 571-272-4618.

All other inquiries concerning either the examination or status of the application should be directed to the Technology Center.

The application is being forwarded to the Office of Data Management for action in its regular turn.

/Kimberly Inabinet/
Kimberly Inabinet
Petitions Examiner
Office of Petitions

UNITED STATES PATENT AND TRADEMARK OFFICE

Commissioner for Patents
United States Patent and Trademark Office
P.O. Box 1450
Alexandria, VA 22313-1450
www.uspto.gov

KAMILO FEHER
44685 COUNTRY CLUB DRIVE
EL MACERO, CA 95618

MAILED

AUG 04 2011

OFFICE OF PETITIONS

In re Application of

Kamilo Feher
Application No. 13/179,545
Filed: July 10, 2011
Attorney Docket No. TVMOBINT 05 set

DECISION ON PETITION
TO MAKE SPECIAL UNDER
37 CFR 1.102(c)(1)

This is a decision on the petition under 37 CFR 1.102(c)(1), filed July 10, 2011, to make the above-identified application special based on applicant's age as set forth in M.P.E.P. § 708.02, Section IV.

The petition is **GRANTED**.

A grantable petition to make an application special under 37 CFR 1.102(c)(1) and MPEP § 708.02, Section IV: Applicant's Age must be accompanied by evidence showing that at least one of the applicants is 65 years of age, or more, such as a birth certificate or a statement by applicant. No fee is required

The instant petition includes a statement signed by applicant. Accordingly, the above-identified application has been accorded "special" status.

Telephone inquiries concerning this decision should be directed to undersigned at 571-272-1642.

All other inquiries concerning either the examination or status of the application should be directed to the Technology Center.

The application is being forwarded to the Technology Center Art Unit 2611 for action on the merits commensurate with this decision.

/AMW/
April M. Wise
Petitions Examiner
Office of Petitions

UNITED STATES PATENT AND TRADEMARK OFFICE

UNITED STATES DEPARTMENT OF COMMERCE
United States Patent and Trademark Office
Address: COMMISSIONER FOR PATENTS
P.O. Box 1450
Alexandria, Virginia 22313-1450
www.uspto.gov

APPLICATION NO.	FILING DATE	FIRST NAMED INVENTOR	ATTORNEY DOCKET NO.	CONFIRMATION NO.
13/179,556		SANG BUM YUN	A2-1650	1772

61174 7590 07/18/2011

MAXON IP LLC
46175 WESTLAKE DR.
SUITE 410
POTOMAC FALLS, VA 20165

EXAMINER	
ART UNIT	PAPER NUMBER
3715	

NOTIFICATION DATE	DELIVERY MODE
07/18/2011	ELECTRONIC

Please find below and/or attached an Office communication concerning this application or proceeding.

The time period for reply, if any, is set in the attached communication.

Notice of the Office communication was sent electronically on above-indicated "Notification Date" to the following e-mail address(es):

Justin.kim@maxonip.com
kimcho1010@yahoo.com
INFO@MAXONIP.COM

UNITED STATES PATENT AND TRADEMARK OFFICE

Commissioner for Patents
United States Patent and Trademark Office
P.O. Box 1450
Alexandria, VA 22313-1450
www.uspto.gov

MAXON IP LLC
46175 WESTLAKE DR.
SUITE 410
POTOMAC FALLS VA 20165

In re Application of:
YUN, SANG BUM
Serial No.: 13/179556
Filed: July 10, 2011
Attorney Docket No. : A2-1650
Title: SYSTEM AND METHOD FOR CYBER TRAINING OF MARTIAL ART ON NETWORK

DECISION ON A REQUEST TO PARTICIPATE IN PATENT PROSECUTION HIGHWAY PROGRAM AND PETITION TO MAKE SPECIAL UNDER CFR 1.102(a)

This is a decision on the request to participate in the Patent Prosecution Highway (PPH) program and the petition under 37 CFR 1.102(a), filed July 11, 2011 to make the above-identified application special.

The request and petition are **granted.**

A grantable request to participate in the PPH program and petition to make special require:

(1) The U.S. application must validly claim priority under 35 U.S.C. 119(a) to one or more corresponding application(s) filed in the KIPO;
(2) Applicant must submit a copy of the allowable/patentable claim(s) from the KIPO application(s) along with an English translation thereof and a statement that the English translation is accurate;
(3) All the claims in the U.S. application must sufficiently correspond or be amended to sufficiently correspond to the allowable/patentable claim(s) in the KIPO application(s);
(4) Examination of the U.S. application has not begun;
(5) Applicant must submit a copy of all the office actions from each of the KIPO application(s) containing the allowable/patentable claim(s) along with an English translation thereof and a statement that the English translation is accurate; and
(6) Applicant must submit IDS listing the documents cited by the KIPO examiner in the KIPO office action along with copies of documents except U.S. patents or U.S. patent application publications.

In light of the petition being properly submitted, the request to participate in the PPH program and the petition comply with the above requirements. Accordingly, the above-identified application has been accorded "special" status.

The applicant is encouraged to cite and submit all relevant prior art references, if any, to facilitate examination in this application.

Response must be filed via EFS-Web. Telephone inquiries concerning this decision should be directed to Henry C. Yuen, at 571-272-4856.

Petition is **granted**.

/Henry C. Yuen/

Henry C. Yuen
Special Programs Examiner
Technology Center 3700
Tel: 571-272-4856

UNITED STATES PATENT AND TRADEMARK OFFICE

UNITED STATES DEPARTMENT OF COMMERCE
United States Patent and Trademark Office
Address: COMMISSIONER FOR PATENTS
P.O. Box 1450
Alexandria, Virginia 22313-1450
www.uspto.gov

APPLICATION NO.	FILING DATE	FIRST NAMED INVENTOR	ATTORNEY DOCKET NO.	CONFIRMATION NO.
13/179,560		SANG BUM YUN	A2-1750	1784

61174 7590 07/18/2011

MAXON IP LLC
46175 WESTLAKE DR.
SUITE 410
POTOMAC FALLS, VA 20165

EXAMINER	
ART UNIT	PAPER NUMBER
3764	

NOTIFICATION DATE	DELIVERY MODE
07/18/2011	ELECTRONIC

Please find below and/or attached an Office communication concerning this application or proceeding.

The time period for reply, if any, is set in the attached communication.

Notice of the Office communication was sent electronically on above-indicated "Notification Date" to the following e-mail address(es):

Justin.kim@maxonip.com
kimcho1010@yahoo.com
INFO@MAXONIP.COM

UNITED STATES PATENT AND TRADEMARK OFFICE

Commissioner for Patents
United States Patent and Trademark Office
P.O. Box 1450
Alexandria, VA 22313-1450
www.uspto.gov

MAXON IP LLC
46175 WESTLAKE DR.
SUITE 410
POTOMAC FALLS VA 20165

In re Application of:
YUN, SANG BUM
Serial No.: 13/179560
Filed: July 10, 2011
Attorney Docket No. : A2-1750
Title: SYSTEM AND METHOD FOR CYBER TRAINING OF MARTIAL ART ON NETWORK

DECISION ON A REQUEST TO PARTICIPATE IN PATENT PROSECUTION HIGHWAY PROGRAM AND PETITION TO MAKE SPECIAL UNDER CFR 1.102(a)

This is a decision on the request to participate in the Patent Prosecution Highway (PPH) program and the petition under 37 CFR 1.102(a), filed July 11, 2011 to make the above-identified application special.

The request and petition are **granted.**

A grantable request to participate in the PPH program and petition to make special require:

(1) The U.S. application must validly claim priority under 35 U.S.C. 119(a) to one or more corresponding application(s) filed in the KIPO;
(2) Applicant must submit a copy of the allowable/patentable claim(s) from the KIPO application(s) along with an English translation thereof and a statement that the English translation is accurate;
(3) All the claims in the U.S. application must sufficiently correspond or be amended to sufficiently correspond to the allowable/patentable claim(s) in the KIPO application(s);
(4) Examination of the U.S. application has not begun;
(5) Applicant must submit a copy of all the office actions from each of the KIPO application(s) containing the allowable/patentable claim(s) along with an English translation thereof and a statement that the English translation is accurate; and
(6) Applicant must submit IDS listing the documents cited by the KIPO examiner in the KIPO office action along with copies of documents except U.S. patents or U.S. patent application publications.

In light of the petition being properly submitted, the request to participate in the PPH program and the petition comply with the above requirements. Accordingly, the above-identified application has been accorded "special" status.

The applicant is encouraged to cite and submit all relevant prior art references, if any, to facilitate examination in this application.

Response must be filed via EFS-Web. Telephone inquiries concerning this decision should be directed to Henry C. Yuen, at 571-272-4856.

Petition is **granted**.

/Henry C. Yuen/

Henry C. Yuen
Special Programs Examiner
Technology Center 3700
Tel: 571-272-4856

UNITED STATES PATENT AND TRADEMARK OFFICE

UNITED STATES DEPARTMENT OF COMMERCE
United States Patent and Trademark Office
Address: COMMISSIONER FOR PATENTS
P.O. Box 1450
Alexandria, Virginia 22313-1450
www.uspto.gov

APPLICATION NO.	FILING DATE	FIRST NAMED INVENTOR	ATTORNEY DOCKET NO.	CONFIRMATION NO.
13/179,590	07/11/2011	Bing Lou WONG	P3323US04	1847

95527 7590 08/10/2011

Ella Cheong Hong Kong
5001 Hopewell Centre, 183 Queen's Road East,
Wan Chai,
HONG KONG

EXAMINER	
ART UNIT	PAPER NUMBER
1654	

NOTIFICATION DATE	DELIVERY MODE
08/10/2011	ELECTRONIC

Please find below and/or attached an Office communication concerning this application or proceeding.

The time period for reply, if any, is set in the attached communication.

Notice of the Office communication was sent electronically on above-indicated "Notification Date" to the following e-mail address(es):

mburke@ellacheong.com
syip@ellacheong.com
ewong@ellacheong.com

AUG 1 0 2011

UNITED STATES PATENT AND TRADEMARK OFFICE

Commissioner for Patents
United States Patent and Trademark Office
P.O. Box 1450
Alexandria, VA 22313-1450
www.uspto.gov

Ella Cheong Hong Kong
5001 Hopewell Centre, 183 Queen's Road East,
Wan Chai HK HONG KONG

In re Application of:
Wong et al.

Serial No.: 13/179,590

Filed: July 11, 2011

Docket: **P3323US04**

DECISION ON PETITION TO MAKE SPECIAL FOR NEW APPLICATION UNDER 37 C.F.R. § 1.102 & M.P.E.P. § 708.02

Title: **TREATMENT METHODS USING A HEAT STABLE OXYGEN CARRIER-CONTAINING PHARMACEUTICAL COMPOSITION**

This is a decision on the petition filed July 11, 2011, to make the above-identified application special for accelerated examination procedure under 37 C.F.R. § 1.102(d).

The petition to make the application special is GRANTED.

The application is eligible for accelerated examination and the petition complies with the conditions for granting the application special status pursuant to the "Change to Practice for Petitions in Patent Applications to Make Special and for Accelerated Examination" published June 26, 2006, in the Federal Register. (71 Fed. Reg. 36323).

The prosecution of the instant application will be conducted expeditiously according to the following guidelines.

1. The application will be docketed to an examiner and taken up for action within two weeks of the date of this decision.

2. Restriction Practice:
If the examiner determines that the claims are not directed to a single invention, a telephone request to elect one single invention will be made pursuant to MPEP 812.01. As a prerequisite to the grant of this petition, the applicant has agreed to make an oral election, by telephone, without traverse. If the applicant refuses to make an election

without traverse, or the examiner cannot reach the applicant after a reasonable effort, the examiner will treat the first claimed invention (invention defined by claim 1) as having being constructively elected without traverse for examination.

3. Office action:
   If it is determined that, after appropriate consultation, there is a potential rejection or any other issue to be addressed, the examiner will telephone the applicant and arrange an interview to discuss and resolve the issue. An Office action, other than a Notice of Allowance and Fee(s) Due (Notice of Allowance), will not be issued unless either: 1) an interview was conducted but did not result in agreed to action that places the application in condition for allowance, or, 2) a determination is made that an interview would be unlikely to result in the application being placed in condition for allowance, and 3) an internal conference has been held to review any rejection of any claim.

4. Time for Reply:
   An Office action other than a Notice of Allowance or a final Office action will set a shortened statutory period of one month or thirty days, whichever is longer, for reply with no extension of time available under 37 CFR 1.136(a). Failure to timely file a reply within this non-extendible period for reply will result in the abandonment of the application.

5. Reply by Applicant:
   A timely reply to an Office action other than the Notice of Allowance must be submitted electronically via EFS or EFS-web and limited to addressing the rejections, objections and requirement made. Any amendment that attempts to: 1) add claims which would result in more than three pending independent claims or more than twenty pending total claims; 2) present claims not encompassed by the pre-examination search or an updated accelerated examination support document; or 3) present claims that are directed a non-elected invention or an invention other than that previously claimed and examined in the application, will be treated as not fully responsive and will not be entered.

   For any amendment to the claims (including any new claim) that is not encompassed by the accelerated examination support document, applicant must provide an updated accelerated examination support document that encompasses the amended or new claims at the time of filing of the amendment.

   To proceed expeditiously with the examination, it is recommended that a reply with amendments made to any claim or with any new claim being added be accompanied by an updated accelerated examination support document or a statement explaining how the amended or new claim is supported by the original accelerated examination support document.
6. Information Disclosure Statement (IDS):
7. Any IDS filed during prosecution must be submitted electronically via EFS or EFS-web, accompanied by an updated accelerated examination support document, and be in compliance with 37 CFR 1.97 and 1.98.

8. Post-Allowance Processing:
   To expedite processing of the allowed application into a patent, the applicant must: 1) pay the required fees within one month of the date of the Notice of Allowance, and 2) not file any post allowance papers not required by the Office. In no event may the issue fee be paid and accepted later than three months from the date of the Notice of Allowance.

9. After-Final and Appeal Procedures:
   To expedite prosecution, after receiving the final Office action, applicant must: 1) promptly file a notice of appeal, an appeal brief and appeal fees; and 2) not request a pre-appeal brief conference.

   Any amendment, affidavit or other evidence filed after final Office action must comply with applicable rules and the requirements outlined in numbered paragraphs 5 and 6 above.

   On appeal, the application will proceed according to normal appeal procedures. After appeal, the application will again be treated special.

10. Proceedings Outside the Normal Examination Process:
    If the application becomes involved in a proceeding that is outside the normal examination process (e.g., a secrecy order, national security review, interference proceeding, petitions under 37 CFR 1.181, 182 or 183), the application will be treated special before and after such proceeding.

11. Final Disposition:
    The twelve month goal of this accelerated examination procedure ends with a final disposition. The mailing of a final Office action, a Notice of Allowance, the filing of a Notice of Appeal, or the filing of a Request for Continued Examination (RCE) is the final disposition.

If, during prosecution, a paper is not filed electronically using EFS-web, a reply is filed but is not fully responsive, the application is involved in an appeal, or a proceeding outside normal examination process, the application will still be examined expeditiously, however, the final disposition may occur more than twelve months from the filing of the application.

Any inquiry regarding this decision should be directed to Marianne C. Seidel, Quality Assurance Specialist, at (571) 272-0584.

/MC Seidel/
Marianne C. Seidel, Quality Assurance Specialist
Technology Center 1600

UNITED STATES PATENT AND TRADEMARK OFFICE

UNITED STATES DEPARTMENT OF COMMERCE
United States Patent and Trademark Office
Address: COMMISSIONER FOR PATENTS
P.O. Box 1450
Alexandria, Virginia 22313-1450
www.uspto.gov

APPLICATION NO.	FILING DATE	FIRST NAMED INVENTOR	ATTORNEY DOCKET NO.	CONFIRMATION NO.
13/179,590	07/11/2011	Bing Lou WONG	P3323US04	1847

95527 7590 09/14/2011

Ella Cheong Hong Kong
5001 Hopewell Centre, 183 Queen's Road East,
Wan Chai,
HONG KONG

EXAMINER	
BRADLEY, CHRISTINA	

ART UNIT	PAPER NUMBER
1654	

NOTIFICATION DATE	DELIVERY MODE
09/14/2011	ELECTRONIC

Please find below and/or attached an Office communication concerning this application or proceeding.

The time period for reply, if any, is set in the attached communication.

Notice of the Office communication was sent electronically on above-indicated "Notification Date" to the following e-mail address(es):

mburke@ellacheong.com
syip@ellacheong.com
ewong@ellacheong.com

UNITED STATES PATENT AND TRADEMARK OFFICE

Commissioner for Patents
United States Patent and Trademark Office
P.O. Box 1450
Alexandria, VA 22313-1450
www.uspto.gov

95527
Ella Cheong Hong Kong
5001 Hopewell Centre, 183 Queen's Road East,
Wan Chai
Hong Kong

In re Application of	:
Bing Lou WONG et al	: DECISION ON PETITION TO
Serial No.: 13/179,590	: ACCEPT COLOR
Filed: July 11, 2011	DRAWINGS/PHOTOGRAPHS
Attorney Docket No.: P3323US04	

This is a decision on the petition filed on September 6, 2011 to accept color drawings under 37 CFR 1.84(a)(2).

A review showing that all requirements are met.

The petition to accept color drawings/photographs is **GRANTED**.

/Cecilia Tsang/
Cecilia J Tsang
SPE, Art Unit 1654

IN THE UNITED STATES PATENT AND TRADEMARK OFFICE

In re Application		Art Unit:	1654
Inventor(s):	Wong et al.	Examiner:	Christina Bradley
App. No.:	13/179590	Attorney Docket No.	P3323US04
Filed:	11 July 2011	Customer No.	95527

Title: TREATMENT METHODS USING A HEAT STABLE OXYGEN CARRIER-CONTAINING PHARMACEUTICAL COMPOSITION

PETITION UNDER 37 CFR 1.84(b)(2) TO ACCEPT COLOR PHOTOGRAPHS

Approved
9/8/11

Color photographs have been submitted in this application. The color photographs are necessary as the only practical medium by which aspects of the claimed subject matter may be accurately conveyed. The liver tumor recurrence vs. non-recurrence cannot be seen in black and white

The first paragraph of the Brief Description of the Drawings section of the Specification is being concurrently amended to recite the following language:

"The patent or application file contains at least one drawing executed in color. Copies of this patent or patent application publication with color drawing(s) will be provided by the Office upon request and payment of the necessary fee."

As the color photographs have been filed electronically via EFS-Web, only one set of the drawings is submitted in accordance with the guidelines set forth in 2010. The color drawings (FIGS. 18 and 19) are entered in PAIR under the Supplemental Content tab.

The petition fee under 1.17(h) accompanies this petition

Respectfully submitted,

/Margaret Burke/

6 September 2011

Margaret A. Burke
Reg. No. 34,474
Attorney for Applicants

5001 Hopewell Centre
183 Queen's Road, East
Wan Chai, HONG KONG
Telephone (Hong Kong): 852-2161-9988
mburke@ellacheong.com

UNITED STATES PATENT AND TRADEMARK OFFICE

Commissioner for Patents
United States Patent and Trademark Office
P.O. Box 1450
Alexandria, VA 22313-1450
www.uspto.gov

PANASONIC PATENT CENTER
1130 CONNECTICUT AVENUE NW, SUITE 1100
WASHINGTON DC 20036

MAILED

AUG 16 2011

OFFICE OF PETITIONS

In re Application of :
Kurata, et al. :
Application No. 13/179,614 : DECISION
Filed/Deposited: 11 July, 2011 :
Attorney Docket No. P29766-05 :

This is a decision on the petition pursuant to 37 C.F.R. §1.182, filed on 5 August, 2011, to change the order of the names of the inventors.

The petition pursuant to 37 C.F.R. §1.182 is **GRANTED**.

The guidance in the Commentary at MPEP §605.04(f) provides, in pertinent part:

> **§605.04(f) Signature on Joint Applications - Order of Names [R-3]**
>
> The order of names of joint patentees in the heading of the patent is taken from the order in which the typewritten names appear in the original oath or declaration. Care should therefore be exercised in selecting the preferred order of the typewritten names of the joint inventors, before filing, as requests for subsequent shifting of the names would entail changing numerous records in the Office. Since the particular order in which the names appear is of no consequence insofar as the legal rights of the joint applicants are concerned, no changes will be made except when a petition under 37 C.F.R. §1.182 is granted. The petition should be directed to the attention of the Office of Petitions. The petition to change the order of names must be signed by either the attorney or agent of record or all the applicants. Applicants are strongly encouraged to submit an application data sheet showing the new order of inventor names to ensure appropriate printing of the inventor names in any patent to issue. It is suggested that all typewritten and signed names appearing in the application papers should be in the same order as the typewritten names in the oath or declaration. (Emphasis supplied.)
>
> ***

The petition herein is signed by Counsel herein Stephen C. Glade (Reg. No. 57,601), who seeks the following order of inventors: Kazushi Kurata, Tetsuya Tanaka, Nobuo Higaki, Kunihiko

- Hayashi, Hiroshi Kadota, Tokuzo Kiyohara, Kozo Kimura, Hideshi Nishida, Kazuya Furukawa, Shigeki Fujii, Toshio Sugimura.

The $400.00 fee for the petition pursuant to 37 C.F.R. §1.182 was paid.

Office records are being corrected to reflect the change in the order of the named inventors. An updated filing receipt is enclosed. (Out of an abundance of caution, to ensure that the correction has been entered into Office records, the application is being referred to the Office of Patent Application Processing (OPAP) for review to ensure changes have been or are entered into Office records as to the order of inventors and the mailing of an updated filing receipt reflecting those changes consistent with this decision before the application is forwarded for further processing in due course.)

Telephone inquiries regarding this decision may be directed to the undersigned at (571) 272-3214—it is noted, however, that all practice before the Office is in writing (see: 37 C.F.R. §1.2[1]) and the proper authority for action on any matter in this regard are the statutes (35 U.S.C.), regulations (37 C.F.R.) and the commentary on policy (MPEP). Therefore, no telephone discussion may be controlling or considered authority for Petitioner's action(s).

/John J. Gillon, Jr./
John J. Gillon, Jr.
Senior Attorney
Office of Petitions

[1] The regulations at 37 C.F.R. §1.2 provide:

§1.2 Business to be transacted in writing.
All business with the Patent and Trademark Office should be transacted in writing. The personal attendance of applicants or their attorneys or agents at the Patent and Trademark Office is unnecessary. The action of the Patent and Trademark Office will be based exclusively on the written record in the Office. No attention will be paid to any alleged oral promise, stipulation, or understanding in relation to which there is disagreement or doubt.

UNITED STATES PATENT AND TRADEMARK OFFICE

UNITED STATES DEPARTMENT OF COMMERCE
United States Patent and Trademark Office
Address: COMMISSIONER FOR PATENTS
P.O. Box 1450
Alexandria, Virginia 22313-1450
www.uspto.gov

APPLICATION NO.	FILING DATE	FIRST NAMED INVENTOR	ATTORNEY DOCKET NO.	CONFIRMATION NO.
13/179,692	07/11/2011	Yutaka YANUMA	27825Z	1038

23389 7590 11/14/2011

SCULLY SCOTT MURPHY & PRESSER, PC
400 GARDEN CITY PLAZA
SUITE 300
GARDEN CITY, NY 11530

EXAMINER	
ART UNIT	PAPER NUMBER
3779	

MAIL DATE	DELIVERY MODE
11/14/2011	PAPER

Please find below and/or attached an Office communication concerning this application or proceeding.

The time period for reply, if any, is set in the attached communication.

UNITED STATES PATENT AND TRADEMARK OFFICE

Commissioner for Patents
United States Patent and Trademark Office
P.O. Box 1450
Alexandria, VA 22313-1450
www.uspto.gov

SCULLY SCOTT MURPHY & PRESSER, PC
400 GARDEN CITY PLAZA
SUITE 300
GARDEN CITY NY 11530

In re Application of: YANUMA, YUTAKA Serial No.: 13/179,692 Filed: July 11, 2011 Attorney Docket No. : 27825Z Title: ENDOSCOPE TREATMENT INSTRUMENT	: DECISION ON A REQUEST TO : PARTICIPATE IN PATENT : PROSECUTION HIGHWAY : PROGRAM AND PETITION : TO MAKE SPECIAL UNDER : CFR 1.102(a)

This is a decision on the request to participate in the Patent Prosecution Highway (PPH) program and the petition under 37 CFR 1.102(a), filed Nov. 8, 2011 to make the above-identified application special.

The request and petition are **granted.**

A grantable request to participate in the PPH program and petition to make special require:

(1) The U.S. application must validly claim priority under 35 U.S.C. 119(a) to one or more corresponding application(s) filed in the JPO;
(2) Applicant must submit a copy of the allowable/patentable claim(s) from the JPO application(s) along with an English translation thereof and a statement that the English translation is accurate;
(3) All the claims in the U.S. application must sufficiently correspond or be amended to sufficiently correspond to the allowable/patentable claim(s) in the JPO application(s);
(4) Examination of the U.S. application has not begun;
(5) Applicant must submit a copy of all the office actions from each of the JPO application(s) containing the allowable/patentable claim(s) along with an English translation thereof and a statement that the English translation is accurate; and
(6) Applicant must submit IDS listing the documents cited by the JPO examiner in the JPO office action along with copies of documents except U.S. patents or U.S. patent application publications.

In light of the petition being properly submitted, the request to participate in the PPH program and the petition comply with the above requirements. Accordingly, the above-identified application has been accorded "special" status.

The applicant is encouraged to cite and submit all relevant prior art references, if any, to facilitate examination in this application.

Response must be filed via EFS-Web. Telephone inquiries concerning this decision should be directed to Henry C. Yuen, at 571-272-4856.

Petition is **granted**.

/Henry C. Yuen/

Henry C. Yuen
Special Programs Examiner
Technology Center 3700
Tel: 571-272-4856

UNITED STATES PATENT AND TRADEMARK OFFICE

UNITED STATES DEPARTMENT OF COMMERCE
United States Patent and Trademark Office
Address: COMMISSIONER FOR PATENTS
P.O. Box 1450
Alexandria, Virginia 22313-1450
www.uspto.gov

APPLICATION NO.	FILING DATE	FIRST NAMED INVENTOR	ATTORNEY DOCKET NO.	CONFIRMATION NO.
13/179,766	07/11/2011	Randolph S. Porubcan	THER-5Accel	1187

93599 7590 07/18/2011

Eric P. Mirabel
3783 Darcus
Houston, TX 77005

EXAMINER	
ART UNIT	PAPER NUMBER
1653	

NOTIFICATION DATE	DELIVERY MODE
07/18/2011	ELECTRONIC

Please find below and/or attached an Office communication concerning this application or proceeding.

The time period for reply, if any, is set in the attached communication.

Notice of the Office communication was sent electronically on above-indicated "Notification Date" to the following e-mail address(es):

emirabel@comcast.net

JUL 18 2011

UNITED STATES PATENT AND TRADEMARK OFFICE

Commissioner for Patents
United States Patent and Trademark Office
P.O. Box 1450
Alexandria, VA 22313-1450
www.uspto.gov

Eric P. Mirabel
3783 Darcus
Houston TX 77005

In re Application of:
Porubcan et al.

Serial No.: 13/179,766

Filed: : July 11, 2011

Docket: **THER-5Accel**

DECISION ON PETITION TO MAKE SPECIAL FOR NEW APPLICATION UNDER 37 C.F.R. § 1.102 & M.P.E.P. § 708.02

Title: **INCREASING PROBIOTIC GROWTH RATE AND ACTIVITY USING PREBIOTIC COMPOSITION**

This is a decision on the petition July 11, 2011, to make the above-identified application special for accelerated examination procedure under 37 C.F.R. § 1.102(d).

The petition to make the application special is GRANTED.

The application is eligible for accelerated examination and the petition complies with the conditions for granting the application special status pursuant to the "Change to Practice for Petitions in Patent Applications to Make Special and for Accelerated Examination" published June 26, 2006, in the Federal Register. (71 Fed. Reg. 36323).

The prosecution of the instant application will be conducted expeditiously according to the following guidelines.

1. The application will be docketed to an examiner and taken up for action within two weeks of the date of this decision.

2. Restriction Practice:
If the examiner determines that the claims are not directed to a single invention, a telephone request to elect one single invention will be made pursuant to MPEP 812.01. As a prerequisite to the grant of this petition, the applicant has agreed to make an oral election, by telephone, without traverse. If the applicant refuses to make an election without traverse, or the examiner cannot reach the applicant after a reasonable effort, the

examiner will treat the first claimed invention (invention defined by claim 1) as having being constructively elected without traverse for examination.

3. Office action:
   If it is determined that, after appropriate consultation, there is a potential rejection or any other issue to be addressed, the examiner will telephone the applicant and arrange an interview to discuss and resolve the issue. An Office action, other than a Notice of Allowance and Fee(s) Due (Notice of Allowance), will not be issued unless either: 1) an interview was conducted but did not result in agreed to action that places the application in condition for allowance, or, 2) a determination is made that an interview would be unlikely to result in the application being placed in condition for allowance, and 3) an internal conference has been held to review any rejection of any claim.

4. Time for Reply:
   An Office action other than a Notice of Allowance or a final Office action will set a shortened statutory period of one month or thirty days, whichever is longer, for reply with no extension of time available under 37 CFR 1.136(a). Failure to timely file a reply within this non-extendible period for reply will result in the abandonment of the application.

5. Reply by Applicant:
   A timely reply to an Office action other than the Notice of Allowance must be submitted electronically via EFS or EFS-web and limited to addressing the rejections, objections and requirement made. Any amendment that attempts to: 1) add claims which would result in more than three pending independent claims or more than twenty pending total claims; 2) present claims not encompassed by the pre-examination search or an updated accelerated examination support document; or 3) present claims that are directed a non-elected invention or an invention other than that previously claimed and examined in the application, will be treated as not fully responsive and will not be entered.

   For any amendment to the claims (including any new claim) that is not encompassed by the accelerated examination support document, applicant must provide an updated accelerated examination support document that encompasses the amended or new claims at the time of filing of the amendment.

   To proceed expeditiously with the examination, it is recommended that a reply with amendments made to any claim or with any new claim being added be accompanied by an updated accelerated examination support document or a statement explaining how the amended or new claim is supported by the original accelerated examination support document.

6. Information Disclosure Statement (IDS):
7. Any IDS filed during prosecution must be submitted electronically via EFS or EFS-web, accompanied by an updated accelerated examination support document, and be in compliance with 37 CFR 1.97 and 1.98.

8. Post-Allowance Processing:
   To expedite processing of the allowed application into a patent, the applicant must: 1) pay the required fees within one month of the date of the Notice of Allowance, and 2) not file any post allowance papers not required by the Office. In no event may the issue fee be paid and accepted later than three months from the date of the Notice of Allowance.

9. After-Final and Appeal Procedures:
   To expedite prosecution, after receiving the final Office action, applicant must: 1) promptly file a notice of appeal, an appeal brief and appeal fees; and 2) not request a pre-appeal brief conference.

   Any amendment, affidavit or other evidence filed after final Office action must comply with applicable rules and the requirements outlined in numbered paragraphs 5 and 6 above.

   On appeal, the application will proceed according to normal appeal procedures. After appeal, the application will again be treated special.

10. Proceedings Outside the Normal Examination Process:
    If the application becomes involved in a proceeding that is outside the normal examination process (e.g., a secrecy order, national security review, interference proceeding, petitions under 37 CFR 1.181, 182 or 183), the application will be treated special before and after such proceeding.

11. Final Disposition:
    The twelve month goal of this accelerated examination procedure ends with a final disposition. The mailing of a final Office action, a Notice of Allowance, the filing of a Notice of Appeal, or the filing of a Request for Continued Examination (RCE) is the final disposition.

If, during prosecution, a paper is not filed electronically using EFS-web, a reply is filed but is not fully responsive, the application is involved in an appeal, or a proceeding outside normal examination process, the application will still be examined expeditiously, however, the final disposition may occur more than twelve months from the filing of the application.

Any inquiry regarding this decision should be directed to Marianne C. Seidel, Quality Assurance Specialist, at (571) 272-0584.

/MC Seidel/
Marianne C. Seidel, Quality Assurance Specialist
Technology Center 1600

Doc Code: PPH.PCT.652
Document Description: Petition to make special under PCT-Patent Pros Hwy

PTO/SB/20PCT-KR (06-10)
Approved for use through 01/31/2012. OMB 0651-0058
U.S. Patent and Trademark Office; U. S. DEPARTMENT OF COMMERCE
Under the Paperwork Reduction Act of 1995, no persons are required to respond to a collection of information unless it displays a valid OMB control number.

REQUEST FOR PARTICIPATION IN THE PATENT COOPERATION TREATY - PATENT PROSECUTION HIGHWAY (PCT-PPH) PILOT PROGRAM BETWEEN THE KOREAN INTELLECTUAL PROPERTY OFFICE (KIPO) AND THE USPTO

Application No:	13179996	Filing date:	11-JUL-2011
First Named Inventor:	William Dunn		
Title of the Invention:	SYSTEM AND METHOD FOR SELECTIVELY ENGAGING COOLING FANS WITHIN AN ELECTRONIC DISPLAY		

THIS REQUEST FOR PARTICIPATION IN THE PCT-PPH PILOT PROGRAM ALONG WITH THE REQUIRED DOCUMENTS MUST BE SUBMITTED VIA EFS-WEB. INFORMATION REGARDING EFS-WEB IS AVAILABLE AT HTTP://WWW.USPTO.GOV/EBC/EFS_HELP.HTML

APPLICANT HEREBY REQUESTS PARTICIPATION IN THE PCT-PPH PROGRAM AND PETITIONS TO MAKE THE ABOVE-IDENTIFIED APPLICATION SPECIAL UNDER THE PCT-PPH PROGRAM.

The above-identified application is (1) a national stage entry of the corresponding PCT application, or (2) a national stage entry of another PCT application which claims priority to the corresponding PCT application, or (3) a national application that claims domestic/ foreign priority to the corresponding PCT application, or (4) a national application which forms the basis for the priority claim in the corresponding PCT application, or (5) a continuing application of a U.S. application that satisfies one of (1) to (4) above, or (6) a U.S. application that claims domestic benefit to a U.S. provisional application which forms the basis for the priority claim in the corresponding PCT application.

The corresponding PCT application number(s) is/are: PCT/US11/43553

The international filing date of the corresponding PCT application(s) is/are:
11-JUL-2011

I. List of Required Documents:

a. **A copy of the latest international work product (WO/ISA, WO/IPEA, or IPER) in the above–identified corresponding PCT application(s)**

☑ Is attached.

☐ Is not attached because the document is already in the U.S. application.

b. **A copy of all claims which were indicated as having novelty, inventive step and industrial applicability in the above-identified corresponding PCT application(s).**

☑ Is attached.

☐ Is not attached because the document is already in the U.S. application.

c. **English translations of the documents in a. and b. above are attached (if the documents are not in the English language). A statement that the English translation is accurate is attached for the document in b. above.**

This collection of information is required by 35 U.S.C. 119, 37 CFR 1.55, and 37 CFR 1.102(d). The information is required to obtain or retain a benefit by the public, which is to file (and by the USPTO to process) an application. Confidentiality is governed by 35 U.S.C. 122 and 37 CFR 1.11 and 1.14. This collection is estimated to take 2 hours to complete, including gathering, preparing, and submitting the completed application form to the USPTO. Time will vary depending upon the individual case. Any comments on the amount of time you require to complete this form and/or suggestions for reducing this burden should be sent to the Chief Information Officer, U.S. Patent and Trademark Office, U.S. Department of Commerce, P.O. Box 1450, Alexandria, VA 22313-1450. DO NOT SEND FEES OR COMPLETED FORMS TO THIS ADDRESS.

PTO/SB/20PCT-KR (06-10)
Approved for use through 01/31/2012. OMB 0651-0058
U.S.Patent and Trademark Office; U.S. DEPARTMENT OF COMMERCE
Under the Paperwork Reduction Act of 1995, no persons are required to respond to a collection of information unless it displays a valid OMB control number.

REQUEST FOR PARTICIPATION IN THE PCT-PPH PILOT PROGRAM BETWEEN THE KIPO AND THE USPTO

(continued)

Application No.:	13179996
First Named Inventor:	William Dunn

d. **(1) An information disclosure statement listing the documents cited in the international work products (ISR, WO/ISA, WO/IPEA, IPER) of the corresponding PCT application.**

☑ Is attached

☐ Has already been filed in the above-identified U.S. application on _____

(2) Copies of all documents (except) for U.S. patents or U.S. patent application publications)

☐ Are attached.

☐ Have already been filed in the above-identified U.S. application on _____

II. Claims Correspondence Table:

Claims in US Application	Patentable Claims in the corresponding PCT Application	Explanation regarding the correspondence
1-5	1-5	Identical
6-7	6-7	Removed Multiple Dependency
8-10	8-10	Identical
11	11	Removed Multiple Dependency
12-13	12-13	Identical
14	14	Removed Multiple Dependency
15-20	15-20	Identical

III. All the claims in the US application sufficiently correspond to the patentable claims in the corresponding PCT application.

Signature /Tyler S. Dunham, Reg. No. 60,364/	Date 11/29/2011
Name (Print/Typed) Tyler S. Dunham	Registration Number 60,364

Privacy Act Statement

The **Privacy Act of 1974 (P.L. 93-579)** requires that you be given certain information in connection with your submission of the attached form related to a patent application or patent. Accordingly, pursuant to the requirements of the Act, please be advised that: (1) the general authority for the collection of this information is 35 U.S.C. 2(b)(2); (2) furnishing of the information solicited is voluntary; and (3) the principal purpose for which the information is used by the U.S. Patent and Trademark Office is to process and/or examine your submission related to a patent application or patent. If you do not furnish the requested information, the U.S. Patent and Trademark Office may not be able to process and/or examine your submission, which may result in termination of proceedings or abandonment of the application or expiration of the patent.

The information provided by you in this form will be subject to the following routine uses:

1. The information on this form will be treated confidentially to the extent allowed under the Freedom of Information Act (5 U.S.C. 552) and the Privacy Act (5 U.S.C 552a). Records from this system of records may be disclosed to the Department of Justice to determine whether disclosure of these records is required by the Freedom of Information Act.
2. A record from this system of records may be disclosed, as a routine use, in the course of presenting evidence to a court, magistrate, or administrative tribunal, including disclosures to opposing counsel in the course of settlement negotiations.
3. A record in this system of records may be disclosed, as a routine use, to a Member of Congress submitting a request involving an individual, to whom the record pertains, when the individual has requested assistance from the Member with respect to the subject matter of the record.
4. A record in this system of records may be disclosed, as a routine use, to a contractor of the Agency having need for the information in order to perform a contract. Recipients of information shall be required to comply with the requirements of the Privacy Act of 1974, as amended, pursuant to 5 U.S.C. 552a(m).
5. A record related to an International Application filed under the Patent Cooperation Treaty in this system of records may be disclosed, as a routine use, to the International Bureau of the World Intellectual Property Organization, pursuant to the Patent Cooperation Treaty.
6. A record in this system of records may be disclosed, as a routine use, to another federal agency for purposes of National Security review (35 U.S.C. 181) and for review pursuant to the Atomic Energy Act (42 U.S.C. 218(c)).
7. A record from this system of records may be disclosed, as a routine use, to the Administrator, General Services, or his/her designee, during an inspection of records conducted by GSA as part of that agency's responsibility to recommend improvements in records management practices and programs, under authority of 44 U.S.C. 2904 and 2906. Such disclosure shall be made in accordance with the GSA regulations governing inspection of records for this purpose, and any other relevant (*i.e.*, GSA or Commerce) directive. Such disclosure shall not be used to make determinations about individuals.
8. A record from this system of records may be disclosed, as a routine use, to the public after either publication of the application pursuant to 35 U.S.C. 122(b) or issuance of a patent pursuant to 35 U.S.C. 151. Further, a record may be disclosed, subject to the limitations of 37 CFR 1.14, as a routine use, to the public if the record was filed in an application which became abandoned or in which the proceedings were terminated and which application is referenced by either a published application, an application open to public inspection or an issued patent.
9. A record from this system of records may be disclosed, as a routine use, to a Federal, State, or local law enforcement agency, if the USPTO becomes aware of a violation or potential violation of law or regulation.

UNITED STATES PATENT AND TRADEMARK OFFICE

Commissioner for Patents
United States Patent and Trademark Office
P.O. Box 1450
Alexandria, VA 22313-1450
www.uspto.gov

MAILED

FEB 10 2012

OFFICE OF PETITIONS

STANDLEY LAW GROUP LLP
6300 RIVERSIDE DRIVE
DUBLIN OH 43017

In re Application of
DUNN, et al
Application No.: 13/179,996
Filed: July 11, 2011
Attorney Docket No.: MAN2241-096B
For: SYSTEM AND METHOD FOR SELECTIVELY ENGAGING COOLING FANS WITHIN AN ELECTRONIC DISPLAY

: DECISION ON REQUEST TO
: PARTICIPATE IN THE PATENT
: PROSECUTION HIGHWAY
: PROGRAM AND PETITION
: TO MAKE SPECIAL UNDER
: 37 CFR 1.102(a)

This is a decision on the request to participate in the PCT Patent Prosecution Highway (PCT-PPH) pilot program and the petition under 37 CFR 1.102(a), filed on November 29, 2011, to make the above-identified application special.

The request and petition are **GRANTED**.

Discussion

A grantable request to participate in the PCT-PPH pilot program and petition to make special require:

(1) The U.S. application must have an eligible relationship to one or more PCT applications where the ISA or IPEA are the JPO, EPO, KIPO, NPI, NBPR, Austria, Australia, Finland, Spain, Sweden, China or USPTO;

(2) At least one claim in the PCT application has novelty, inventive step, and industrial applicability and must be free of any observations in Box VIII in the latest work product in the international stage or applicant must identify and explain why the claim(s) is/are not subject to the observation in Box VIII;

(3) Applicant must submit a copy of the claim(s) from the PCT application(s) that have novelty, inventive step, and industrial applicability along with an English translation thereof and a statement that the English translation is accurate, if the claims are not in the English language;

(4) All the claims in the U.S. application must sufficiently correspond or be amended to sufficiently correspond to the claim(s) that have novelty, inventive step, and industrial applicability in the PCT application(s);

(5) Examination of the U.S. application has not begun;

(6) Applicant must submit a copy of the latest international work product from the PCT application indicating that the claim(s) have novelty, inventive step, and industrial applicability along with an English translation thereof and a statement that the English translation is accurate if the latest international work product is not in the English language;

(7) Applicant must submit an IDS listing the documents cited by the PCT examiner in the international work product along with copies of documents except U.S. patents or U.S. patent application publications.

The request to participate in the PCT-PPH pilot program and petition comply with the above requirements. Accordingly, the above-identified application has been accorded "special" status.

Telephone inquiries concerning this decision should be directed to Diane Goodwyn at (571) 272-6735.

All other inquiries concerning the examination or status of the application is accessible in the PAIR system at http://www.uspto.gov/ebc.index.html.

This application is being forwarded to Technology Center 2882 for action on the merits commensurate with this decision.

David Bucci
Petitions Examiner
Office of Petitions

UNITED STATES PATENT AND TRADEMARK OFFICE

UNITED STATES DEPARTMENT OF COMMERCE
United States Patent and Trademark Office
Address: COMMISSIONER FOR PATENTS
P.O. Box 1450
Alexandria, Virginia 22313-1450
www.uspto.gov

BIB DATA SHEET

CONFIRMATION NO. 1615

SERIAL NUMBER	FILING or 371(c) DATE RULE	CLASS	GROUP ART UNIT	ATTORNEY DOCKET NO.
13/180,003	07/11/2011	438	2822	REN-7088-03

APPLICANTS
Tadatoshi DANNO, Tokyo, JAPAN;

**** CONTINUING DATA ***************************
This application is a DIV of 12/880,417 09/13/2010 PAT 7,998,796
which is a DIV of 12/432,057 04/29/2009 PAT 7,919,858

**** FOREIGN APPLICATIONS ***************************
JAPAN 2008-153988 06/12/2008

**** IF REQUIRED, FOREIGN FILING LICENSE GRANTED ****
07/19/2011

Foreign Priority claimed ☑ Yes ☐ No 35 USC 119(a-d) conditions met ☑ Yes ☐ No Verified and Acknowledged /KHANH B DUONG/ Examiner's Signature	☐ Met after Allowance KBD Initials	STATE OR COUNTRY	SHEETS DRAWINGS	TOTAL CLAIMS	INDEPENDENT CLAIMS
		JAPAN	62	13	1

ADDRESS

MATTINGLY & MALUR, PC
1800 DIAGONAL ROAD
SUITE 370
ALEXANDRIA, VA 22314
UNITED STATES

TITLE

SEMICONDUCTOR DEVICE AND MANUFACTURING METHOD THEREOF

FILING FEE RECEIVED		
1360	FEES: Authority has been given in Paper No._____ to charge/credit DEPOSIT ACCOUNT No._____ for following:	☐ All Fees ☐ 1.16 Fees (Filing) ☐ 1.17 Fees (Processing Ext. of time) ☐ 1.18 Fees (Issue) ☐ Other _____ ☐ Credit

UNITED STATES PATENT AND TRADEMARK OFFICE

Commissioner for Patents
United States Patent and Trademark Office
P.O. Box 1450
Alexandria, VA 22313-1450
www.uspto.gov

MAILED

MAR 29 2012

OFFICE OF PETITIONS

SCULLY SCOTT MURPHY
& PRESSER, PC
400 GARDEN CITY PLAZA
SUITE 300
GARDEN CITY NY 11530

In re Application of	:	DECISION ON REQUEST TO
Takuto Ikai, et al.	:	PARTICIPATE IN THE PATENT
Application No.: 13/180,005	:	PROSECUTION HIGHWAY
Filed: 11 November 2011	:	PROGRAM AND PETITION
Attorney Docket No.: 27829Z	:	TO MAKE SPECIAL UNDER
For: IN-VIVO INFORMATION	:	37 CFR 1.102(a)
ACQUIRING SYSTEM	:	

This is a decision on the request to participate in the Patent Prosecution Highway (PPH) program and the petition under 37 CFR 1.102(a), filed 31 January 2012, to make the above-identified application special.

The request and petition are **GRANTED**.

Discussion

A grantable request to participate in the PPH pilot program and petition to make special require:

1. The U.S. application is

    a. a Paris Convention application which either
        i. validly claims priority under 35 U.S.C. 119(a) and 37 CFR 1.55 to one or more applications filed in the JPO, or
        ii. validly claims priority to a PCT application that contains no priority claims, or
    b. a national stage application under the PCT (an application which entered the national stage in the U.S. from a PCT international application after compliance with 35 U.S.C. 371), which PCT application
        i. validly claims priority to an application filed in the JPO, or
        ii. validly claims priority to a PCT application that contains no priority claims, or
        iii. contains no priority claim, or
    c. a so-called bypass application filed under 35 U.S.C. 111(a) which validly claims benefit under 35 U.S.C. 120 to a PCT application, which PCT application

i. validly claims priority to an application filed in the JPO, or
ii. validly claims priority to a PCT application that contains no priority claims, or
iii. contains no priority claim;

2. Applicant must:
   a. Ensure all the claims in the U.S. application must sufficiently correspond or be amended to sufficiently correspond to the allowable/patentable claim(s) in the JPO application(s) and
   b. Submit a claims correspondence table in English;
3. Examination of the U.S. application has not begun;
4. Applicant must submit:
   a. Documentation of prior office action:
      i. a copy of the office action(s) just prior to the "Decision to Grant a Patent" from each of the JPO application(s) containing the allowable/patentable claim(s) or
      ii. if the allowable/patentable claims(s) are from a "Notification of Reasons for Refusal" then the Notification of Reasons for Refusal or
      iii. if the JPO application is a first action allowance then no office action from the JPO is necessary should be indicated on the request/petition form;
   b. An English language translation of the JPO Office action from (5)(a)(i)-(ii) above
5. Applicant must submit:
   a. An IDS listing the documents cited by the JPO examiner in the JPO office action (unless already submitted in this application)
   b. Copies of the documents except U.S. patents or U.S. patent application publications (unless already submitted in this application);

The request to participate in the PPH pilot program and petition comply with the above requirements. Accordingly, the above-identified application has been accorded "special" status.

Telephone inquiries concerning this decision should be directed to the undersigned at (571) 272-3204.

All other inquiries concerning the examination or status of the application is accessible in the PAIR system at http://www.uspto.gov/ebc.index.html.

This application will be forwarded to the examiner for action on the merits commensurate with this decision.

/SDB/

Sherry D. Brinkley
Petitions Examiner
Office of Petitions

UNITED STATES PATENT AND TRADEMARK OFFICE

UNITED STATES DEPARTMENT OF COMMERCE
United States Patent and Trademark Office
Address: COMMISSIONER FOR PATENTS
P.O. Box 1450
Alexandria, Virginia 22313-1450
www.uspto.gov

APPLICATION NO.	FILING DATE	FIRST NAMED INVENTOR	ATTORNEY DOCKET NO.	CONFIRMATION NO.
13/180,051	07/11/2011	Robert David Blaylock	18995-0022001	1683

26171 7590 03/30/2012
FISH & RICHARDSON P.C. (DC)
P.O. BOX 1022
MINNEAPOLIS, MN 55440-1022

EXAMINER	
ART UNIT	PAPER NUMBER
3752	

NOTIFICATION DATE	DELIVERY MODE
03/30/2012	ELECTRONIC

Please find below and/or attached an Office communication concerning this application or proceeding.

The time period for reply, if any, is set in the attached communication.

Notice of the Office communication was sent electronically on above-indicated "Notification Date" to the following e-mail address(es):

PATDOCTC@fr.com

UNITED STATES PATENT AND TRADEMARK OFFICE

Commissioner for Patents
United States Patent and Trademark Office
P.O. Box 1450
Alexandria, VA 22313-1450
www.uspto.gov

FISH & RICHARDSON P.C. (DC)
P.O. BOX 1022
MINNEAPOLIS MN 55440-1022

Applicant: Blaylock et al.
Appl. No.: 13/180,051
Filing Date: July 11, 2011
Title: FRAGRANCE DIFFUSION SYSTEM
Attorney Docket No.: 18995-0022001
Pub. No.: US 2012/0018530 A1
Pub. Date: January 26, 2012

This is a decision on the request for republication of patent application publication under 37 CFR 1.221(a), filed on March 8, 2012, for the above-identified application.

The request under 37 CFR 1.221(a) is DISMISSED.

37 CFR 1.221(a) requires "a copy of the application in compliance with the Office electronic filing system requirements and be accompanied by the publication fee set forth in § 1.18(d) and the processing fee set forth in § 1.17(i)". If the request for republication does not comply with the electronic filing system requirements, the republication will not take place and the publication fee set forth in § 1.18(d) will be refunded. The processing fee will be retained.

The applicant did not supply a copy of the application in compliance with the Office electronic filing system, as required by 37 CFR 1.221(a) because **the applicant submitted the papers as a "Document for an existing application", which are entered into the application file, and not as a "Pre-Grant Publication" submission**. The request for republication does not comply with the electronic filing system requirements, thus republication will not take place.

Any request for republication under 37 CFR 1.221(a), must be submitted via the EFS system, as a Pre-Grant publication submission and must include a copy of the application in compliance with the Office electronic filing system requirements. The applicant is directed to the following website for additional instructions on how to submit a Pre-Grant Publication submission via the electronic filing system:

http://www.uspto.gov/ebc/portal/efs/pgpub_quickstart.pdf

Any questions or requests for reconsideration of the decision should be addressed as follows:

By mail to: Mail Stop PGPUB
Commissioner for Patents
P.O. Box 1450
Alexandria, Va. 22313-1450

By facsimile: 571-273-8300

Telephone inquiries regarding this correspondence should be directed to The Office of Data Management at 571-272-4200.

Tammy J. Koontz
Office of Data Management
United States Patent & Trademark Office

UNITED STATES PATENT AND TRADEMARK OFFICE

Commissioner for Patents
United States Patent and Trademark Office
P.O. Box 1450
Alexandria, VA 22313-1450
www.uspto.gov

LADAS & PARRY LLP
1040 AVENUE OF THE AMERICAS
NEW YORK NY 10018-3738

MAILED
APR 04 2012
OFFICE OF PETITIONS

In re Application of
KITAMURA, et al
Application No.: 13/180,067
Filed: July 11, 2011
Attorney Docket No.: U 018435-9
For: METHOD FOR PREPARING A HOLOGRAM RECORDING MEDIUM

: DECISION ON REQUEST TO
: PARTICIPATE IN THE PATENT
: PROSECUTION HIGHWAY
: PROGRAM AND PETITION
: TO MAKE SPECIAL UNDER
: 37 CFR 1.102(a)

This is a decision on the request to participate in the Patent Prosecution Highway (PPH) program and the petition under 37 CFR 1.102(a), filed February 6, 2012, to make the above-identified application special.

The request and petition are **GRANTED**.

DISCUSSION

A grantable request to participate in the PPH pilot program and petition to make special require:

1. The U.S. application is

    a. a Paris Convention application which either
        i. validly claims priority under 35 U.S.C. 119(a) and 37 CFR 1.55 to one or more applications filed in the JPO, or
        ii. validly claims priority to a PCT application that contains no priority claims, or
    b. a national stage application under the PCT (an application which entered the national stage in the U.S. from a PCT international application after compliance with 35 U.S.C. 371), which PCT application
        i. validly claims priority to an application filed in the JPO, or
        ii. validly claims priority to a PCT application that contains no priority claims, or
        iii. contains no priority claim, or

c. a so-called bypass application filed under 35 U.S.C. 111(a) which validly claims benefit under 35 U.S.C. 120 to a PCT application, which PCT application
   i. validly claims priority to an application filed in the JPO, or
   ii. validly claims priority to a PCT application that contains no priority claims, or
   iii. contains no priority claim;

2. Applicant must:
   a. Ensure all the claims in the U.S. application must sufficiently correspond or be amended to sufficiently correspond to the allowable/patentable claim(s) in the JPO application(s) and
   b. Submit a claims correspondence table in English;
3. Examination of the U.S. application has not begun;
4. Applicant must submit:
   a. Documentation of prior office action:
      i. a copy of the office action(s) just prior to the "Decision to Grant a Patent" from each of the JPO application(s) containing the allowable/patentable claim(s) or
      ii. if the allowable/patentable claims(s) are from a "Notification of Reasons for Refusal" then the Notification of Reasons for Refusal or
      iii. if the JPO application is a first action allowance then no office action from the JPO is necessary should be indicated on the request/petition form;
   b. An English language translation of the JPO Office action from (5)(a)(i)-(ii) above
5. Applicant must submit:
   a. An IDS listing the documents cited by the JPO examiner in the JPO office action (unless already submitted in this application)
   b. Copies of the documents except U.S. patents or U.S. patent application publications (unless already submitted in this application);

The request to participate in the PPH pilot program and petition comply with the above requirements. Accordingly, the above-identified application has been accorded "special" status.

Telephone inquiries concerning this decision should be directed to the undersigned at (571) 272-6735.

All other inquiries concerning the examination or status of the application is accessible in the PAIR system at http://www.uspto.gov/ebc.index.html.

This application is being forwarded to the examiner for action on the merits commensurate with this decision.

/Diane Goodwyn/
Diane Goodwyn
Petitions Examiner
Office of Petitions

UNITED STATES PATENT AND TRADEMARK OFFICE

Commissioner for Patents
United States Patent and Trademark Office
P.O. Box 1450
Alexandria, VA 22313-1450
www.uspto.gov

MAILED
MAR 27 2012
OFFICE OF PETITIONS

FOUNTAINHEAD LAW GROUP, PC
CHAD R. WALSH
900 LAFAYETTE STREET
SUITE 301
SANTA CLARA CA 95050

In re Application of	:	
Wells WHITNEY et al.	:	
Application No. 13/180,112	:	NOTICE UNDER 37 CFR. 1.28(c)
Filed: July 11, 2011	:	
Attorney Docket No. 000103-000101US	:	

This is a notice regarding your request for acceptance of a fee deficiency submission under 37 CFR 1.28.

The Office no longer investigates or rejects original or reissue applications under 37 CFR 1.56. **1098 Off. Gaz. Pat. Office 502 (January 3, 1989)**. Therefore, nothing in this Notice is intended to imply that an investigation was done.

Your fee deficiency submission under 37 CFR 1.28 is hereby **ACCEPTED**.

This application is no longer entitled to small entity status. Accordingly, all future fees paid in this application must be paid at the large entity rate.

Inquiries related to this communication should be directed to Michelle R. Eason at (571) 272-4231.

/Thurman K. Page/

Thurman K. Page
Petitions Examiner
Office of Petitions

UNITED STATES PATENT AND TRADEMARK OFFICE

Commissioner for Patents
United States Patent and Trademark Office
P.O. Box 1450
Alexandria, VA 22313-1450
www.uspto.gov

JETTER & ASSOCIATES, P.A./UNIVERSITY OF CENTRAL FLORIDA RESEARCH FOUNDATION, INC.
8295 NORTH MILITARY TRAIL, SUITE B
PALM BEACH GARDENS FL 33410

MAILED

JUL 27 2011

OFFICE OF PETITIONS

In re Application of :
Seal et al. :
Application No. 13/180,161 : ON PETITION
Filed: July 11, 2011
Attorney Docket No. UCF-32192 (10290) :
:

This is a decision on the petition under 37 CFR 1.102(c)(1), filed July 11, 2011, to make the above-identified application special based on applicant's age as set forth in M.P.E.P. § 708.02, Section IV.

The petition is **GRANTED**.

A grantable petition to make an application special under 37 CFR 1.102(c)(1) and MPEP § 708.02, Section IV: Applicant's Age must be accompanied by evidence showing that at least one of the applicants is 65 years of age, or more, such as a birth certificate or a statement by applicant. No fee is required

The instant petition includes a statement (PTO/SB/130 form) by applicant's attorney that applicant is 65 years of age. Accordingly, the above-identified application has been accorded "special" status.

It is not apparent whether the person signing the instant petition was ever given a power of attorney or authorization of agent to prosecute this patent application. In accordance with 37 CFR 1.34(a), the signature of appearing on the petition shall constitute a representation to the United States Patent and Trademark Office that he/she is authorized to represent the particular party in whose behalf he/she acts.

Telephone inquiries concerning this decision should be directed to the undersigned at 571-272-7751. All other inquiries concerning either the examination or status of the application should be directed to the Technology Center.

This matter is being referred to the Office of Patent Application Processing for further processing in accordance with this decision on petition.

/Joan Olszewski/
Joan Olszewski
Petitions Examiner
Office of Petitions

UNITED STATES PATENT AND TRADEMARK OFFICE

Commissioner for Patents
United States Patent and Trademark Office
P.O. Box 1450
Alexandria, VA 22313-1450
www.uspto.gov

DLA PIPER LLP US
P. O. BOX 2758
RESTON VA 20195

MAILED
JUL 26 2011
OFFICE OF PETITIONS

In re Application of
Frampton E. Ellis
Application No. 13/180,164
Filed: July 11, 2011
Attorney Docket No. 313449-000026

DECISION ON PETITION

This is a decision on the petition under 37 CFR 1.102(c)(1), filed July 11, 2011, to make the above-identified application special based on applicant's age as set forth in M.P.E.P. § 708.02, Section IV.

The petition is **DISMISSED.**

A grantable petition to make an application special under 37 CFR 1.102(c)(1) and MPEP § 708.02, Section IV: Applicant's Age must be accompanied by evidence showing that at least one of the applicants is 65 years of age, or more, such as a birth certificate or a statement by applicant. No fee is required

Petitioner has submitted a petition stating Frampton E. Ellis, III as the applicant who is 65 years of age or older. However, a review of USPTO records reveals the sole inventor listed in the above-identified application as Frampton E. Ellis.

Therefore, the instant petition submitted fails to identify the sole inventor for which the petition to make special is being requested.

Further correspondence with respect to this matter should be addressed as follows:

By Mail: Mail Stop. PETITIONS
Commissioner for Patents
P. O. Box 1450
Alexandria, VA 22313-1450

By hand: U.S. Patent and Trademark Office
Customer Service Window, Mail Stop Petitions
Randolph Building
401 Dulany Street
Alexandria, VA 22314

By FAX: (571) 273-8300

Telephone inquiries concerning this decision should be directed to the undersigned at 571-272-7751. All other inquires concerning either the examination or status of the application should be directed to the Technology Center.

/Joan Olszewski/
Joan Olszewski
Petitions Examiner
Office of Petitions

UNITED STATES PATENT AND TRADEMARK OFFICE

Commissioner for Patents
United States Patent and Trademark Office
P.O. Box 1450
Alexandria, VA 22313-1450
www.uspto.gov

DLA PIPER LLP US
P. O. BOX 2758
RESTON VA 20195

MAILED

SEP 06 2011

OFFICE OF PETITIONS

In re Application of :
Frampton E. Ellis :
Application No. 13/180,164 : ON PETITION
Filed: July11, 2011
Attorney Docket No. 313449-000026 :
:

This is a decision on the renewed petition under 37 CFR 1.102(c)(1), filed August 25, 2011, to make the above-identified application special based on applicant's age as set forth in M.P.E.P. § 708.02, Section IV.

The petition is **GRANTED**.

A grantable petition to make an application special under 37 CFR 1.102(c)(1) and MPEP § 708.02, Section IV: Applicant's Age must be accompanied by evidence showing that at least one of the applicants is 65 years of age, or more, such as a birth certificate or a statement by applicant. No fee is required

The instant petition includes a statement (PTO/SB/130 form) by the applicant's attorney that applicant is 65 years of age. Accordingly, the above-identified application has been accorded "special" status.

Telephone inquiries concerning this decision should be directed to the undersigned at 571-272-7751. All other inquiries concerning either the examination or status of the application should be directed to the Technology Center.

This matter is being referred to the Technology Center Art Unit 2431 for action on the merits commensurate with this decision.

/Joan Olszewski/
Joan Olszewski
Petitions Examiner
Office of Petitions

Doc Code: PET.GREEN
Document Description: Petition for Green Tech Pilot

PTO/SB/420 (03-11)

PETITION TO MAKE SPECIAL UNDER THE GREEN TECHNOLOGY PILOT PROGRAM

Attorney Docket Number: 39605-214951	Application Number (if known): 13/180,168	Filing date: 07/11/2011

First Named Inventor: Patrick Chapman

Title: MODULAR PHOTOVOLTAIC POWER SUPPLY ASSEMBLY

APPLICANT HEREBY REQUESTS TO PARTICIPATE IN THE GREEN TECHNOLOGY PILOT PROGRAM FOR THE ABOVE-IDENTIFIED APPLICATION. See Instruction Sheet on page 2.

This petition must be timely filed electronically using the USPTO electronic filing system, EFS-Web.

1. By filing this petition:

   Applicant is requesting early publication: Applicant hereby requests early publication under 37 CFR 1.219 and the publication fee set forth in 37 CFR 1.18(d) accompanies this request.

2. By filing this petition: applicant is agreeing to make an election without traverse in a telephonic interview and elect an invention that meets the eligibility requirements for the Green Technology Pilot Program, if the Office determines that the claims are not obviously directed to a single invention. See Instruction Sheet.

3. This request is accompanied by statements of special status for the eligibility requirement.

4. The application contains no more than three (3) independent claims and twenty (20) total claims.

5. The application does not contain any multiple dependent claims.

6. Other attachments: STATEMENTS OF SPECIAL STATUS

Signature /Glen M. Kellett/	Date 07/16/2011
Name (Print/Typed) Glen M. Kellett	Registration Number 60,202

Note: *Signatures of all the inventors or assignees of record of the entire interest or their representative(s) are required in accordance with 37 CFR 1.33 and 11.18. Please see 37 CFR 1.4(d) for the form of the signature. If necessary, submit multiple forms for more than one signature, see below*.*

☐ *Total of _____ forms are submitted.

If you need assistance in completing the form, call 1-800-PTO-9199 and select option 2.

UNITED STATES PATENT AND TRADEMARK OFFICE

UNITED STATES DEPARTMENT OF COMMERCE
United States Patent and Trademark Office
Address: COMMISSIONER FOR PATENTS
P.O. Box 1450
Alexandria, Virginia 22313-1450
www.uspto.gov

APPLICATION NO.	FILING DATE	FIRST NAMED INVENTOR	ATTORNEY DOCKET NO.	CONFIRMATION NO.
13/180,168	07/11/2011	Patrick Chapman	39605-214951	1928

23643 7590 09/07/2011
BARNES & THORNBURG LLP
11 SOUTH MERIDIAN
INDIANAPOLIS, IN 46204

EXAMINER	
ART UNIT	PAPER NUMBER
2838	

NOTIFICATION DATE	DELIVERY MODE
09/07/2011	ELECTRONIC

Please find below and/or attached an Office communication concerning this application or proceeding.

The time period for reply, if any, is set in the attached communication.

Notice of the Office communication was sent electronically on above-indicated "Notification Date" to the following e-mail address(es):

indocket@btlaw.com

UNITED STATES PATENT AND TRADEMARK OFFICE

Commissioner for Patents
United States Patent and Trademark Office
P.O. Box 1450
Alexandria, VA 22313-1450
www.uspto.gov

BARNES & THORNBURG LLP
11 SOUTH MERIDIAN
INDIANAPOLIS IN 46204

In re Application of	:	
CHAPMAN et al.	:	DECISION ON PETITION
Application No. 13/180168	:	TO MAKE SPECIAL UNDER
Filed: July 11, 2011	:	THE GREEN TECHNOLOGY
Attorney Docket No. 39605-214951	:	PILOT PROGRAM

This is a decision on the petition under 37 CFR 1.102, filed on July 16, 2011, to make the above-identified application special under the pilot program for applications pertaining to Green Technologies as set forth 74 Federal Register Notice 64666 (December 8, 2009) and amended by 75 Federal Register Notice 28554 (May 21, 2010) and 75 Federal Register Notice 69049 (November 10, 2010).

The petition is **GRANTED**.

A grantable petition to make an application special under 37 CFR 1.102 and the pilot program as set forth in 74 FR 64666 must be directed to a nonprovisional application filed under 35 USC 111(a) or be a national stage entry under 35 USC 371, exclusive of any reissue applications.

In order to qualify for special status, the following requirements must be met. 1) The application must have no more than 3 independent claims and no more than 20 total claims. 2) The application must not contain any multiple dependent claims. 3) The petition must state the basis for seeking special status, i.e., the claimed invention either: A) materially enhances the quality of the environment or B) materially contributes to: i) the discovery or development of renewable energy resources, ii) the more efficient utilization and conservation of energy resources, or iii) greenhouse gas emission reduction. 4) If the disclosure is not clear on its face that the claimed invention materially contributes under category (A) or (B), the petition must be accompanied by a statement by the applicant, assignee, or an attorney/agent registered to practice before the Office explaining how the materiality standard is met. 5) A statement that applicant will agree to make an election without traverse in a telephonic interview if a restriction requirement is made by the examiner. 6) The petition to make special must be filed electronically. 7) The petition must be filed at least one day prior to the date that a first Office Action appears in the Patent Application Information Retrieval (PAIR) system. 8) The petition must be accompanied by a request for early publication in compliance with 37 CFR 1.219 and include the publication fee as set forth in 37 CFR 1.18(d).

The requirement for a fee for consideration of the petition to make special for applications pertaining to Green Technologies has been waived.

The instant petition complies with items 1 – 8 above. Accordingly, the above-identified application has been accorded "special" status.

Telephone inquires concerning this decision should be directed to Colleen Dunn at 571-272-1170.

The application is being forwarded to the appropriate Technology Center Art Unit for action on the merits commensurate with this decision.

/Colleen Dunn/

Colleen Dunn
Quality Assurance Specialist
Technology Center 2800

Doc Code: PET.GREEN
Document Description: Petition for Green Tech Pilot

PTO/SB/420 (03-11)

PETITION TO MAKE SPECIAL UNDER THE GREEN TECHNOLOGY PILOT PROGRAM

Attorney Docket Number: 39605-214953	Application Number (if known): 13/180,170	Filing date: 07/11/2011

First Named Inventor: Patrick Chapman

Title: CONFIGURABLE POWER SUPPLY ASSEMBLY

APPLICANT HEREBY REQUESTS TO PARTICIPATE IN THE GREEN TECHNOLOGY PILOT PROGRAM FOR THE ABOVE-IDENTIFIED APPLICATION. See Instruction Sheet on page 2.

This petition must be timely filed electronically using the USPTO electronic filing system, EFS-Web.

1. By filing this petition:

   Applicant is requesting early publication: Applicant hereby requests early publication under 37 CFR 1.219 and the publication fee set forth in 37 CFR 1.18(d) accompanies this request.

2. By filing this petition: applicant is agreeing to make an election without traverse in a telephonic interview and elect an invention that meets the eligibility requirements for the Green Technology Pilot Program, if the Office determines that the claims are not obviously directed to a single invention. See Instruction Sheet.

3. This request is accompanied by statements of special status for the eligibility requirement.

4. The application contains no more than three (3) independent claims and twenty (20) total claims.

5. The application does not contain any multiple dependent claims.

6. Other attachments: STATEMENTS OF SPECIAL STATUS

Signature /Glen M. Kellett/	Date 07/16/2011
Name (Print/Typed) Glen M. Kellett	Registration Number 60,202

Note: *Signatures of all the inventors or assignees of record of the entire interest or their representative(s) are required in accordance with 37 CFR 1.33 and 11.18. Please see 37 CFR 1.4(d) for the form of the signature. If necessary, submit multiple forms for more than one signature, see below*.*

☐ *Total of _____ forms are submitted.

If you need assistance in completing the form, call 1-800-PTO-9199 and select option 2.

UNITED STATES PATENT AND TRADEMARK OFFICE

UNITED STATES DEPARTMENT OF COMMERCE
United States Patent and Trademark Office
Address: COMMISSIONER FOR PATENTS
P.O. Box 1450
Alexandria, Virginia 22313-1450
www.uspto.gov

APPLICATION NO.	FILING DATE	FIRST NAMED INVENTOR	ATTORNEY DOCKET NO.	CONFIRMATION NO.
13/180,170	07/11/2011	Patrick Chapman	39605-214953	1935

23643 7590 07/28/2011

BARNES & THORNBURG LLP
11 SOUTH MERIDIAN
INDIANAPOLIS, IN 46204

EXAMINER	
ART UNIT	PAPER NUMBER
2838	

NOTIFICATION DATE	DELIVERY MODE
07/28/2011	ELECTRONIC

Please find below and/or attached an Office communication concerning this application or proceeding.

The time period for reply, if any, is set in the attached communication.

Notice of the Office communication was sent electronically on above-indicated "Notification Date" to the following e-mail address(es):

indocket@btlaw.com

UNITED STATES PATENT AND TRADEMARK OFFICE

Commissioner for Patents
United States Patent and Trademark Office
P.O. Box 1450
Alexandria, VA 22313-1450
www.uspto.gov

BARNES & THORNBURG LLP
11 SOUTH MERIDIAN
INDIANAPOLIS IN 46204

In re Application of	:	
Patrick CHAPMAN	:	DECISION ON PETITION
Application No. 13/180170	:	TO MAKE SPECIAL UNDER
Filed: July 11, 2011	:	THE GREEN TECHNOLOGY
Attorney Docket No. 39605-214953	:	PILOT PROGRAM

This is a decision on the petition under 37 CFR 1.102, filed on July 16, 2011, to make the above-identified application special under the pilot program for applications pertaining to Green Technologies as set forth 74 Federal Register Notice 64666 (December 8, 2009) and amended by 75 Federal Register Notice 28554 (May 21, 2010) and 75 Federal Register Notice 69049 (November 10, 2010).

The petition is **GRANTED**.

A grantable petition to make an application special under 37 CFR 1.102 and the pilot program as set forth in 74 FR 64666 must be directed to a nonprovisional application filed under 35 USC 111(a) or be a national stage entry under 35 USC 371, exclusive of any reissue applications.

In order to qualify for special status, the following requirements must be met. 1) The application must have no more than 3 independent claims and no more than 20 total claims. 2) The application must not contain any multiple dependent claims. 3) The petition must state the basis for seeking special status, i.e., the claimed invention either: A) materially enhances the quality of the environment or B) materially contributes to: i) the discovery or development of renewable energy resources, ii) the more efficient utilization and conservation of energy resources, or iii) greenhouse gas emission reduction. 4) If the disclosure is not clear on its face that the claimed invention materially contributes under category (A) or (B), the petition must be accompanied by a statement by the applicant, assignee, or an attorney/agent registered to practice before the Office explaining how the materiality standard is met. 5) A statement that applicant will agree to make an election without traverse in a telephonic interview if a restriction requirement is made by the examiner. 6) The petition to make special must be filed electronically. 7) The petition must be filed at least one day prior to the date that a first Office Action appears in the Patent Application Information Retrieval (PAIR) system. 8) The petition must be accompanied by a request for early publication in compliance with 37 CFR 1.219 and include the publication fee as set forth in 37 CFR 1.18(d).

The requirement for a fee for consideration of the petition to make special for applications pertaining to Green Technologies has been waived.

The instant petition complies with items 1 – 8 above. Accordingly, the above-identified application has been accorded "special" status.

Telephone inquires concerning this decision should be directed to Colleen Dunn at 571-272-1170.

The application is being forwarded to the appropriate Technology Center Art Unit for action on the merits commensurate with this decision.

FOR

Colleen Dunn
Quality Assurance Specialist
Technology Center 2800

Doc Code: PET.GREEN
Document Description: Petition for Green Tech Pilot

PTO/SB/420 (03-11)

PETITION TO MAKE SPECIAL UNDER THE GREEN TECHNOLOGY PILOT PROGRAM

Attorney Docket Number: 39605-214950	Application Number (if known): 13/180,176	Filing date: 07/11/2011

First Named Inventor: Patrick Chapman

Title: METHOD AND DEVICE FOR CONTROLLING A CONFIGURABLE POWER SUPPLY

APPLICANT HEREBY REQUESTS TO PARTICIPATE IN THE GREEN TECHNOLOGY PILOT PROGRAM FOR THE ABOVE-IDENTIFIED APPLICATION. See Instruction Sheet on page 2.

This petition must be timely filed electronically using the USPTO electronic filing system, EFS-Web.

1. By filing this petition:

   Applicant is requesting early publication: Applicant hereby requests early publication under 37 CFR 1.219 and the publication fee set forth in 37 CFR 1.18(d) accompanies this request.

2. By filing this petition: applicant is agreeing to make an election without traverse in a telephonic interview and elect an invention that meets the eligibility requirements for the Green Technology Pilot Program, if the Office determines that the claims are not obviously directed to a single invention. See Instruction Sheet.

3. This request is accompanied by statements of special status for the eligibility requirement.

4. The application contains no more than three (3) independent claims and twenty (20) total claims.

5. The application does not contain any multiple dependent claims.

6. Other attachments: STATEMENTS OF SPECIAL STATUS

Signature /Glen M. Kellett/	Date 07/16/2011
Name (Print/Typed) Glen M. Kellett	Registration Number 60,202

Note: *Signatures of all the inventors or assignees of record of the entire interest or their representative(s) are required in accordance with 37 CFR 1.33 and 11.18. Please see 37 CFR 1.4(d) for the form of the signature. If necessary, submit multiple forms for more than one signature, see below*.*

☐ *Total of _____ forms are submitted.

If you need assistance in completing the form, call 1-800-PTO-9199 and select option 2.

UNITED STATES PATENT AND TRADEMARK OFFICE

UNITED STATES DEPARTMENT OF COMMERCE
United States Patent and Trademark Office
Address: COMMISSIONER FOR PATENTS
P.O. Box 1450
Alexandria, Virginia 22313-1450
www.uspto.gov

APPLICATION NO.	FILING DATE	FIRST NAMED INVENTOR	ATTORNEY DOCKET NO.	CONFIRMATION NO.
13/180,176	07/11/2011	Patrick Chapman	39605-214950	1946

23643 7590 07/28/2011

BARNES & THORNBURG LLP
11 SOUTH MERIDIAN
INDIANAPOLIS, IN 46204

EXAMINER	
ART UNIT	PAPER NUMBER
2838	

NOTIFICATION DATE	DELIVERY MODE
07/28/2011	ELECTRONIC

Please find below and/or attached an Office communication concerning this application or proceeding.

The time period for reply, if any, is set in the attached communication.

Notice of the Office communication was sent electronically on above-indicated "Notification Date" to the following e-mail address(es):

indocket@btlaw.com

UNITED STATES PATENT AND TRADEMARK OFFICE

Commissioner for Patents
United States Patent and Trademark Office
P.O. Box 1450
Alexandria, VA 22313-1450
www.uspto.gov

BARNES & THORNBURG LLP
11 SOUTH MERIDIAN
INDIANAPOLIS IN 46204

In re Application of	:	
Patrick CHAPMAN	:	DECISION ON PETITION
Application No. 13/180176	:	TO MAKE SPECIAL UNDER
Filed: July 11, 2011	:	THE GREEN TECHNOLOGY
Attorney Docket No. 39605-214950	:	PILOT PROGRAM

This is a decision on the petition under 37 CFR 1.102, filed on July 16, 2011, to make the above-identified application special under the pilot program for applications pertaining to Green Technologies as set forth 74 Federal Register Notice 64666 (December 8, 2009) and amended by 75 Federal Register Notice 28554 (May 21, 2010) and 75 Federal Register Notice 69049 (November 10, 2010).

The petition is **DISMISSED**.

If reconsideration of this decision is desired, a petition for reconsideration must be filed within ONE (1) MONTH OR THIRTY (30) DAYS from the mail date of this decision, whichever is longer. No extension of this time limit can be granted under 37 CFR 1.136(a) or (b). The petition for reconsideration should include an exhaustive attempt to provide the lacking item(s) noted below, since, after a decision on the petition for reconsideration, no further reconsideration or review of the matter will be undertaken by the Director.

A grantable petition to make an application special under 37 CFR 1.102 and the pilot program as set forth in 74 FR 64666 must be directed to a nonprovisional application filed under 35 USC 111(a) or be a national stage entry under 35 USC 371, exclusive of any reissue applications and be filed prior to the date of the notice, December 8, 2009.

In order to qualify for special status, the following requirements must be met. 1) The application must have no more than 3 independent claims and no more than 20 total claims. 2) The application must not contain any multiple dependent claims. 3) The petition must state the basis for seeking special status, i.e., the claimed invention either: A) materially enhances the quality of the environment or B) materially contributes to: i) the discovery or development of renewable energy resources, ii) the more efficient utilization and conservation of energy resources, or iii) greenhouse gas emission reduction. 4) If the disclosure is not clear on its face that the claimed invention materially contributes under category (A) or (B), the petition must be accompanied by

a statement by the applicant, assignee, or an attorney/agent registered to practice before the Office explaining how the materiality standard is met. 5) A statement that applicant will agree to make an election without traverse in a telephonic interview if a restriction requirement is made by the examiner. 6) The petition to make special must be filed electronically. 7) The petition must be filed at least one day prior to the date that a first Office Action appears in the Patent Application Information Retrieval (PAIR) system. 8) The petition must be accompanied by a request for early publication in compliance with 37 CFR 1.219 and include the publication fee as set forth in 37 CFR 1.18(d).

The requirement for a fee for consideration of the petition to make special for applications pertaining to Green Technologies has been waived.

The petition lacks item 4.

In regard to item 4, applicant's statement pertaining to how the materiality standard is met does not satisfy the requirements for this pilot. The instant petition includes a statement identifying the basis for the special status as contributing to the development of renewable energy resources or energy conservation. The materiality standard does not permit an applicant to speculate as to how a hypothetical end-user might specially apply the invention in a manner that could contribute to the development of renewable resources or energy conservation. Any argument that the claimed invention can be used with solar panels would be considered speculate as to how a hypothetical end-user might specially apply the claimed invention.

Any reconsideration of this decision should be submitted through the USPTO electronic filing system, EFS-Web, and selecting the document description of "Petition for Green Tech Pilot" on the EFS-Web screen.

Telephone inquiries concerning this decision should be directed to Colleen Dunn at 571-272-1170.

The application is being forwarded to the appropriate Technology Center Art Unit for action on the merits commensurate with this decision.

FOR

Colleen Dunn
Quality Assurance Specialist
Technology Center 2800

IN THE UNITED STATES PATENT AND TRADEMARK OFFICE

Application No.:	13/180,176
Confirmation No.:	1946
Art Unit:	2838
Examiner:	Unknown
Application Title:	METHOD AND DEVICE FOR CONTROLLING A CONFIGURABLE POWER SUPPLY
First Named Applicant:	Patrick Chapman
Filed:	07/11/2011
Attorney Docket:	39605-214950

ELECTRONICALLY SUBMITTED ON:

AUGUST 28, 2011

PETITION FOR RECONSIDERATION OF PETITION TO MAKE SPECIAL UNDER THE GREEN TECHNOLOGY PILOT PROGRAM

MAIL STOP PETITION
Commissioner for Patents
P. O. Box 1450
Alexandria, VA 22313-1450

Sir:

Petitioner respectfully requests reconsideration of the Petition filed under 37 C.F.R. § 1.102 on July 16, 2011 requesting the present application be made special under the pilot program for applications pertaining to Green Technologies as set forth in the 74 Federal Register Notice 64666 (December 8, 2009) and amended by 74 Federal Register Notice 28554 (May 21, 2010) and 75 Federal Register Notice 69049 (November 10, 2010). For the reasons set-forth below, Petitioner believes the present application materially contributes to the development of renewable energy resources. Accordingly, Petitioner respectfully requests the

Office grant this petition to make the present application special under the Green Technology Pilot Program. A copy of the previously filed Petition to Make Special Under the Green Technology Pilot Program, filed on July 16, 2011, is included herein as Exhibit A; a copy of the accompanying Statements of Special Status, filed on July 16, 2011, is included herein as Exhibit B; and a copy of a Preliminary Amendment filed contemporaneously with this Petition for Reconsideration is included herein as Exhibit C to assist in the determination of the present petition.

I. BACKGROUND

Petitioner filed U.S. Patent Application Serial No. 13/180,176, entitled "METHOD AND DEVICE FOR CONTROLLING A CONFIGURABLE POWER SUPPLY," on July 11, 2011. Shortly thereafter, on July 16, 2011, Petitioner prepared and filed a Petition to Make Special Under the Green Technology Pilot Program with accompanying Statements of Special Status, on July 16, 2011. In those Statements of Special Status, Petitioner asserted that:

> The present application materially contributes to the development of renewable energy resources by disclosing a method, system, and device for converting direct current (DC) power from a renewable energy source (e.g., a solar panel) to an alternating current (AC) power or DC power for supplying energy to a power sink such as an AC grid, AC load, DC load, or the like. Embodiments of the present application disclose a method for controlling a configurable power supply couplable to a renewable energy source, such as a photovoltaic module, to receive a DC power input therefrom. The method comprises modifying a circuit topology of the configurable power supply to configure the power supply for coupling with one of a DC or AC electronic accessory device. As such, the disclosed method and associated device facilitates the use of a configurable power supply with various different electronic accessory devices as needed for a particular implementation. Such configurability is believed to increase the flexibility, use, and application of the associated renewable energy source. Accordingly, for at least these reasons, Applicants respectfully submit that the present application materially contributes to the development of renewable energy resources.

Petitioner believes such statement is clearly support by Petitioner's patent application disclosure. Specifically, as shown in FIG. 1, Petitioner's application discloses a modular photovoltaic power supply assembly 100, which includes a PV module 102 and a configurable power supply circuit 110. The PV module 102 includes a plurality of solar cells configured to generate a power output in response to receiving an amount of sunlight. The configurable power supply circuit 110 is electrically coupled to the output of the solar cells of the PV module 102 to receive a power supply input therefrom. The configurable power supply 110 is configurable to a first circuit topology to convert the power supply input received from the plurality of solar cells of the PV module 102 to a DC power output or a second circuit topology to convert the power supply input received from the plurality of solar cells to an AC power output. For example, Petitioner's disclosure provides:

> [T]he configurable power supply circuit 110 includes an input converter 202 and an input controller 204 electrically coupled to the input converter 202 and configured to control the operation of the input converter 202 as discussed below. *The input converter 202 includes a DC input 206 electrically coupled to the DC source 200 of the PV module 102 (i.e., to the output of the solar cells of the PV module 102) to receive a DC power input signal therefrom and generate a power output based on an internal circuit topology of the input converter 202.* That is, as discussed in more detail below, the input converter 202 is configurable to one of a plurality of circuit topologies or configurations based on, for example, the desired type of output of the input converter 202 or the type of electronic accessory device 120 to be used with the configurable power supply circuit 110.

Petitioner's Specification, Para. [0044]. As such, Petitioner respectfully submits that, as stated in the July 16, 2011 Statements of Special Status, Petitioners application contributes to the development of renewable energy resources by disclosing a novel and unobvious method, system, and device for converting a power input received from a plurality of solar cells of a PV module, which is a renewable energy source, to a selectable DC or AC power output to supply

energy to a power sink such as an AC grid, AC load, DC load, or the like. Accordingly, Petitioners believe that the July 16, 2011 statements of Special Status are properly supported by Petitioner's application disclosure.

In response to Petitioner's Petition to Make Special Under the Green Technology Pilot Program and associated accompanying Statements of Special Status filed on July 16, 2011, the Office issued a Decision on Petition To Make Special Under the Green Technology Pilot Program on July 28, 2011 dismissing Petitioner's original petition. In that Decision, the Office found that:

> The petition lacks item 4.
>
> In regard to item 4, applicant's statement pertaining to how the materiality standard is met does not satisfy the requirements for this pilot. The instant petition includes a statement identifying the basis for the special status as contributing to the development of renewable energy resources or energy conservation. The materiality standard does not permit an applicant to speculate as to how a hypothetical end-user might specially apply the invention in a manner that could contribute to the development of renewable resources or energy conservation. Any argument that the claimed invention can be used with solar panels would be considered speculate as to how a hypothetical end-user might specially apply the claimed invention.

07/28/2011 Decision on Petition To Make Special Under the Green Technology Pilot Program, Page 2. As such, it appears that, although Petitioner's specification clearly provides that the disclosed method, system, and device contribute to the development of renewable energy resources, the Office found Petitioner's pending claims did not explicitly tie the claimed invention to renewable energy resources.

In response to the 07/28/2011 Decision, Petitioner's have filed a Preliminary Amendment to clarify the nature of the claimed invention. In light of that Preliminary

Amendment and the discussion below, Petitioner respectfully requests the Office grant this petition to make the present application special under the Green Technology Pilot Program.

II. PRELIMINARY AMENDMENT

Petitioner has submitted a Preliminary Amendment contemporaneously with the filing of the present Petition for Reconsideration. A copy of that Preliminary Amendment is attached hereto as Exhibit C to assist in the determination of the present petition. In that Preliminary Amendment, Petitioner has amended the pending claims to clarify that the claimed invention is related to a configurable power supply electrically coupled to a photovoltaic module, which includes a plurality of solar cells, to receive a power supply input from the photovoltaic module and generate a power output therefrom.

Specifically, independent claim 1 has been amended to recite "a method for controlling a *photovoltaic power supply assembly comprising a photovoltaic module and a* configurable power supply *electrically coupled to the photovoltaic module*, the method comprising . . . modifying a circuit topology of the configurable power supply to a first circuit topology to *convert a power supply input received from the photovoltaic module to* a DC power output to the DC electric accessory, and . . . modifying the circuit topology of the configurable power supply to a second circuit topology to *convert a power supply input received from the photovoltaic module to* an AC power output to the AC electric accessory." Similarly, independent claim 11 has been amended to recite "[a] *photovoltaic* configurable power supply comprising: an input converter having an input to receive a direct current (DC) power input *from a photovoltaic module*, the input converter being selectively configurable between a first circuit topology to *convert a power supply input received from the photovoltaic module to* a DC power output and a second circuit topology to *convert a power supply input received from the*

photovoltaic module to an AC power output based on a control signal." Additionally, independent claim 19 has been amended to recite "[a] method for controlling a *photovoltaic power supply assembly comprising a photovoltaic module and a* configurable power supply *electrically coupled to the photovoltaic module*."

Accordingly, Petitioner respectfully submits that the pending claims recite methods and devices that materially contribute to the development of renewable energy resources by claiming a configurable power supply configured to receive a power input from a photovoltaic module and generate a power output based thereon. Such methods and devices are useful in the generation of power from solar energy, which is a renewable energy resource.

III. STATEMENT OF MATERIALITY STANDARD

In light of the Preliminary Amendment filed contemporaneously with this Petition for Reconsideration, Petitioner respectfully submits the following renewed Statement of Materiality Standard in support of the originally filed Petition To Make Special Under the Green Technology Pilot Program:

The claimed invention contributes to the development of renewable energy resources by disclosing a method, system, and device for converting direct current (DC) power received from a photovoltaic module (i.e., a renewable energy source) to an alternating current (AC) power or DC power for supplying energy to a power sink such as an AC grid, AC load, DC load, or the like. The claimed invention relates to a method for controlling a configurable power supply electrically coupled to a photovoltaic module to receive a DC power input therefrom. The method comprises modifying a circuit topology of the configurable power supply to configure the power supply for coupling with one of a DC or AC electronic accessory device. As such, the disclosed method and associated device facilitates the use of a configurable power

supply with various different electronic accessory devices as needed for a particular implementation. Such configurability is believed to increase the flexibility, use, and application of the solar energy received from the photovoltaic module. Accordingly, for at least these reasons, Applicants respectfully submit that the present application materially contributes to the development of renewable energy resources.

IV. CONCLUSION

For the reasons discussed above, Petitioner respectfully submits that the present application and claimed invention materially contribute to the development of renewable energy resources. Accordingly, Petitioner respectfully requests the Office grant this petition to make the present application special under the Green Technology Pilot Program.

Applicants believe that no fee is due in connection with the filing of this Petition for Reconsideration. However, should any fee be due, the Commissioner is hereby authorized to charge any such fee, and any shortages of fees that may be due, and credit any overpayment of fees to the Account of Barnes & Thornburg, Deposit Account No. 10-0435, with reference to our matter 39605-214950.

Respectfully submitted,

/Glen Kellett/

Glen M. Kellett
Registration No. 60,202
Barnes & Thornburg
11 South Meridian Street
Indianapolis, Indiana 46204-3535
Telephone: (317) 261-7959
Fax: (317) 231-7433

EXHIBIT A

Doc Code: PET.GREEN
Document Description: Petition for Green Tech Pilot

PTO/SB/420 (03-11)

PETITION TO MAKE SPECIAL UNDER THE GREEN TECHNOLOGY PILOT PROGRAM

Attorney Docket Number: 39605-214950	Application Number (if known): 13/180,176	Filing date: 07/11/2011

First Named Inventor: Patrick Chapman

Title: METHOD AND DEVICE FOR CONTROLLING A CONFIGURABLE POWER SUPPLY

APPLICANT HEREBY REQUESTS TO PARTICIPATE IN THE GREEN TECHNOLOGY PILOT PROGRAM FOR THE ABOVE-IDENTIFIED APPLICATION. See Instruction Sheet on page 2.

This petition must be timely filed electronically using the USPTO electronic filing system, EFS-Web.

1. By filing this petition:

   Applicant is requesting early publication: Applicant hereby requests early publication under 37 CFR 1.219 and the publication fee set forth in 37 CFR 1.18(d) accompanies this request.

2. By filing this petition: applicant is agreeing to make an election without traverse in a telephonic interview and elect an invention that meets the eligibility requirements for the Green Technology Pilot Program, if the Office determines that the claims are not obviously directed to a single invention. See Instruction Sheet.

3. This request is accompanied by statements of special status for the eligibility requirement.

4. The application contains no more than three (3) independent claims and twenty (20) total claims.

5. The application does not contain any multiple dependent claims.

6. Other attachments: STATEMENTS OF SPECIAL STATUS

Signature /Glen M. Kellett/	Date 07/16/2011
Name (Print/Typed) Glen M. Kellett	Registration Number 60,202

Note: *Signatures of all the inventors or assignees of record of the entire interest or their representative(s) are required in accordance with 37 CFR 1.33 and 11.18. Please see 37 CFR 1.4(d) for the form of the signature. If necessary, submit multiple forms for more than one signature, see below*.*

☐ *Total of _____ forms are submitted.

If you need assistance in completing the form, call 1-800-PTO-9199 and select option 2.

Instruction Sheet for
Petition to Make Special Under the Green Technology Pilot Program

(Not to be Submitted to the USPTO)

The following is a summary of the requirements (for more information see the notices (i) "Pilot Program for Green Technologies Including Greenhouse Gas Reduction," (ii) "Elimination of Classification Requirement in the Green Technology Pilot Program," and (iii) "Expansion and Extension of the Green Technology Pilot Program," available on the USPTO web site at http://www.uspto.gov/patents/init_events/green_tech.jsp):

(1) The application must be a non-reissue, non-provisional utility application filed under 35 U.S.C. 111(a), or an international application that has entered the national stage in compliance with 35 U.S.C. 371, irrespective of the filing date of the application. Reexamination proceedings are excluded from this pilot program.

(2) The application must contain three or fewer independent claims and twenty or fewer total claims. The application must not contain any multiple dependent claims. For an application that contains more than three independent claims or twenty total claims, or multiple dependent claims, applicant must file a preliminary amendment in compliance with 37 CFR 1.121 to cancel the excess claims and/or the multiple dependent claims at the time the petition to make special is filed.

(3) The claims must be directed to a single invention that materially enhances the quality of the environment, or that materially contributes to: (1) the discovery or development of renewable energy resources; (2) the more efficient utilization and conservation of energy resources; or (3) green house gas emission reduction (see the eligibility requirements of sections II and III of the notice (i) cited above). The petition must include a statement that, if the USPTO determines that the claims are directed to multiple inventions (e.g., in a restriction requirement), applicant will agree to make an election without traverse in a telephonic interview, and elect an invention that meets the eligibility requirements in section II or III of the notice (i) cited above.

(4) The petition to make special must be timely filed electronically using the USPTO electronic filing system, EFS-Web, and selecting the document description of "Petition for Green Tech Pilot" on the EFS-Web screen. Applicant should use form PTO/SB/420, which is available as a Portable Document Format (PDF) fillable form in EFS-Web and on the USPTO Web site.

(5) The petition to make special must be filed at least one day prior to the date that a first Office action (which may be an Office action containing only a restriction requirement) appears in the Patent Application Information Retrieval (PAIR) system. Applicant may check the status of the application using PAIR.

(6) The petition to make special must be accompanied by a request for early publication in compliance with 37 CFR 1.219 and the publication fee set forth in 37 CFR 1.18(d).

Privacy Act Statement

The **Privacy Act of 1974 (P.L. 93-579)** requires that you be given certain information in connection with your submission of the attached form related to a patent application or patent. Accordingly, pursuant to the requirements of the Act, please be advised that: (1) the general authority for the collection of this information is 35 U.S.C. 2(b)(2); (2) furnishing of the information solicited is voluntary; and (3) the principal purpose for which the information is used by the U.S. Patent and Trademark Office is to process and/or examine your submission related to a patent application or patent. If you do not furnish the requested information, the U.S. Patent and Trademark Office may not be able to process and/or examine your submission, which may result in termination of proceedings or abandonment of the application or expiration of the patent.

The information provided by you in this form will be subject to the following routine uses:

1. The information on this form will be treated confidentially to the extent allowed under the Freedom of Information Act (5 U.S.C. 552) and the Privacy Act (5 U.S.C 552a). Records from this system of records may be disclosed to the Department of Justice to determine whether disclosure of these records is required by the Freedom of Information Act.
2. A record from this system of records may be disclosed, as a routine use, in the course of presenting evidence to a court, magistrate, or administrative tribunal, including disclosures to opposing counsel in the course of settlement negotiations.
3. A record in this system of records may be disclosed, as a routine use, to a Member of Congress submitting a request involving an individual, to whom the record pertains, when the individual has requested assistance from the Member with respect to the subject matter of the record.
4. A record in this system of records may be disclosed, as a routine use, to a contractor of the Agency having need for the information in order to perform a contract. Recipients of information shall be required to comply with the requirements of the Privacy Act of 1974, as amended, pursuant to 5 U.S.C. 552a(m).
5. A record related to an International Application filed under the Patent Cooperation Treaty in this system of records may be disclosed, as a routine use, to the International Bureau of the World Intellectual Property Organization, pursuant to the Patent Cooperation Treaty.
6. A record in this system of records may be disclosed, as a routine use, to another federal agency for purposes of National Security review (35 U.S.C. 181) and for review pursuant to the Atomic Energy Act (42 U.S.C. 218(c)).
7. A record from this system of records may be disclosed, as a routine use, to the Administrator, General Services, or his/her designee, during an inspection of records conducted by GSA as part of that agency's responsibility to recommend improvements in records management practices and programs, under authority of 44 U.S.C. 2904 and 2906. Such disclosure shall be made in accordance with the GSA regulations governing inspection of records for this purpose, and any other relevant (*i.e.*, GSA or Commerce) directive. Such disclosure shall not be used to make determinations about individuals.
8. A record from this system of records may be disclosed, as a routine use, to the public after either publication of the application pursuant to 35 U.S.C. 122(b) or issuance of a patent pursuant to 35 U.S.C. 151. Further, a record may be disclosed, subject to the limitations of 37 CFR 1.14, as a routine use, to the public if the record was filed in an application which became abandoned or in which the proceedings were terminated and which application is referenced by either a published application, an application open to public inspection or an issued patent.
9. A record from this system of records may be disclosed, as a routine use, to a Federal, State, or local law enforcement agency, if the USPTO becomes aware of a violation or potential violation of law or regulation.

EXHIBIT B

BARNES & THORNBURG LLP

11 South Meridian Street
Indianapolis, Indiana 46204
(317) 236-1313
(317) 231-7433 Fax

IN THE UNITED STATES PATENT AND TRADEMARK OFFICE

Application No.:	13/180,176
Confirmation No.:	1946
Art Unit:	UNKNOWN
Examiner:	UNKNOWN
Application Title:	METHOD AND DEVICE FOR CONTROLLING A CONFIGURABLE POWER SUPPLY
First Named Applicant:	Patrick Chapman
Filed:	07/11/2011
Attorney Docket:	39605-214950

ELECTRONICALLY SUBMITTED ON:

JULY 16, 2011

STATEMENTS OF SPECIAL STATUS FOR ELIGIBILITY OF GREEN TECHNOLOGY PILOT PROGRAM

Mail Stop PETITIONS
Commissioner of Patents
P.O. Box 1450
Alexandria, Virginia 22313-1450

Sir:

In furtherance of a contemporaneously filed Petition to Make Special Under the Green Technology Pilot Program, Applicants respectfully submit the following:

STATEMENTS IN SUPPORT OF PETITION, which begin on page 2 of this paper.

STATEMENTS IN SUPPORT OF PETITION TO MAKE SPECIAL

Applicants respectfully submit the following statements in support of a contemporaneously-filed Petition to Make Special Under the Green Technology Pilot Program.

STATEMENT OF BASIS FOR SPECIAL STATUS

Applicants respectfully submit that U.S. Patent Application Serial No. 13/180,176, entitled "Method and Device for Controlling a Configurable Power Supply," materially contributes to the development of renewable energy resources.

STATEMENT OF MATERIALITY STANDARD

The present application materially contributes to the development of renewable energy resources by disclosing a method, system, and device for converting direct current (DC) power from a renewable energy source (e.g., a solar panel) to an alternating current (AC) power or DC power for supplying energy to a power sink such as an AC grid, AC load, DC load, or the like. Embodiments of the present application disclose a method for controlling a configurable power supply couplable to a renewable energy source, such as a photovoltaic module, to receive a DC power input therefrom. The method comprises modifying a circuit topology of the configurable power supply to configure the power supply for coupling with one of a DC or AC electronic accessory device. As such, the disclosed method and associated device facilitates the use of a configurable power supply with various different electronic accessory devices as needed for a particular implementation. Such configurability is believed to increase the flexibility, use, and application of the associated renewable energy source. Accordingly, for at least these reasons, Applicants respectfully submit that the present application materially contributes to the development of renewable energy resources.

STATEMENT OF AGREEMENT TO ELECTION WITHOUT TRAVERSE

Should the Office determine that the claims of the present application are not obviously directed to a single invention, Applicants agree to make an election without traverse in a telephonic interview and elect an invention that meets the eligibility requirements for the Green Technology Pilot Program.

REQUEST FOR EARLY PUBLICATION UNDER 37 CFR § 1.219

Applicants hereby respectfully request early publication under 37 C.F.R. § 1.219. The publication fee set forth in 37 C.F.R. § 1.18(d) accompanies this request.

CONCLUSION

Applicants respectfully request acceptance of the Petition to Make Special Under the Green Technology Pilot Program. Applicants hereby authorize the Commissioner to charge any fees that may be due in connection with the filing of this petition and any shortage of fees, and credit any overpayment of fees, to the Account of Barnes & Thornburg, Deposit Account No. 10-0435 with reference to file 39605-214950.

Respectfully submitted,

Glen M. Kellett
Registration No. 60,202
Barnes & Thornburg LLP
11 South Meridian Street
Indianapolis, Indiana 46204-3335
Telephone: (317) 261-7959
Fax: (317) 231-7433

EXHIBIT C

BARNES & THORNBURG LLP
11 South Meridian Street
Indianapolis, Indiana 46204

IN THE UNITED STATES PATENT AND TRADEMARK OFFICE

Application No.:	13/180,176
Confirmation No.:	1946
Art Unit:	2838
Examiner:	Unknown
Application Title:	METHOD AND DEVICE FOR CONTROLLING A CONFIGURABLE POWER SUPPLY
First Named Applicant:	Patrick Chapman
Filed:	07/11/2011
Attorney Docket:	39605-214950

ELECTRONICALLY SUBMITTED ON:

AUGUST 28, 2011

PRELIMINARY AMENDMENT

MAIL STOP AMENDMENT
Commissioner for Patents
P. O. Box 1450
Alexandria, VA 22313-1450

Sir:

Prior to the examination of the above-identified patent application, Applicants respectfully request entry and consideration of the following:

Amendments to the Specification, which begin on page **2**;

Amendments to the Claims, which begin on page **3;** and

Remarks, which begin on page **9**.

AMENDMENTS TO THE SPECIFICATION

I. Please replace Paragraph [0002] with the following paragraph:

[0002] Cross-reference is also made to U.S. Utility Patent Application Serial No. ~~XX/XXX,XXX~~ 13/180,170 entitled "CONFIGURABLE POWER SUPPLY ASSEMBLY" by Patrick Chapman, which was filed on July ~~XX~~ 11, 2011 and to U.S. Utility Patent Application Serial No. ~~XX/XXX,XXX~~ 13/180,168 entitled "MODULAR PHOTOVOLTAIC POWER SUPPLY ASSEMBLY" by Patrick Chapman et al., which was filed on July ~~XX~~ 11, 2011.

AMENDMENTS TO THE CLAIMS

1. (Currently Amended) A method for controlling a photovoltaic power supply assembly comprising a photovoltaic module and a configurable power supply electrically coupled to the photovoltaic module, the method comprising:

determining (i) whether a direct current (DC) electric accessory has been electrically connected to the configurable power supply and (ii) whether an alternating current (AC) electric accessory has been inductively coupled to the configurable power supply;

in response to determining that the DC electric accessory has been electrically connected, modifying a circuit topology of the configurable power supply to a first circuit topology to ~~generate~~ convert a power supply input received from the photovoltaic module to a DC power output to the DC electric accessory, and

in response to determining that the AC electric accessory has been inductively coupled to the configurable power supply, modifying the circuit topology of the configurable power supply to a second circuit topology to ~~generate~~ convert a power supply input received from the photovoltaic module to an AC power output to the AC electric accessory.

2. (Original) The method of claim 1, wherein determining whether the DC electric accessory has been electrically connected to the configurable power supply comprises sensing a DC output current at a DC output of the configurable power supply.

3. (Original) The method of claim 1, wherein determining whether the DC electric accessory has been electrically connected to the configurable power supply comprises

receiving a control signal indicating that the DC electric accessory has been electrically connected to the configurable power supply.

4. (Original) The method of claim 1, wherein determining whether the DC electric accessory has been electrically connected to the configurable power supply comprises determining a state of a physical switch.

5. (Original) The method of claim 1, wherein determining whether the AC electric accessory has been electrically connected to the configurable power supply comprises sensing an AC output current at an AC output of the configurable power supply.

6. (Original) The method of claim 1, wherein determining whether the AC electric accessory has been electrically connected to the configurable power supply comprises determining whether a primary coil of the configurable power supply is inductively coupled to a secondary coil of an internal electronic circuit of the AC electric accessory.

7. (Original) The method of claim 1, wherein modifying the circuit topology of the configurable power supply comprises controlling a state of an electronic switch of the configurable power supply.

8. (Original) The method of claim 7, wherein modifying the circuit topology of the configurable power supply comprises controlling a state of a plurality of electronic switches of an H-bridge of the configurable power supply.

9. (Original) The method of claim 1, wherein:

modifying the circuit topology of the configurable power supply to the first circuit topology comprises modifying the circuit topology of the configurable power supply to form a buck-boost converter, and

modifying the circuit topology of the configurable power supply to the second circuit topology comprises modifying the circuit topology of the configurable power supply to form a DC-AC inverter circuit.

10. (Original) The method of claim 9, further comprising modifying the circuit topology to a third circuit topology to form a pass-through circuit to pass a DC power input received by the configurable power supply to a DC output of the configurable power supply with substantially no processing.

11. (Currently Amended) A photovoltaic configurable power supply comprising:

an input converter having an input to receive a direct current (DC) power input from a photovoltaic module, the input converter being selectively configurable between a first circuit topology to ~~generate~~ convert a power supply input received from the photovoltaic module to a DC power output and a second circuit topology to ~~generate~~ convert a power supply input received from the photovoltaic module to an AC power output based on a control signal; and

an input controller electrically connected to the input converter, the input controller comprising a processor and a memory, the memory comprising a plurality of instructions, which when executed by the processor, cause the input controller to:

determine (i) whether a direct current (DC) electric accessory has been electrically connected to the input converter and (ii) whether an alternating current (AC) electric accessory has been inductively coupled to the input converter,

in response to determining that the DC electric accessory has been electrically connected to the input converter, modify the circuit topology of the input converter to the first circuit topology, and

in response to determining that the AC electric accessory has been inductively coupled to the input converter, modify the circuit topology of the input converter to the second circuit topology.

12. (Original) The configurable power supply of claim 11, wherein to determine whether the DC electric accessory has been electrically connected to the input converter comprises to determine whether a sensed DC output current of the input converter is above a predetermined threshold value.

13. The configurable power supply of claim 11, wherein to determine whether the DC electric accessory has been electrically connected to the input converter comprises to determine a state of a physical switch.

14. (Original) The configurable power supply of claim 11, wherein to determine whether the AC electric accessory has been electrically connected to the input converter comprises to determine whether a sensed AC output current of the input converter is above a predetermined threshold value.

15. (Original) The configurable power supply of claim 11, wherein to determine whether the AC electric accessory has been electrically connected to the input converter comprises to determine whether a primary coil of the input converter is inductively coupled to a secondary coil of an internal electronic circuit of the AC electric accessory.

16. The configurable power supply of claim 11, wherein to modify the circuit topology of the input converter comprises to control a state of an electronic switch of the input converter.

17. (Original) The configurable power supply of claim 11, wherein:

to modify the circuit topology of the input converter to the first circuit topology comprises to modify the circuit topology of the input converter to form a buck-boost converter, and

to modify the circuit topology of the configurable power supply to the second circuit topology comprises to modify the circuit topology of the input converter to form a DC-AC inverter circuit.

18. (Original) The configurable power supply of claim 17, wherein the plurality of instructions, which when executed by the processor, further cause the input controller to modify the circuit topology of the input converter to a third circuit topology to form a pass-through circuit to pass the DC power input to a DC output of the configurable power supply with substantially no processing.

19. (Currently Amended) A method for controlling a photovoltaic power supply assembly comprising a photovoltaic module and a configurable power supply electrically coupled to the photovoltaic module, the method comprising:

determining (i) whether a direct current (DC) electric accessory has been electrically connected to the configurable power supply and (ii) whether an alternating current (AC) electric accessory has been inductively coupled to the configurable power supply;

in response to determining that the DC electric accessory has been electrically connected, modifying a circuit topology of the configurable power supply to form a buck-boost DC converter to deliver an amount of DC power to the DC electric accessory, and

in response to determining that the AC electric accessory has been inductively coupled to the configurable power supply, modifying the circuit topology of the configurable power supply to form a DC-AC inverter circuit to deliver an amount of AC power to the AC electric accessory.

20. (Original) The method of claim 19, further comprising:

in response to determining that the DC electric accessory has been electrically connected, modifying the circuit topology of the configurable power supply to form a DC pass-through circuit based on a state of an electronic switch.

REMARKS

Applicants thank the Examiner for consideration of the present application. The present application was filed with claims 1-20. Applicants have amended each of independent claims 1, 11, and 19 to clarify that the presently claimed invention relates to the generation of solar power, a renewable energy resource. Applicants believe that no new matter is being added by those amendments. With entry of the foregoing amendments, the application is believed to be in condition for examination. Consideration of the claims, leading to their allowance and passage of the application to issuance, is respectfully requested.

Applicants believe that no fees are required with this amendment. If any fees are required, it is respectfully requested that such fees and any overpayment of fees, be charged to the Account of Barnes & Thornburg, Deposit Account No. 10-0435, with reference to our matter 39605-214950.

Respectfully submitted,

/Glen Kellett/

Glen M. Kellett
Registration No. 60,202
Barnes & Thornburg
11 South Meridian Street
Indianapolis, Indiana 46204-3535
Telephone: (317) 261-7959
Fax: (317) 231-7433

UNITED STATES PATENT AND TRADEMARK OFFICE

UNITED STATES DEPARTMENT OF COMMERCE
United States Patent and Trademark Office
Address: COMMISSIONER FOR PATENTS
P.O. Box 1450
Alexandria, Virginia 22313-1450
www.uspto.gov

APPLICATION NO.	FILING DATE	FIRST NAMED INVENTOR	ATTORNEY DOCKET NO.	CONFIRMATION NO.
13/180,176	07/11/2011	Patrick Chapman	39605-214950	1946

23643 7590 10/03/2011
BARNES & THORNBURG LLP
11 SOUTH MERIDIAN
INDIANAPOLIS, IN 46204

EXAMINER	
LEWIS, MONICA	

ART UNIT	PAPER NUMBER
2838	

NOTIFICATION DATE	DELIVERY MODE
10/03/2011	ELECTRONIC

Please find below and/or attached an Office communication concerning this application or proceeding.

The time period for reply, if any, is set in the attached communication.

Notice of the Office communication was sent electronically on above-indicated "Notification Date" to the following e-mail address(es):

indocket@btlaw.com

UNITED STATES PATENT AND TRADEMARK OFFICE

Commissioner for Patents
United States Patent and Trademark Office
P.O. Box 1450
Alexandria, VA 22313-1450
www.uspto.gov

BARNES & THORNBURG LLP
11 SOUTH MERIDIAN
INDIANAPOLIS IN 46204

OCT 0 3 2011

In re Application of	:	
Chapman	:	DECISION ON PETITION
Application No. 13/180,176	:	TO MAKE SPECIAL UNDER
Filed: 7/11/2011	:	THE GREEN TECHNOLOGY
Attorney Docket No. **39605-214950**	:	PILOT PROGRAM

This is a decision on the request for reconsideration, filed 8/28/2011, to make the above-identified application special under the pilot program for applications pertaining to Green Technologies as set forth in 74 Federal Register Notice 64666 (December 8, 2009) and amended by 75 Federal Register Notice 28554 (May 21, 2010) and 75 Federal Register Notice 69049 (November 10, 2010).

The petition is **GRANTED**.

A grantable petition to make an application special under 37 CFR 1.102 and the pilot program as set forth in 74 FR 64666 must be directed to a nonprovisional application filed under 35 USC 111(a) or be a national stage entry under 35 USC 371, exclusive of any reissue applications.

In order to qualify for special status, the following requirements must be met. 1) The application must have no more than 3 independent claims and no more than 20 total claims. 2) The application must not contain any multiple dependent claims. 3) The petition must state the basis for seeking special status, i.e., the claimed invention either: A) materially enhances the quality of the environment or B) materially contributes to: i) the discovery or development of renewable energy resources, ii) the more efficient utilization and conservation of energy resources, or iii) greenhouse gas emission reduction. 4) If the disclosure is not clear on its face that the claimed invention materially contributes under category (A) or (B), the petition must be accompanied by a statement by the applicant, assignee, or an attorney/agent registered to practice before the Office explaining how the materiality standard is met. 5) A statement that applicant will agree to make an election without traverse in a telephonic interview if a restriction requirement is made by the examiner. 6) The petition to make special must be filed electronically. 7) The petition must be filed at least one day prior to the date that a first Office Action appears in the Patent Application Information Retrieval (PAIR) system. 8) The petition must be accompanied by a request for early publication in compliance with 37 CFR 1.219 and include the publication fee as set forth in 37 CFR 1.18(d).

The requirement for a fee for consideration of the petition to make special for applications pertaining to Green Technologies has been waived.

The instant petition complies with items 1 – 8 above. Accordingly, the above-identified application has been accorded "special" status.

Telephone inquires concerning this decision should be directed to Tom Dunn at 571-272-1171.

The application is being forwarded to the Technology Center Art Unit 2838 for action on the merits commensurate with this decision.

/Tom Dunn/

Tom Dunn
Quality Assurance Specialist
Technology Center 1700

Doc Code: PET.GREEN
Document Description: Petition for Green Tech Pilot

PTO/SB/420 (05-10)
Approved for use through 01/31/2011. OMB 0651-0062
U.S. Patent and Trademark Office; U. S. DEPARTMENT OF COMMERCE
Under the Paperwork Reduction Act of 1995, no persons are required to respond to a collection of information unless it displays a valid OMB control number.

PETITION TO MAKE SPECIAL UNDER THE GREEN TECHNOLOGY PILOT PROGRAM

Attorney Docket Number: 40737US1	Application Number (if known):	Filing date: 11 July 2011

First Named Inventor: Alfred E. Keller

Title: SULFUR DEGASSING PROCESS

APPLICANT HEREBY REQUESTS TO PARTICIPATE IN THE GREEN TECHNOLOGY PILOT PROGRAM FOR THE ABOVE-IDENTIFIED APPLICATION. **See Instruction Sheet on page 2.**

This petition must be timely filed electronically using the USPTO electronic filing system, EFS-Web.

1. By filing this petition:

   Applicant is requesting early publication: Applicant hereby requests early publication under 37 CFR 1.219 and the publication fee set forth in 37 CFR 1.18(d) accompanies this request.

2. By filing this petition: applicant is agreeing to make an election without traverse in a telephonic interview and elect an invention that meets the eligibility requirements set forth in the notice titled "Pilot Program for Green Technologies Including Greenhouse Gas Reduction," as modified by the notice titled "Elimination of Classification Requirement in the Green Technology Pilot Program," each of which was published in the Federal Register, if the Office determines that the claims are not obviously directed to a single invention.

3. This request is accompanied by statements of special status for the eligibility requirement.

4. The application contains no more than three (3) independent claims and twenty (20) total claims.

5. The application does not contain any multiple dependent claims.

6. Other attachments: _____

Signature /Kyle W. Sherrill/	Date 11 July 2011
Name (Print/Typed) Kyle W. Sherrill	Registration Number 62130

Note: *Signatures of all the inventors or assignees of record of the entire interest or their representative(s) are required in accordance with 37 CFR 1.33 and 11.18. Please see 37 CFR 1.4(d) for the form of the signature. If necessary, submit multiple forms for more than one signature, see below*.*

☐ *Total of 2 forms are submitted.

The information is required to obtain or retain a benefit by the public which is to file (and by the USPTO to process) an application. Confidentiality is governed by 35 U.S.C. 122 and 37 CFR 1.11 and 1.14. This collection is estimated to take 1 hour to complete, including gathering, preparing, and submitting the completed application form to the USPTO. Time will vary depending upon the individual case. Any comments on the amount of time you require to complete this form and/or suggestions for reducing this burden, should be sent to the Chief Information Officer, U.S. Patent and Trademark Office, U.S. Department of Commerce, P.O. Box 1450, Alexandria, VA 22313-1450. DO NOT SEND FEES OR COMPLETED FORMS TO THIS ADDRESS. **SEND TO: Commissioner for Patents, P.O. Box 1450, Alexandria, VA 22313-1450.**

If you need assistance in completing the form, call 1-800-PTO-9199 and select option 2.

PTO/SB/420 (05-10)
Approved for use through 01/31/2011. OMB 0651-0062
U.S. Patent and Trademark Office; U. S. DEPARTMENT OF COMMERCE
Under the Paperwork Reduction Act of 1995, no persons are required to respond to a collection of information unless it displays a valid OMB control number.

Instruction Sheet for Petition to Make Special Under the Green Technology Pilot Program

(Not to be Submitted to the USPTO)

***The following is a summary of the requirements** (for more information see the notices (i) "Pilot Program for Green Technologies Including Greenhouse Gas Reduction" and (ii) "Elimination of Classification Requirement in the Green Technology Pilot Program," available on the USPTO web site at http://www.uspto.gov/patents/init_events/green_tech.jsp):*

(1) The application must be a non-reissue, non-provisional utility application filed under 35 U.S.C. 111(a), or an international application that has entered the national stage in compliance with 35 U.S.C. 371. The application must be previously filed before the publication date of the notice cited above. Reexamination proceedings are excluded from this pilot program.

(2) The application must contain three or fewer independent claims and twenty or fewer total claims. The application must not contain any multiple dependent claims. For an application that contains more than three independent claims or twenty total claims, or multiple dependent claims, applicant must file a preliminary amendment in compliance with 37 CFR 1.121 to cancel the excess claims and/or the multiple dependent claims at the time the petition to make special is filed.

(3) The claims must be directed to a single invention that materially enhances the quality of the environment, or that materially contributes to: (1) the discovery or development of renewable energy resources; (2) the more efficient utilization and conservation of energy resources; or (3) green house gas emission reduction (see the eligibility requirements of sections II and III of the notice (i) cited above). The petition must include a statement that, if the USPTO determines that the claims are directed to multiple inventions (e.g., in a restriction requirement), applicant will agree to make an election without traverse in a telephonic interview, and elect an invention that meets the eligibility requirements in section II or III of the notice (i) cited above.

(4) The petition to make special must be timely filed electronically using the USPTO electronic filing system, EFS-Web, and selecting the document description of "Petition for Green Tech Pilot" on the EFS-Web screen. Applicant should use form PTO/SB/420, which is available as a Portable Document Format (PDF) fillable form in EFS-Web and on the USPTO Web site.

(5) The petition to make special must be filed at least one day prior to the date that a first Office action (which may be an Office action containing only a restriction requirement) appears in the Patent Application Information Retrieval (PAIR) system. Applicant may check the status of the application using PAIR.

(6) The petition to make special must be accompanied by a request for early publication in compliance with 37 CFR 1.219 and the publication fee set forth in 37 CFR 1.18(d).

Privacy Act Statement

The **Privacy Act of 1974 (P.L. 93-579)** requires that you be given certain information in connection with your submission of the attached form related to a patent application or patent. Accordingly, pursuant to the requirements of the Act, please be advised that: (1) the general authority for the collection of this information is 35 U.S.C. 2(b)(2); (2) furnishing of the information solicited is voluntary; and (3) the principal purpose for which the information is used by the U.S. Patent and Trademark Office is to process and/or examine your submission related to a patent application or patent. If you do not furnish the requested information, the U.S. Patent and Trademark Office may not be able to process and/or examine your submission, which may result in termination of proceedings or abandonment of the application or expiration of the patent.

The information provided by you in this form will be subject to the following routine uses:

1. The information on this form will be treated confidentially to the extent allowed under the Freedom of Information Act (5 U.S.C. 552) and the Privacy Act (5 U.S.C 552a). Records from this system of records may be disclosed to the Department of Justice to determine whether disclosure of these records is required by the Freedom of Information Act.
2. A record from this system of records may be disclosed, as a routine use, in the course of presenting evidence to a court, magistrate, or administrative tribunal, including disclosures to opposing counsel in the course of settlement negotiations.
3. A record in this system of records may be disclosed, as a routine use, to a Member of Congress submitting a request involving an individual, to whom the record pertains, when the individual has requested assistance from the Member with respect to the subject matter of the record.
4. A record in this system of records may be disclosed, as a routine use, to a contractor of the Agency having need for the information in order to perform a contract. Recipients of information shall be required to comply with the requirements of the Privacy Act of 1974, as amended, pursuant to 5 U.S.C. 552a(m).
5. A record related to an International Application filed under the Patent Cooperation Treaty in this system of records may be disclosed, as a routine use, to the International Bureau of the World Intellectual Property Organization, pursuant to the Patent Cooperation Treaty.
6. A record in this system of records may be disclosed, as a routine use, to another federal agency for purposes of National Security review (35 U.S.C. 181) and for review pursuant to the Atomic Energy Act (42 U.S.C. 218(c)).
7. A record from this system of records may be disclosed, as a routine use, to the Administrator, General Services, or his/her designee, during an inspection of records conducted by GSA as part of that agency's responsibility to recommend improvements in records management practices and programs, under authority of 44 U.S.C. 2904 and 2906. Such disclosure shall be made in accordance with the GSA regulations governing inspection of records for this purpose, and any other relevant (*i.e.*, GSA or Commerce) directive. Such disclosure shall not be used to make determinations about individuals.
8. A record from this system of records may be disclosed, as a routine use, to the public after either publication of the application pursuant to 35 U.S.C. 122(b) or issuance of a patent pursuant to 35 U.S.C. 151. Further, a record may be disclosed, subject to the limitations of 37 CFR 1.14, as a routine use, to the public if the record was filed in an application which became abandoned or in which the proceedings were terminated and which application is referenced by either a published application, an application open to public inspection or an issued patent.
9. A record from this system of records may be disclosed, as a routine use, to a Federal, State, or local law enforcement agency, if the USPTO becomes aware of a violation or potential violation of law or regulation.

UNITED STATES PATENT AND TRADEMARK OFFICE

UNITED STATES DEPARTMENT OF COMMERCE
United States Patent and Trademark Office
Address: COMMISSIONER FOR PATENTS
P.O. Box 1450
Alexandria, Virginia 22313-1450
www.uspto.gov

APPLICATION NO.	FILING DATE	FIRST NAMED INVENTOR	ATTORNEY DOCKET NO.	CONFIRMATION NO.
13/180,218	07/11/2011	Alfred E. KELLER	40737US1	2023

28841 7590 08/26/2011

ConocoPhillips Company
IP Services Group Attn: DOCKETING
600 N. Dairy Ashford
Bldg. ML-1065
Houston, TX 77079

EXAMINER	
VANOY, TIMOTHY C	

ART UNIT	PAPER NUMBER
1734	

NOTIFICATION DATE	DELIVERY MODE
08/26/2011	ELECTRONIC

Please find below and/or attached an Office communication concerning this application or proceeding.

The time period for reply, if any, is set in the attached communication.

Notice of the Office communication was sent electronically on above-indicated "Notification Date" to the following e-mail address(es):

Legal-IP@conocophillips.com

UNITED STATES PATENT AND TRADEMARK OFFICE

Commissioner for Patents
United States Patent and Trademark Office
P.O. Box 1450
Alexandria, VA 22313-1450
www.uspto.gov

8/26/11

ConocoPhillips Company
IP Services Group Attn: DOCKETING
600 N. Dairy Ashford
Bldg. ML-1065
Houston TX 77079

In re Application of	:	
Alfred E. Keller et al.	:	DECISION ON PETITION
Application No. 13/180,218	:	TO MAKE SPECIAL UNDER
Filed: July 11, 2011	:	THE GREEN TECHNOLOGY
Attorney Docket No. 40737US1	:	PILOT PROGRAM

This is a decision on the petition under 37 CFR 1.102, filed July 11, 2011, to make the above-identified application special under the pilot program for applications pertaining to Green Technologies as set forth in 74 Federal Register Notice 64666 (December 8, 2009) and amended by 75 Federal Register Notice 28554 (May 21, 2010) and 75 Federal Register Notice 69049 (November 10, 2010).

The petition is **GRANTED**.

A grantable petition to make an application special under 37 CFR 1.102 and the pilot program as set forth in 74 FR 64666 must be directed to a nonprovisional application filed under 35 USC 111(a) or be a national stage entry under 35 USC 371, exclusive of any reissue applications.

In order to qualify for special status, the following requirements must be met. 1) The application must have no more than 3 independent claims and no more than 20 total claims. 2) The application must not contain any multiple dependent claims. 3) The petition must state the basis for seeking special status, i.e., the claimed invention either: A) materially enhances the quality of the environment or B) materially contributes to: i) the discovery or development of renewable energy resources, ii) the more efficient utilization and conservation of energy resources, or iii) greenhouse gas emission reduction. 4) If the disclosure is not clear on its face that the claimed invention materially contributes under category (A) or (B), the petition must be accompanied by a statement by the applicant, assignee, or an attorney/agent registered to practice before the Office explaining how the materiality standard is met. 5) A statement that applicant will agree to make an election without traverse in a telephonic interview if a restriction requirement is made by the examiner. 6) The petition to make special must be filed electronically. 7) The petition must be filed at least one day prior to the date that a first Office Action appears in the Patent Application Information Retrieval (PAIR) system. 8) The petition must be accompanied by a request for early publication in compliance with 37 CFR 1.219 and include the publication fee as set forth in 37 CFR 1.18(d).

The requirement for a fee for consideration of the petition to make special for applications pertaining to Green Technologies has been waived.

The instant petition complies with items 1 – 8 above. Accordingly, the above-identified application has been accorded "special" status.

Telephone inquires concerning this decision should be directed to Blaine Copenheaver at 571-272-1156.

The application is being forwarded to the examiner for action on the merits commensurate with this decision.

/Blaine Copenheaver/

Blaine Copenheaver
Quality Assurance Specialist
Technology Center 1700

Doc Code: PPH.PCT.652
Document Description: Petition to make special under PCT-Patent Pros Hwy

PTO/SB/20PCT-US (09-10)
Approved for use through 01/31/2012. OMB 0651-0058
U.S. Patent and Trademark Office; U. S. DEPARTMENT OF COMMERCE
Under the Paperwork Reduction Act of 1995, no persons are required to respond to a collection of information unless it displays a valid OMB control number.

REQUEST FOR PARTICIPATION IN THE PATENT COOPERATION TREATY - PATENT PROSECUTION HIGHWAY (PCT-PPH) PILOT PROGRAM IN A U.S. APPLICATION WHERE THE USPTO WAS THE ISA OR IPEA

Application No:	13/180,250	Filing date:	July 11, 2011
First Named Inventor:	Dion K. Aoki		
Title of the Invention:	Wagering Game With Dual-Play Feature		

THIS REQUEST FOR PARTICIPATION IN THE PCT-PPH PILOT PROGRAM ALONG WITH THE REQUIRED DOCUMENTS MUST BE SUBMITTED VIA EFS-WEB. INFORMATION REGARDING EFS-WEB IS AVAILABLE AT HTTP://WWW.USPTO.GOV/EBC/EFS_HELP.HTML

APPLICANT HEREBY REQUESTS PARTICIPATION IN THE PCT-PPH PROGRAM AND PETITIONS TO MAKE THE ABOVE-IDENTIFIED APPLICATION SPECIAL UNDER THE PCT-PPH PROGRAM.

The above-identified application is (1) a national stage entry of the corresponding PCT application, or (2) a national stage entry of another PCT application which claims priority to the corresponding PCT application, or (3) a national application that claims domestic/ foreign priority to the corresponding PCT application, or (4) a national application which forms the basis for the priority claim in the corresponding PCT application, or (5) a continuing application of a U.S. application that satisfies one of (1) to (4) above, or (6) a U.S. application that claims domestic benefit to a U.S. provisional application which forms the basis for the priority claim in the corresponding PCT application.

The corresponding PCT application number(s) is/are: PCT/US2008/079971

The international date of the corresponding PCT application(s) is/are:

October 15, 2008

I. List of Required Documents:

a. **A copy of the latest international work product (WO/ISA, WO/IPEA, or IPER) in the above–identified corresponding PCT application(s)**

☒ Is attached

☐ Is not attached because the document is already in the U.S. application.

b. **A copy of all claims which were indicated as having novelty, inventive step and industrial applicability in the above-identified corresponding PCT application(s).**

☒ Is attached.

☐ Is not attached because the document is already in the U.S. application.

c. **English translations of the documents in a. and b. above are attached (if the documents are not in the English language). A statement that the English translation is accurate is attached for the document in b. above.**

This collection of information is required by 35 U.S.C. 119, 37 CFR 1.55, and 37 CFR 1.102(d). The information is required to obtain or retain a benefit by the public, which is to file (and by the USPTO to process) an application. Confidentiality is governed by 35 U.S.C. 122 and 37 CFR 1.11 and 1.14. This collection is estimated to take 2 hours to complete, including gathering, preparing, and submitting the completed application form to the USPTO. Time will vary depending upon the individual case. Any comments on the amount of time you require to complete this form and/or suggestions for reducing this burden should be sent to the Chief Information Officer, U.S. Patent and Trademark Office, U.S. Department of Commerce, P.O. Box 1450, Alexandria, VA 22313-1450. DO NOT SEND FEES OR COMPLETED FORMS TO THIS ADDRESS.

PTO/SB/20PCT-US (09-10)
Approved for use through 01/31/2012. OMB 0651-0058
U.S.Patent and Trademark Office; U.S. DEPARTMENT OF COMMERCE
Under the Paperwork Reduction Act of 1995, no persons are required to respond to a collection of information unless it displays a valid OMB control number.

REQUEST FOR PARTICIPATION IN THE PCT-PPH PILOT PROGRAM IN A U.S. APPLICATION WHERE THE USPTO WAS THE ISA OR IPEA (continued)

Application No.:	13/180,250
First Named Inventor:	Dion K. Aoki

d. **(1) An information disclosure statement listing the documents cited in the international work products (ISR, WO/ISA, WO/IPEA, IPER) of the corresponding PCT application.**

☒ Is attached

☐ Has already been filed in the above-identified U.S. application on _____

(2) Copies of all documents (except) for U.S. patents or U.S. patent application publications)

☒ Are attached.

☐ Have already been filed in the above-identified U.S. application on _____

II. Claims Correspondence Table:

Claims in US Application	Patentable Claims in the corresponding PCT Application	Explanation regarding the correspondence
1-41	1-41	Identical

III. All the claims in the US application sufficiently correspond to the patentable claims in the corresponding PCT application.

Signature /Jason S. Kray, Reg. No. 66,926/	Date 07/11/2011
Name (Print/Typed) Jason S. Kray	Registration Number 66,926

Privacy Act Statement

The **Privacy Act of 1974 (P.L. 93-579)** requires that you be given certain information in connection with your submission of the attached form related to a patent application or patent. Accordingly, pursuant to the requirements of the Act, please be advised that: (1) the general authority for the collection of this information is 35 U.S.C. 2(b)(2); (2) furnishing of the information solicited is voluntary; and (3) the principal purpose for which the information is used by the U.S. Patent and Trademark Office is to process and/or examine your submission related to a patent application or patent. If you do not furnish the requested information, the U.S. Patent and Trademark Office may not be able to process and/or examine your submission, which may result in termination of proceedings or abandonment of the application or expiration of the patent.

The information provided by you in this form will be subject to the following routine uses:

1. The information on this form will be treated confidentially to the extent allowed under the Freedom of Information Act (5 U.S.C. 552) and the Privacy Act (5 U.S.C 552a). Records from this system of records may be disclosed to the Department of Justice to determine whether disclosure of these records is required by the Freedom of Information Act.
2. A record from this system of records may be disclosed, as a routine use, in the course of presenting evidence to a court, magistrate, or administrative tribunal, including disclosures to opposing counsel in the course of settlement negotiations.
3. A record in this system of records may be disclosed, as a routine use, to a Member of Congress submitting a request involving an individual, to whom the record pertains, when the individual has requested assistance from the Member with respect to the subject matter of the record.
4. A record in this system of records may be disclosed, as a routine use, to a contractor of the Agency having need for the information in order to perform a contract. Recipients of information shall be required to comply with the requirements of the Privacy Act of 1974, as amended, pursuant to 5 U.S.C. 552a(m).
5. A record related to an International Application filed under the Patent Cooperation Treaty in this system of records may be disclosed, as a routine use, to the International Bureau of the World Intellectual Property Organization, pursuant to the Patent Cooperation Treaty.
6. A record in this system of records may be disclosed, as a routine use, to another federal agency for purposes of National Security review (35 U.S.C. 181) and for review pursuant to the Atomic Energy Act (42 U.S.C. 218(c)).
7. A record from this system of records may be disclosed, as a routine use, to the Administrator, General Services, or his/her designee, during an inspection of records conducted by GSA as part of that agency's responsibility to recommend improvements in records management practices and programs, under authority of 44 U.S.C. 2904 and 2906. Such disclosure shall be made in accordance with the GSA regulations governing inspection of records for this purpose, and any other relevant (*i.e.*, GSA or Commerce) directive. Such disclosure shall not be used to make determinations about individuals.
8. A record from this system of records may be disclosed, as a routine use, to the public after either publication of the application pursuant to 35 U.S.C. 122(b) or issuance of a patent pursuant to 35 U.S.C. 151. Further, a record may be disclosed, subject to the limitations of 37 CFR 1.14, as a routine use, to the public if the record was filed in an application which became abandoned or in which the proceedings were terminated and which application is referenced by either a published application, an application open to public inspection or an issued patent.
9. A record from this system of records may be disclosed, as a routine use, to a Federal, State, or local law enforcement agency, if the USPTO becomes aware of a violation or potential violation of law or regulation.

UNITED STATES PATENT AND TRADEMARK OFFICE

UNITED STATES DEPARTMENT OF COMMERCE
United States Patent and Trademark Office
Address: COMMISSIONER FOR PATENTS
P.O. Box 1450
Alexandria, Virginia 22313-1450
www.uspto.gov

APPLICATION NO.	FILING DATE	FIRST NAMED INVENTOR	ATTORNEY DOCKET NO.	CONFIRMATION NO.
13/180,250		Dion K. Aoki	247079-000556USC1	2100

70243 7590 07/19/2011

NIXON PEABODY LLP
300 S. Riverside Plaza
16th Floor
CHICAGO, IL 60606

EXAMINER	
ART UNIT	PAPER NUMBER
3711	

MAIL DATE	DELIVERY MODE
07/19/2011	PAPER

Please find below and/or attached an Office communication concerning this application or proceeding.

The time period for reply, if any, is set in the attached communication.

UNITED STATES PATENT AND TRADEMARK OFFICE

Commissioner for Patents
United States Patent and Trademark Office
P.O. Box 1450
Alexandria, VA 22313-1450
www.uspto.gov

NIXON PEABODY LLP
300 S. Riverside Plaza
16th Floor
CHICAGO IL 60606

In re Application of: AOKI, DION K. Serial No.: 13/180250 Filed: July 11, 2011 Attorney Docket No. : 247079-000556USC1 Title: WAGERING GAME WITH DUAL-PLAY FEATURE	DECISION ON A REQUEST TO PARTICIPATE IN PCT/PATENT PROSECUTION HIGHWAY PROGRAM AND PETITION TO MAKE SPECIAL UNDER CFR 1.102(a)

This is a decision on the request to participate in the Patent Prosecution Highway (PPH) program and the petition under 37 CFR 1.102(a), filed July 11, 2011 to make the above-identified application special.

The request and petition are **granted.**

A grantable request to participate in the PPH pilot program and petition to make special require:

(1) The U.S. application must validly claim priority under 35 U.S.C. 119(a) to one or more PCT applications filed in the JPO, EPO, KIPO, or USPTO;
(2) Applicant must submit a copy of the allowable/patentable claim(s) from the PCT application(s) latest international work product (the written opinion or the IPER) along with an English translation thereof and a statement that the English translation is accurate;
(3) All the claims in the U.S. application must sufficiently correspond or be amended to sufficiently correspond to the allowable/patentable claim(s) in the PCT application(s);
(4) Examination of the U.S. application has not begun;
(5) Applicant must submit a copy of the latest international work product from the PCT application containing the allowable/patentable claim(s) along with an English translation thereof and a statement that the English translation is accurate; and
(6) Applicant must submit an IDS listing the documents cited by the PCT examiner in the international work product along with copies of documents except U.S. patents or U.S. patent application publications.

In light of the petition being properly submitted, the request to participate in the PPH program and the petition comply with the above requirements. Accordingly, the above-identified application has been accorded "special" status.

The applicant is encouraged to cite and submit all relevant prior art references, if any, to facilitate examination in this application.

Response must be filed via EFS-Web. Telephone inquiries concerning this decision should be directed to Henry C. Yuen, at 571-272-4856.

Petition is **granted**.

/Henry C. Yuen/

Henry C. Yuen
Special Programs Examiner
Technology Center 3700
Tel: 571-272-4856

UNITED STATES PATENT AND TRADEMARK OFFICE

UNITED STATES DEPARTMENT OF COMMERCE
United States Patent and Trademark Office
Address: COMMISSIONER FOR PATENTS
P.O. Box 1450
Alexandria, Virginia 22313-1450
www.uspto.gov

APPLICATION NO.	FILING DATE	FIRST NAMED INVENTOR	ATTORNEY DOCKET NO.	CONFIRMATION NO.
13/180,316	07/11/2011	Ramana Malladi	003168.1286	2234

11030 7590 09/07/2011

Baker Botts L.L.P.
30 Rockefeller Plaza
New York, NY 10112-4498

EXAMINER	
ART UNIT	PAPER NUMBER
1627	

MAIL DATE	DELIVERY MODE
09/07/2011	PAPER

Please find below and/or attached an Office communication concerning this application or proceeding.

The time period for reply, if any, is set in the attached communication.

UNITED STATES PATENT AND TRADEMARK OFFICE

Commissioner for Patents
United States Patent and Trademark Office
P.O. Box 1450
Alexandria, VA 22313-1450
www.uspto.gov

SEP 0 7 2011

Baker Botts L.L.P.
30 Rockefeller Plaza
New York NY 10112-4498

In re Application of:
Ramana Malladi
Serial No.: 13/180,316
Filed: July 11, 2011
Attorney Docket No.: **003168.1286**

: PETITION DECISION

This is in response to the petition under 37 CFR § 1.59(b), filed August 12, 2011, to expunge information from the above identified application. This application has not been allowed.

Petitioner requests material cited in the Supplemental Information Disclosure Statement and submitted on August 12, 2011 be expunged. Petitioner states either: (A) that the information contains trade secret material, proprietary material and/or material that is subject to a protective order which has not been made public; or (B) that the information submitted was unintentionally submitted and the failure to obtain its return would cause irreparable harm to the party who submitted the information or to the party in interest on whose behalf the information was submitted, and the information has not otherwise been made public. The petition fee set forth in 37 CFR § 1.17(g) has been paid.

This is an unexamined application. As such the information provided has not been reviewed, nor have proceedings in the application been terminated. As stated in M.P.E.P. 724, upon allowance or other action closing prosecution in an application, petition may be made for return of Proprietary information. The information cannot be expunged at this time but the pages will be "closed" in PAIR such that only the examiner can view said pages.

The petition is **DISMISSED**. Petitioner may resubmit the petition subsequent to a Notice of Allowability or *ex parte Quayle* action being mailed in the application. No additional petition fee will be required at that time.

Should there be any questions about this decision please contact Marianne C. Seidel by letter addressed to Director, TC 1600, at the address listed above, or by telephone at 571-272-0584 or by facsimile sent to the general Office facsimile number, 571-273-8300.

/MC Seidel/
Marianne C. Seidel, Quality Assurance Specialist
Technology Center 1600

Doc Code: PET.GREEN
Document Description: Petition for Green Tech Pilot

PTO/SB/420 (11-10)
Approved for use through 01/31/2011. OMB 0651-0062
U.S. Patent and Trademark Office; U. S. DEPARTMENT OF COMMERCE
Under the Paperwork Reduction Act of 1995, no persons are required to respond to a collection of information unless it displays a valid OMB control number.

PETITION TO MAKE SPECIAL UNDER THE GREEN TECHNOLOGY PILOT PROGRAM

Attorney Docket Number: 6073-0009	Application Number (if known):	Filing date:
First Named Inventor: Robert L. Doneker		
Title: : ENERGY EFFICIENT NOISE DAMPENING CABLES		

APPLICANT HEREBY REQUESTS TO PARTICIPATE IN THE GREEN TECHNOLOGY PILOT PROGRAM FOR THE ABOVE-IDENTIFIED APPLICATION. See Instruction Sheet on page 2.

This petition must be timely filed electronically using the USPTO electronic filing system, EFS-Web.

1. By filing this petition:

   Applicant is requesting early publication: Applicant hereby requests early publication under 37 CFR 1.219 and the publication fee set forth in 37 CFR 1.18(d) accompanies this request.

2. By filing this petition: applicant is agreeing to make an election without traverse in a telephonic interview and elect an invention that meets the eligibility requirements for the Green Technology Pilot Program, if the Office determines that the claims are not obviously directed to a single invention. See Instruction Sheet.

3. This request is accompanied by statements of special status for the eligibility requirement.

4. The application contains no more than three (3) independent claims and twenty (20) total claims.

5. The application does not contain any multiple dependent claims.

6. Other attachments: _____

Signature	Date 2011-07-11
Name (Print/Typed) David A. Crowther	Registration Number 60426

Note: *Signatures of all the inventors or assignees of record of the entire interest or their representative(s) are required in accordance with 37 CFR 1.33 and 11.18. Please see 37 CFR 1.4(d) for the form of the signature. If necessary, submit multiple forms for more than one signature see below*.*

[X] *Total of 1 forms are submitted.

The information is required to obtain or retain a benefit by the public which is to file (and by the USPTO to process) an application. Confidentiality is governed by 35 U.S.C. 122 and 37 CFR 1.11 and 1.14. This collection is estimated to take 12 hours to complete, including gathering, preparing, and submitting the completed application form to the USPTO. Time will vary depending upon the individual case. Any comments on the amount of time you require to complete this form and/or suggestions for reducing this burden, should be sent to the Chief Information Officer, U.S. Patent and Trademark Office, U.S. Department of Commerce, P.O. Box 1450, Alexandria, VA 22313-1450. DO NOT SEND FEES OR COMPLETED FORMS TO THIS ADDRESS. **SEND TO: Commissioner for Patents, P.O. Box 1450, Alexandria, VA 22313-1450.**

If you need assistance in completing the form, call 1-800-PTO-9199 and select option 2.

PATENT APPLICATION
Attorney's Do. No. 6073-0009

IN THE UNITED STATES PATENT AND TRADEMARK OFFICE

In re application of:
Robert L. Doneker and Kent G. R. Thompson

For: ENERGY EFFICIENT NOISE DAMPENING CABLES

Commissioner for Patents
P.O. Box 1450
Alexandria, Virginia 22313-1450

STATEMENT OF SPECIAL STATUS FOR THE ELIGIBILITY REQUIREMENT IN CONNECTION WITH THE GREEN TECHNOLOGY PILOT PROGRAM

This statement is filed in accordance with the requirements listed in petition form PTO/SB/420, filed herewith.

The invention of the subject patent application materially contributes to energy conservation by reducing noise and increasing energy efficiency in cables. It is clear on the face of the above-referenced application that the claimed invention materially contributes to energy conservation. In addition, by way of further support and explanation, energy efficiency is improved by reducing unwanted effects of electromagnetic noise in coaxial and twisted pair cables, which permits the cables to be operated using lower voltage signals. Miles of coaxial and twisted pair cables are used around the world and if even a fraction of those cables adopt the techniques disclosed herein, significant energy conservation can be achieved.

Another basis for the special status is that aspects of the invention materially contribute to greenhouse gas emission reduction. It is clear on the face of the above-referenced application that the claimed invention materially contributes to greenhouse gas emission reduction. In addition, by way of further support and explanation, the noise dampening energy efficient coaxial and twisted pair cables reduce greenhouse gas emission by lessening the power requirements for operating the cables. As a result, a reduction in greenhouse gas emissions produced by power plants is achieved by reducing the energy consumption needs of cables.

Applicant respectfully requests that a favorable decision on this Petition be granted and the application be accorded special status under the Green Technology Pilot Program.

Respectfully submitted,

20575
Customer No.

MARGER JOHNSON & McCOLLOM, P.C.

By _____
David A. Crowther
Registration No. 60,426

210 S.W. Morrison Street, Suite 400
Portland, Oregon 97204
Telephone: (503) 222-3613

UNITED STATES PATENT AND TRADEMARK OFFICE

UNITED STATES DEPARTMENT OF COMMERCE
United States Patent and Trademark Office
Address: COMMISSIONER FOR PATENTS
P.O. Box 1450
Alexandria, Virginia 22313-1450
www.uspto.gov

APPLICATION NO.	FILING DATE	FIRST NAMED INVENTOR	ATTORNEY DOCKET NO.	CONFIRMATION NO.
13/180,412	07/11/2011	Robert L. Doncker	6073-0009	2392

20575 7590 09/22/2011
MARGER JOHNSON & MCCOLLOM, P.C.
210 SW MORRISON STREET, SUITE 400
PORTLAND, OR 97204

EXAMINER	
ART UNIT	PAPER NUMBER
2835	

NOTIFICATION DATE	DELIVERY MODE
09/22/2011	ELECTRONIC

Please find below and/or attached an Office communication concerning this application or proceeding.

The time period for reply, if any, is set in the attached communication.

Notice of the Office communication was sent electronically on above-indicated "Notification Date" to the following e-mail address(es):

docketing@techlaw.com

UNITED STATES PATENT AND TRADEMARK OFFICE

Commissioner for Patents
United States Patent and Trademark Office
P.O. Box 1450
Alexandria, VA 22313-1450
www.uspto.gov

MARGER JOHNSON & MCCOLLOM, P.C.
210 SW MORRISON STREET, SUITE 400
PORTLAND OR 97204

In re Application of	:	
DONEKER et al.	:	DECISION ON PETITION
Application No. 13/180412	:	TO MAKE SPECIAL UNDER
Filed: July 11, 2011	:	THE GREEN TECHNOLOGY
Attorney Docket No. 6073-0009	:	PILOT PROGRAM

This is a decision on the petition under 37 CFR 1.102, filed on July 11, 2011, to make the above-identified application special under the pilot program for applications pertaining to Green Technologies as set forth 74 Federal Register Notice 64666 (December 8, 2009) and amended by 75 Federal Register Notice 28554 (May 21, 2010) and 75 Federal Register Notice 69049 (November 10, 2010).

The petition is **DISMISSED**.

If reconsideration of this decision is desired, a petition for reconsideration must be filed within ONE (1) MONTH OR THIRTY (30) DAYS from the mail date of this decision, whichever is longer. No extension of this time limit can be granted under 37 CFR 1.136(a) or (b). The petition for reconsideration should include an exhaustive attempt to provide the lacking item(s) noted below, since, after a decision on the petition for reconsideration, no further reconsideration or review of the matter will be undertaken by the Director.

A grantable petition to make an application special under 37 CFR 1.102 and the pilot program as set forth in 74 FR 64666 must be directed to a nonprovisional application filed under 35 USC 111(a) or be a national stage entry under 35 USC 371, exclusive of any reissue applications and be filed prior to the date of the notice, December 8, 2009.

In order to qualify for special status, the following requirements must be met. 1) The application must have no more than 3 independent claims and no more than 20 total claims. 2) The application must not contain any multiple dependent claims. 3) The petition must state the basis for seeking special status, i.e., the claimed invention either: A) materially enhances the quality of the environment or B) materially contributes to: i) the discovery or development of renewable energy resources, ii) the more efficient utilization and conservation of energy resources, or iii) greenhouse gas emission reduction. 4) If the disclosure is not clear on its face that the claimed invention materially contributes under category (A) or (B), the petition must be accompanied by a statement by the applicant, assignee, or an attorney/agent registered to practice before the Office explaining how the materiality standard is met. 5) A statement that applicant will agree to

make an election without traverse in a telephonic interview if a restriction requirement is made by the examiner. 6) The petition to make special must be filed electronically. 7) The petition must be filed at least one day prior to the date that a first Office Action appears in the Patent Application Information Retrieval (PAIR) system. 8) The petition must be accompanied by a request for early publication in compliance with 37 CFR 1.219 and include the publication fee as set forth in 37 CFR 1.18(d).

The requirement for a fee for consideration of the petition to make special for applications pertaining to Green Technologies has been waived.

The petition lacks item 4.

In regard to item 4, applicant's statement pertaining to how the materiality standard is met does not satisfy the requirements for this pilot. The petition alleges that the claimed invention contributes to more efficient utilization and conservation of energy resources and greenhouse gas emission reduction. The claims are generally directed to a coaxial cable. The materiality standard does not permit an applicant to speculate as to how a hypothetical end-user might specially apply the invention. Any argument that the claimed invention can be used to provide more efficient utilization of energy resources and/or greenhouse gas emission reduction is considered speculation as to how a hypothetical end-user might specially apply the claimed invention.

Any reconsideration of this decision should be submitted through the USPTO electronic filing system, EFS-Web, and selecting the document description of "Petition for Green Tech Pilot" on the EFS-Web screen.

Telephone inquiries concerning this decision should be directed to Colleen Dunn at 571-272-1170.

The application is being forwarded to the appropriate Technology Center Art Unit for action in its regular turn.

/Colleen Dunn/

Colleen Dunn
Quality Assurance Specialist
Technology Center 2800

UNITED STATES PATENT AND TRADEMARK OFFICE

Commissioner for Patents
United States Patent and Trademark Office
P.O. Box 1450
Alexandria, VA 22313-1450
www.uspto.gov

Joseph McCain
3762 Dove Creek
Celina TX 75009

MAILED
OCT 07 2011
OFFICE OF PETITIONS

In re Application of :
JOSEPH MCCAIN :
Application No. 13/180,540 : DECISION ON PETITION
Filed: July 11, 2011 :
Attorney Docket No. 32848.10 :

This is in response to the petition under 37 CFR 1.57(a), filed September 22, 2011, requesting that the above-referenced application be accorded a filing date of July 11, 2011. This petition is being treated pursuant to 37 CFR 1.53(e)(2).[1]

The application papers in the above-identified application were deposited on July 11, 2011. On July 25, 2011, the Office of Patent Application Processing mailed applicants a "Notice of Incomplete Nonprovisional Application," notifying applicant that the application papers had not been accorded a filing date because the application was deposited without drawings. Additionally, the Notice stated that an oath or declaration was missing.

In response, applicant timely filed this petition (and fee), a preliminary amendment, an Application Data Sheet, 19 sheets of drawings and an executed declaration. Applicant requests that the application be amended to include the inadvertently omitted drawings on the basis that the application as filed contained a claim under 37 CFR 1.78 for the benefit of prior-filed nonprovisional Application 12/467,703.

Applicant's argument and evidence have been considered. However, a review of the application confirms that the application, as filed, contained at least one method claim. MPEP § 601.01(f) provides that:

[1] Any request for review of a notification pursuant to § 1.53(e)(1), or a notification that the original application papers lack a portion of the specification or drawing(s), must be by way of a petition pursuant to § 1.53(e) accompanied by the fee set forth in § 1.17(f). In the absence of a timely (§ 1.181(f)) petition, the filing date of an application in which the applicants were notified of a filing error pursuant to § 1.53(e)(1) will be the date the filing error is corrected.

> It has been USPTO practice to treat an application that contains at least one process or method claim as an application for which a drawing is not necessary for an understanding of the invention under 35 U.S.C. 113 (first sentence).

Thus, pursuant to § 601.01(f), a drawing is not considered essential for a filing date. The instant application is entitled to a filing date without drawings present in the application. Accordingly, the Office should have granted the application a filing date and mailed a Notice of Omitted Items instead of a Notice of Incomplete Nonprovisional Application. As stated in MPEP § 601.01(g) under the section entitled, "Application Entitled to a Filing Date," applicant may submit an amendment to include the inadvertently omitted portion of the drawing(s) pursuant to 37 CFR 1.57(a):

> [i]f an application was filed on or after September 21, 2004, and contains a claim under 37 CFR 1.55 for priority of a prior-filed foreign application, or a claim under 37 CFR 1.78 for the benefit of a prior-filed provisional, nonprovisional, or international application that was present on the filing date of the application, and the omitted portion of the drawing(s) was inadvertently omitted from the application and is completely contained in the prior-filed application[.]

Please note that no petition is required and that the amendment must comply with 37 CFR 1.57(a) and 37 CFR 1.121. See MPEP § 201.17. Any amendment to include the inadvertently omitted drawing(s) will be considered by the examiner.

The petition is **GRANTED** to the extent the instant application will be accorded a filing date of July 11, 2011, with no drawings as part of the original disclosure.

Given the basis for granting this petition, the $400.00 petition fee will be refunded by treasury check in due course.

Pursuant to this decision, the application will be referred to Office of Patent Application Processing for:

- **correction of the filing date to July 11, 2011;**
- **for indication in Office records, as appropriate, that "0" sheets of drawings were present on filing, and;**
- **for issuance of a filing receipt.**

Entry of the amendment filed September 22, 2011, will be determined by the examiner.

Telephone inquiries concerning this matter may be directed to Christina Tartera Donnell, Senior Petitions Attorney, at (571) 272-3211.

Christopher Bottorff
Supervisor
Office of Petitions

UNITED STATES PATENT AND TRADEMARK OFFICE

UNITED STATES DEPARTMENT OF COMMERCE
United States Patent and Trademark Office
Address: COMMISSIONER FOR PATENTS
P.O. Box 1450
Alexandria, Virginia 22313-1450
www.uspto.gov

APPLICATION NO.	FILING DATE	FIRST NAMED INVENTOR	ATTORNEY DOCKET NO.	CONFIRMATION NO.
13/180,571	07/12/2011	Pinky Yin Wah POON	P3496US02	2684

95527 7590 08/09/2011

Ella Cheong Hong Kong
5001 Hopewell Centre, 183 Queen's Road East,
Wan Chai,
HONG KONG

EXAMINER	
ART UNIT	PAPER NUMBER
3633	

NOTIFICATION DATE	DELIVERY MODE
08/09/2011	ELECTRONIC

Please find below and/or attached an Office communication concerning this application or proceeding.

The time period for reply, if any, is set in the attached communication.

Notice of the Office communication was sent electronically on above-indicated "Notification Date" to the following e-mail address(es):

mburke@ellacheong.com
syip@ellacheong.com
ewong@ellacheong.com

UNITED STATES PATENT AND TRADEMARK OFFICE

Commissioner for Patents
United States Patent and Trademark Office
P.O. Box 1450
Alexandria, VA 22313-1450
www.uspto.gov

AUG - 8 2011

Ella Cheong Hong Kong
5001 Hopewell Centre, 183 Queen's Road East,
Wan Chai, HK Hong Kong

In re application of : **DECISION ON PETITION**
Pinky Yin Wah Poon : **TO MAKE SPECIAL FOR**
Application No. 13/180,571 : **NEW APPLICATION**
Filed: July 12, 2011 : **UNDER 37 CFR 1.102**
For: GROUTLESS WALL TILE SYSTEMS

This is a decision on the petition filed on July 12, 2011 to make the above-identified application special for accelerated examination procedure under 37 C.F.R. § 1.102(d).

The petition to make the application special is **DISMISSED**.

REGULATION AND PRACTICE

A grantable petition to make special under 37 C.F.R. § 1.102(d) and pursuant to the "Change to Practice for Petitions in Patent Applications to Make Special and for Accelerated Examination" published in the Federal Register on June 26, 2006 (71 Fed. Reg. 36323), must satisfy the following conditions:

I. Conditions Regarding the Application:

1. the application must be a non-reissue utility or design application filed under 37 CFR 1.111(a);

2. the application, the petition and the required fees must be filed electronically using the USPTO's electronic filing system (EFS), or EFS-web; if not filed electronically, a statement asserting that EFS and EFS-web were not available during the normal business hours.

3. at the time of filing, the application must be complete under 37 CFR 1.51 and in condition for examination;

4. the application must contain three or fewer independent claims and twenty or fewer total claims and the claims must be directed to a single invention.

II. Conditions Regarding the Petition:

The petition must:

1. be filed with the application;

2. include a statement that applicant agrees not to separately argue the patentability of any independent claim during any appeal in the application;

3. include a statement that applicant agrees to make an election without traverse in a telephone interview.

4. include a statement that applicant agrees to conduct such an interview when requested by the examiner.

5. include a statement, made based on a good faith belief, that a preexamination search in compliance with the following requirements, was conducted, including an identification of the field of search by United States class and subclass, where applicable, and for database searches, the search logic or chemical structure or sequence used as a query, the name of the file(s) searched and the database service, and the date of the search.

The preexamination search must:

5.1 involve U.S. patents and patent application publications, foreign patent documents, and non-patent literature, unless the applicant can justify with reasonable certainty that no references more pertinent than those already identified are likely to be found in the eliminated sources and includes such a justification with this statement;

5.2. be directed to the claimed invention and encompass all of the features of the claims, giving the claims the broadest reasonable expectation;

5.3. encompass the disclosed features that may be claimed.

6. must provide in support of the petition an accelerated examination support document.

An accelerated examination support document must include:

6.1. an information disclosure statement (IDS) in compliance with 37 CFR 1.98 citing each reference deemed most closely related to the subject matter of each of the claims;

6.2. an identification of all the limitations in the claims that are disclosed by the reference specifying where the limitation is disclosed in the cited reference;

6.3. a detailed explanation of how each of the claims are patentable over the references cited with particularity required by 37 CFR 1.111(b) and (c);

6.4. a concise statement of the utility of the invention as defined in each of the independent claims (unless the application is a design application);

6.5. a showing of where each limitation of the claims finds support under 35 USC 112, first paragraph, in the written description of the specification. If applicable, the showing must also identify: (1) each means- (or step) plus-function claim element that invokes consideration under 35 UDC 112, sixth paragraph; and (2) the structure, material, or acts in the specification that corresponds to each means- (or step) plus-function claim element that invokes consideration under 35 UDC 112, sixth paragraph; if the application claims the benefit of one or more applications under title 35, United States Code, the showing must also include where each limitation of the claims finds support under 35 USC 112, first paragraph, in each such application in which such supports exists;

6.6. an identification of any cited references that may be disqualified under 35 USC 103(c).

REVIEW OF FACTS

The petition in this case fails to comply with conditions II.5.2, II.6.2, II.6.3 and II.6.5, above.

As to condition II.5.2, the petition lacks an indication of a preexamination search that encompasses all of the features of the claims. With respect to the classification search, in addition to the areas searched, the search needs to include at least a search of 52/506.01 (where the application is classified), 384, 385, 391, 392, 460; D23/307, 308; and D25/138.

Additionally, it does not appear that an acceptable text search had been completed. The search logic used by the applicant as listed in the Search document appears to be misdirected, lacking some of the claimed terms and anything synonymous with them. Search logic encompassing the "broadest reasonable interpretation" of the claimed invention is required. The USPTO website has an example of the proper manner of performing and documenting a preexamination search for Accelerated Examination petitions at: http://www.uspto.gov/web/patents/accelerated/. Additionally, examples of sample search logic are provided below:

(tile panel backsplash (back near splash) same ((overlap overlapping) stagger))
(tile panel backsplash (back near splash) same (gap space with (juncture)))

The sample search logic is not meant to be the sole search logic that can or should be employed in this application, but is meant solely as an example for applicant's assistance.

Finally, because it is necessary to look for every limitation claimed, the implication (by not being clearly addressed) in the Support Document that limitations (or partial limitations) such as the limitations of claims outlined below, for example, are not found in any of the cited references, exposes evidence of the search not encompassing the claimed invention. At least the dependent claims of 8-10 and 14-18 seem to contain elements that the examiner assigned this case believes are quite common and it strains credulity to assert that nowhere in the prior art are located these additional claimed limitations. While a reference containing a specific limitation of any one claim may not result in a rejection of the claim, not finding the structure at all calls into question the sufficiency of the search. It appears that the search may have been completed on the concept of the disclosed invention rather than the "claimed invention" as is required.

The general requirement is that applicant is required to submit an accelerated examination support document (AESD) that includes an IDS in compliance with 37 CFR 1.98 citing each reference deemed most closely related to the subject matter of each of the claims (whether in independent or dependent form). Specifically:

(1) Applicant **is not** required to cite the references that are only relevant to the general subject matter of the claims because there are references that are more closely related to the subject matter of the claims. Applicant is also not required to cite a reference that is cumulative to any other reference cited in the IDS.
(2) Applicant **is** required to cite any reference that establishes, by itself or in combination with other information, a prima facie case of unpatentability of a claim (see 37 CFR 1.56(b)) in the IDS of the AESD.
(3) Applicant **is** required to cite the reference that discloses the most limitations in the independent claim.
(4) Applicant **is** required to cite any reference that discloses a limitation of an independent claim that is not shown in the other references.
(5) Applicant **is** required to cite any reference that discloses a limitation of a dependent claim that is not shown in the other references.

Applicant's statement that there are no disclosed features that are unclaimed at this time that may be claimed later is noted.

As to condition II.6.2, there currently is not an adequate listing of all the limitations (or portions thereof) in **each** of the claims (not just the independent claims) that are disclosed in each of the cited references, specifying where each of the limitations (or portions thereof) are disclosed in each of the references. The analysis looks to be only dealing with independent claims 1 and 12. Each of the claims, including every dependent claim, needs to also be so analyzed.

As to condition II.6.3, the petition does not appear to include a detailed explanation of claim patentability over each of the references. One is needed which needs to specify how each of the claims are patentable over each of the cited references. The explanation needs to specify how each of the claims (not just the independent claims) are patentable over each of the cited references, which includes the need to specify whether each of the dependent claims are separately patentable beyond the limitations contained in the independent claims, and if so how, or a statement made that the dependent claims are not separately patentable. Specifically, the explanation of patentability does not make clear exactly what limitations are being relied upon for the patentability of each of the claims over the cited references. While an explanation of the art is provided, which includes how the art does not teach the claims in general terms, it is suggested that the applicant recite specifically, in terms of the language of the claims, what limitations make each of the claims patentable. This will be needed for each of the claims, including how the dependent claims are separately patentable from the claims they are dependent upon, or a statement that they are not separately patentable.

As to condition to II.6.5, the showing of where each limitation of each of the claims finds support under 35 USC 112 in the written description of the application is insufficient. For each claimed limitation (including dependent claims) the petition needs to identify specific passages, or at least a single paragraph where each limitation is supported. While the listing of support in the instant application appears to be quite broad, it is

considered to be minimally acceptable, however, the showing of support in the provisional applications is insufficient and unclear. Similar support (if any) for the claimed invention must additionally be shown in the parent application upon which priority is claimed under 35 USC 119(e). Specifically, for provisional application 61/449,604, a listing of where the limitations of the claims find support is provided only for claims 1-9 and 12. It is not clear if the other claims are supported or not. This needs to be made clear. Also applicant indicates that Fig.10 is supported by Fig. 2C. This looks to be an error. For provisional 61/411,928 applicant only deals with claims 1-10, and for 61/379,410 applicant only deals with claim 1. It is again not clear if the other claims are supported or not. For all 3 of the provisional applications, above, the broad locations of support are insufficient. For each claimed limitation (including dependent claims) the petition needs to identify specific passages, or at least a single paragraph where each limitation is supported. Listing broadly a figure or a number of paragraphs does not comply with what is required.

The USPTO website has an example of the proper manner of documenting limitations taught by cited art, and the manner of explaining claim patentability over the references, for an Accelerated Examination Support Document at: http://www.uspto.gov/web/patents/accelerated/.

Therefore, the petition fails to meet the required conditions to be accorded special status under the accelerated examination procedure.

DECISION

For the above-stated reasons, the petition is **DISMISSED**. The application will therefore be taken up by the examiner for action in its regular turn.

Petitioner is given a single opportunity to perfect the petition. Any request for reconsideration of this decision must be submitted within 1 (one) month or 30 (thirty) days, whichever is longer, (no extension of time under 37 CFR 1.136(a)) from the date of this decision in order to be considered timely. Any request for reconsideration must address the deficiencies indicated above.

Petitioner is reminded that, upon granting of the special status of the application on request for reconsideration, the application will be processed expeditiously. However, due to the dismissal of the instant petition, examination may not be completed within twelve months of the filing date of the application.

Any inquiry regarding this decision should be directed to Quality Assurance Specialist Steven N. Meyers, at (571) 272-6611.

Steven N. Meyers,
Quality Assurance Specialist
Technology Center 3600

Sm/sm: 8/3/11

UNITED STATES PATENT AND TRADEMARK OFFICE

UNITED STATES DEPARTMENT OF COMMERCE
United States Patent and Trademark Office
Address: COMMISSIONER FOR PATENTS
P.O. Box 1450
Alexandria, Virginia 22313-1450
www.uspto.gov

APPLICATION NO.	FILING DATE	FIRST NAMED INVENTOR	ATTORNEY DOCKET NO.	CONFIRMATION NO..
13/180,571	07/12/2011	Pinky Yin Wah POON	P3496US02	2684

95527 7590 09/14/2011

Ella Cheong Hong Kong
5001 Hopewell Centre, 183 Queen's Road East,
Wan Chai,
HONG KONG

EXAMINER	
ART UNIT	PAPER NUMBER
3633	

NOTIFICATION DATE	DELIVERY MODE
09/14/2011	ELECTRONIC

Please find below and/or attached an Office communication concerning this application or proceeding.

The time period for reply, if any, is set in the attached communication.

Notice of the Office communication was sent electronically on above-indicated "Notification Date" to the following e-mail address(es):

mburke@ellacheong.com
syip@ellacheong.com
ewong@ellacheong.com

UNITED STATES PATENT AND TRADEMARK OFFICE

Commissioner for Patents
United States Patent and Trademark Office
P.O. Box 1450
Alexandria, VA 22313-1450
www.uspto.gov

SEP 13 2011

Ella Cheong Hong Kong
5001 Hopewell Centre, 183 Queen's Road East,
Wan Chai, HK Hong Kong

In re application of : **DECISION ON PETITION**
Pinky Yin Wah Poon : **TO MAKE SPECIAL FOR**
Application No. 13/180,571 : **NEW APPLICATION**
Filed: July 12, 2011 : **UNDER 37 CFR 1.102**
For: GROUTLESS WALL TILE SYSTEMS

This is a decision on the renewed petition filed on September 9, 2011, to make the above-identified application special for accelerated examination procedure under 37 C.F.R. § 1.102(d).

The renewed petition to make the application special is **GRANTED**.

The indication in the Supplemental AESD that claims 2-11 and 13-19 "have no features that would define over the references if Claims 1 and 12 are found to be unpatentable" is noted.

The application is eligible for accelerated examination and the petition complies with the conditions for granting the application special status pursuant to the "Change to Practice for Petitions in Patent Applications to Make Special and for Accelerated Examination" published June 26, 2006, in the Federal Register. (71 Fed. Reg. 36323).

The prosecution of the instant application will be conducted expeditiously according to the following guidelines.

1. The application will be docketed to an examiner and taken up for action within two weeks of the date of this decision.

2. Restriction Practice:
If the examiner determines that the claims are not directed to a single invention, a telephone request to elect one single invention will be made pursuant to MPEP 812.01. As a prerequisite to the grant of this petition, the applicant has agreed to make an oral election, by telephone, without traverse. If the applicant refuses to

make an election without traverse, or the examiner cannot reach the applicant after a reasonable effort, the examiner will treat the first claimed invention (invention defined by claim 1) as having being constructively elected without traverse for examination.

3. Office action:
If it is determined that, after appropriate consultation, there is a potential rejection or any other issue to be addressed, the examiner will telephone the applicant and arrange an interview to discuss and resolve the issue. An Office action, other than a Notice of Allowance and Fee(s) Due (Notice of Allowance), will not be issued unless either: 1) an interview was conducted but did not result in agreed to action that places the application in condition for allowance, or, 2) a determination is made that an interview would be unlikely to result in the application being placed in condition for allowance, and 3) an internal conference has been held to review any rejection of any claim.

4. Time for Reply:
An Office action other than a Notice of Allowance or a final Office action will set a shortened statutory period of one month or thirty days, whichever is longer, for reply with no extension of time available under 37 CFR 1.136(a). Failure to timely file a reply within this non-extendible period for reply will result in the abandonment of the application.

5. Reply by Applicant:
A timely reply to an Office action other than the Notice of Allowance must be submitted electronically via EFS or EFS-web and limited to addressing the rejections, objections and requirement made. Any amendment that attempts to: 1) add claims which would result in more than three pending independent claims or more than twenty pending total claims; 2) present claims not encompassed by the pre-examination search or an updated accelerated examination support document; or 3) present claims that are directed to a non-elected invention or an invention other than that previously claimed and examined in the application, will be treated as not fully responsive and will not be entered.

For any amendment to the claims (including any new claim) that is not encompassed by the accelerated examination support document, applicant must provide an updated accelerated examination support document that encompasses the amended or new claims at the time of filing of the amendment.

To proceed expeditiously with the examination, it is recommended that a reply with amendments made to any claim or with any new claim being added be accompanied by an updated accelerated examination support document or a statement explaining how the amended or new claim is supported by the original accelerated examination support document.

6. Information Disclosure Statement (IDS):
Any IDS filed during prosecution must be submitted electronically via EFS or EFS-web, accompanied by an updated accelerated examination support document, and be in compliance with 37 CFR 1.97 and 1.98.

7. Post-Allowance Processing:
To expedite processing of the allowed application into a patent, the applicant must: 1) pay the required fees within one month of the date of the Notice of Allowance, and 2) not file any post allowance papers not required by the Office. In no event may the issue fee be paid and accepted later than three months from the date of the Notice of Allowance.

8. After-Final and Appeal Procedures:
To expedite prosecution, after receiving the final Office action, applicant must: 1) promptly file a notice of appeal, an appeal brief and appeal fees; and 2) not request a pre-appeal brief conference.

Any amendment, affidavit or other evidence filed after final Office action must comply with applicable rules and the requirements outlined in numbered paragraphs 5 and 6 above.

On appeal, the application will proceed according to normal appeal procedures. After appeal, the application will again be treated special.

9. Proceedings Outside the Normal Examination Process:
If the application becomes involved in a proceeding that is outside the normal examination process (e.g., a secrecy order, national security review, interference proceeding, petitions under 37 CFR 1.181, 182 or 183), the application will be treated special before and after such proceeding.

10. Final Disposition:
The twelve month goal of this accelerated examination procedure ends with a final disposition. The mailing of a final Office action, a Notice of Allowance, the filing of a Notice of Appeal, or the filing of a Request for Continued Examination (RCE) is the final disposition.

If, during prosecution, a paper is not filed electronically using EFS-web, a reply is filed but is not fully responsive, the application is involved in an appeal, or a proceeding outside normal examination process, the application will still be examined expeditiously, however, the final disposition may occur more than twelve months from the filing of the application.

Any inquiry regarding this decision should be directed to Quality Assurance Specialist Steven N. Meyers, at (571) 272-6611.

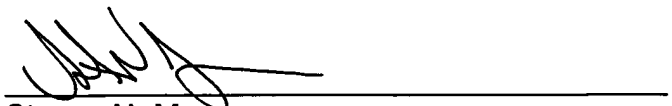

Steven N. Meyers,
Quality Assurance Specialist
Technology Center 3600

Sm/sm: 9/12/11

UNITED STATES PATENT AND TRADEMARK OFFICE

UNITED STATES DEPARTMENT OF COMMERCE
United States Patent and Trademark Office
Address: COMMISSIONER FOR PATENTS
P.O. Box 1450
Alexandria, Virginia 22313-1450
www.uspto.gov

APPLICATION NO.	FILING DATE	FIRST NAMED INVENTOR	ATTORNEY DOCKET NO.	CONFIRMATION NO.
13/180,571	07/12/2011	Pinky Yin Wah POON	P3496US02	2684

95527 7590 12/02/2011

Ella Cheong Hong Kong
5001 Hopewell Centre, 183 Queen's Road East,
Wan Chai,
HONG KONG

EXAMINER	
DUNN, DAVID R	

ART UNIT	PAPER NUMBER
3636	

NOTIFICATION DATE	DELIVERY MODE
12/02/2011	ELECTRONIC

Please find below and/or attached an Office communication concerning this application or proceeding.

The time period for reply, if any, is set in the attached communication.

Notice of the Office communication was sent electronically on above-indicated "Notification Date" to the following e-mail address(es):

mburke@ellacheong.com
syip@ellacheong.com
ewong@ellacheong.com

UNITED STATES PATENT AND TRADEMARK OFFICE

Commissioner for Patents
United States Patent and Trademark Office
P.O. Box 1450
Alexandria, VA 22313-1450
www.uspto.gov

DEC 0 1 2011

Ella Cheong Hong Kong
5001 Hopewell Centre
183 Queen's Road, East
Wan Chai, HONG KONG

In re Application of
Pinky Yin Wah Poon
Application No. 13/180,571
Filed: July 12, 2011
For: Groutless Wall Tile Systems

: Petition to Accept Color
: Photographs Under
: 37 C.F.R. 1.84(b)(2)

This is a decision on applicant's petition under 37 CFR 1.84(b)(2) filed on November 9, 2011 requesting the acceptance of color photographs for the above-identified application.

The petition is **DENIED**.

The invention is directed to a groutless wall tile system. The color associated with the photographs is only being used to show the different colors of tiles used in the tile system.

The petitioner is requesting the acceptance of color photographs because:

> *Color photographs are necessary as the only practical medium by which aspects of the claimed subject matter may be accurately conveyed.*

The criteria for accepting color photographs in a patent application is set forth MPEP 608.02 VIII Color Drawings or Color Photographs and 37 CFR 1.84(b)(2) Standards for drawings. 37 CFR 1.84(b)(2) states:

> *Color photographs. Color photographs will be accepted in utility and design patent applications if the conditions for accepting color drawings and black and white photographs have been satisfied. See paragraphs (a)(2) and (b)(1) of this section.*

Also, section 37 CFR 1.84(a)(2) states:

> *Color. On rare occasions, color drawings may be necessary as the only practical medium by which to disclose the subject matter sought to be patented in a utility or design patent application or the subject matter of a statutory invention registration.*

Additionally, the petition must include:

(i) The fee set forth in 37 CFR 1.17(h)

(ii) Three (3) sets of color drawings (unless filed electronically via EFS-Web, only one set of color drawings must be submitted in accordance with the guidelines set forth in 2010)

(iii) An amendment to the specification to insert (unless the specification contains or has been previously amended to contain) the following language as the first paragraph of the brief description of the drawings:

> *The patent or application file contains at least one drawing executed in color. Copies of this patent or patent application publication with color drawing(s) will be provided by the Office upon request and payment of the necessary fee.*

With regard to the criteria for accepting color drawings, as set forth above, the use of color drawings in the application under consideration is not considered the only practical medium for disclosing the subject matter to be patented. The application has numerous other drawings which provide a detailed explanation of the invention and the proposed color drawings (Figures 1, 6A, and 6B) are only relying on the use of color for convenience and to show a merely aesthetic feature, i.e. the color of a decorative tile.

Drawing Figures 1, 6A, and 6B could be easily modified by using different shading. Such a modification to the drawings would make them as easy to understand as the proposed color drawings.

Accordingly, the request for the acceptance of color photographs in this application is **DENIED**.

In order to expedite prosecution, it is suggested that the applicant cancel all references and the subject matter in the specification which refers to the color drawings under the **BRIEF DESCRIPTION OF THE DRAWINGS**.

Brian E. Glessner
Supervisory Patent Examiner
Art Unit 3633
571-272-6754
Beg 11/29/2011

UNITED STATES PATENT AND TRADEMARK OFFICE

UNITED STATES DEPARTMENT OF COMMERCE
United States Patent and Trademark Office
Address: COMMISSIONER FOR PATENTS
P.O. Box 1450
Alexandria, Virginia 22313-1450
www.uspto.gov

APPLICATION NO.	FILING DATE	FIRST NAMED INVENTOR	ATTORNEY DOCKET NO.	CONFIRMATION NO.
13/180,611	07/12/2011	Takeru KINOSHITA	381728US99CONT	2784

7590 03/26/2012

OBLON, SPIVAK, MCCLELLAND MAIER & NEUSTADT, L.L.P.
1940 DUKE STREET
ALEXANDRIA, VA 22314

EXAMINER	
ART UNIT	PAPER NUMBER
1724	

NOTIFICATION DATE	DELIVERY MODE
03/26/2012	ELECTRONIC

DECISION GRANTING PETITION UNDER 37 CFR 1.138(d)

The declaration of express abandonment is recognized

This is in response to the petition under 37 CFR 1.138(d), requesting for a refund of any previously paid search fee and excess claims fee in the above-identified application.

The petition is granted.

The express abandonment is recognized. Any previously paid search fee and excess claims fee are hereby refunded.

Telephone inquiries should be directed to the Office of Data Management at (571) 272-4200.

Patent Publication Branch
Office of Data Management

UNITED STATES PATENT AND TRADEMARK OFFICE

Commissioner for Patents
United States Patent and Trademark Office
P.O. Box 1450
Alexandria, VA 22313-1450
www.uspto.gov

BACON & THOMAS, PLLC
625 SLATERS LANE
FOURTH FLOOR
ALEXANDRIA VA 22314-1176

MAILED

SEP 26 2011

OFFICE OF PETITIONS

In re Application of :
Saito, et al. :
Application No. 13/180,632 : DECISION REFUSING STATUS
Filed: July 12, 2011 : UNDER 37 CFR 1.47(a)
Attorney Docket No. **SAIT3016/EM** :
For: **PHOTOMETRY DEVICE**

This is a decision on the petition under 37 CFR 1.47(a), filed September 20, 2011.

The petition under 37 CFR 1.47(a) is **dismissed.**

Any request for reconsideration under this decision must be submitted within TWO (2) MONTHS from the mail date of this decision. Extensions of time under 37 CFR 1.136(a) are permitted. Failure to respond will result in the abandonment of this application. Any response should be titled "Request for Reconsideration of Petition Under 37 CFR 1.47(a).

The above-identified application was filed on July 12, 2011, without an executed oath or declaration. Accordingly, a "Notice to File Missing Parts Nonprovisional Application" (the "Notice") was mailed on July 26, 2011, requiring an executed oath or declaration and a surcharge for the late filing of the oath or declaration. The petition under 37 CFR 1.47(a) was filed on September 20, 2011.

A grantable petition under 37 CFR 1.47(a) requires:

(1) proof that the non-signing inventor(s) cannot be reached or refuses to sign the oath or declaration after having been presented with the application papers (specification, claims, and drawings);

(2) an acceptable oath or declaration in compliance with 35 U.S.C. §§ 115 and 116;

(3) the petition fee,

(4) a statement of the last known address of the non-signing inventor,

The instant petition lacks items (1) and (2) as set forth above.

As to item (1), petitioner did not provide sufficient proof that inventor Nishioka cannot be located. Section 409.03(d) of the *Manual of Patent Examining Procedure* provides guidance as to what will suffice as sufficient proof that the non-signing inventor cannot be reached as is alleged in the instant petition. This section states, in pertinent part, as follows:

> [w]here inability to find or reach a nonsigning inventor "after diligent effort" is the reason for filing under 37 CFR 1.47, a statement of facts should be submitted that fully describes the exact facts which are relied on to establish that a diligent effort was made.
>
> The statement of facts must be signed, where at all possible, **by a person having firsthand knowledge** of the facts recited therein. Statements based on hearsay will not normally be accepted. Copies of documentary evidence such as Internet searches, certified mail, return receipts, cover letters of instructions, telegrams, that support a finding that the nonsigning inventor could not be found or reached should be made part of the statement. The steps taken to locate the whereabouts of the nonsigning inventor should be included statement of facts.

In order to satisfy the diligence requirement, petitioner must provide evidence of efforts to locate inventor Nishioka in accordance with provided by MPEP 409.03(d) cited above.

Relative to item (2) above, As to item (2), Section 409.03 of the *Manual of Patent Examining Procedure* (MPEP) provides, in pertinent part, that:

> (A) All the available joint inventors must (1) make oath or declaration on their own behalf as required by 37 CFR 1.63 or 1.175 (see MPEP § 602 § 605.01, and § 1414) and (2) make oath or declaration on behalf of the nonsigning inventor as required by 37 CFR 1.64. An oath or declaration signed by all of the available joint inventors with the signature block of the nonsigning inventor(s) left blank may be treated as having been signed by all the available joint inventors on behalf of the nonsigning inventor(s), unless otherwise indicated.

The declaration filed September 20, 2011, appears to have a signature in the signature block for inventor Nishioka. The renewed petition must be accompanied by a copy of the declaration that leaves the signature block for inventor Nishioka blank.

It is further noted that the instant petition states that only a copy of the declaration and assignment were sent to the non-signing inventor. Before a refusal to join the prosecution of the application is assumed, petitioner must establish that a complete copy of the application papers was sent to the non-signing inventor. Further mailings to inventor Nishioka must include a complete copy of the application papers, including the specification, claims, drawings, and abstract, or the non-signing inventor cannot be deemed to have refused to join the application. See MPEP Section 409.03(d).

Further correspondence with respect to this matter should be addressed as follows:

By mail: Mail Stop Petitions
Commissioner for Patents
P.O. Box 1450
Alexandria, VA 22313-1450

By FAX: (571) 273-8300
Attn: Office of Petitions

Telephone inquiries concerning this decision should be directed to the undersigned at (571) 272-3222.

/Kenya A. McLaughlin/

Kenya A. McLaughlin
Petitions Attorney
Office of Petitions

Doc code : PET.OP.AGE
Description : Petition to make special based on Age/Health

PTO/SB/130 (07-09)
Approved for use through 07/31/2012. OMB 0651- 0031
U.S. Patent and Trademark Office; U.S. DEPARTMENT OF COMMERCE
Under the Paperwork Reduction Act of 1995, no persons are required to respond to a collection of information unless it contains a valid OMB control number

PETITION TO MAKE SPECIAL BASED ON AGE FOR ADVANCEMENT OF EXAMINATION UNDER 37 CFR 1.102(c)(1)

Application Information

Application Number	13/180,717	Confirmation Number	2980	Filing Date	2011-07-12
Attorney Docket Number (optional)	00130-1US	Art Unit		Examiner	
First Named Inventor	Marshall MEDOFF				
Title of Invention	PROCESSING HYDROCARBONS				

Attention: Office of Petitions

An application may be made special for advancement of examination upon filing of a petition showing that the applicant is 65 years of age, or more. No fee is required with such a petition. See 37 CFR 1.102(c)(1) and MPEP 708.02 (IV).

APPLICANT HEREBY PETITIONS TO MAKE SPECIAL FOR ADVANCEMENT OF EXAMINATION IN THIS APPLICATION UNDER 37 CFR 1.102(c)(1) and MPEP 708.02 (IV) ON THE BASIS OF THE APPLICANT'S AGE.

A grantable petition requires one of the following items:
(1) Statement by one named inventor in the application that he/she is 65 years of age, or more; or
(2) Certification by a registered attorney/agent having evidence such as a birth certificate, passport, driver's license, etc. showing one named inventor in the application is 65 years of age, or more.

Name of Inventor who is 65 years of age, or older

Given Name	Middle Name	Family Name	Suffix
Marshall		MEDOFF	

A signature of the applicant or representative is required in accordance with 37 CFR 1.33 and 10.18. Please see 37 CFR 1.4(d) for the format of the signature.

Select (1) or (2) :

○ (1) I am an inventor in this application and I am 65 years of age, or more.

● (2) I am an attorney or agent registered to practice before the Patent and Trademark Office, and I certify that I am in possession of evidence, and will retain such in the application file record, showing that the inventor listed above is 65 years of age, or more.

Signature	/Celia H. Leber/	Date (YYYY-MM-DD)	2011-07-12
Name	Celia H. Leber	Registration Number	33524

PTO/SB/130 (07-09)
Approved for use through 07/31/2012. OMB 0651- 0031
U.S. Patent and Trademark Office; U.S. DEPARTMENT OF COMMERCE
Under the Paperwork Reduction Act of 1995, no persons are required to respond to a collection of information unless it contains a valid OMB control number

Privacy Act Statement

The Privacy Act of 1974 (P.L. 93-579) requires that you be given certain information in connection with your submission of the attached form related to a patent application or patent. Accordingly, pursuant to the requirements of the Act, please be advised that: (1) the general authority for the collection of this information is 35 U.S.C. 2(b)(2); (2) furnishing of the information solicited is voluntary; and (3) the principal purpose for which the information is used by the U.S. Patent and Trademark Office is to process and/or examine your submission related to a patent application or patent. If you do not furnish the requested information, the U.S. Patent and Trademark Office may not be able to process and/or examine your submission, which may result in termination of proceedings or abandonment of the application or expiration of the patent.

The information provided by you in this form will be subject to the following routine uses:

1. The information on this form will be treated confidentially to the extent allowed under the Freedom of Information Act (5 U.S.C. 552) and the Privacy Act (5 U.S.C. 552a). Records from this system of records may be disclosed to the Department of Justice to determine whether the Fr eedom of Information Act requires disclosure of these records.

2. A record from this system of records may be disclosed, as a routine use, in the course of presenting evidence to a court, magistrate, or administrative tribunal, including disclosures to opposing counsel in the course of settlement negotiations.

3. A record in this system of records may be disclosed, as a routine use, to a Member of Congress submitting a request involving an individual, to whom the record pertains, when the individual has requested assistance from the Member with respect to the subject matter of the record.

4. A record in this system of records may be disclosed, as a routine use, to a contractor of the Agency having need for the information in order to perform a contract. Recipients of information shall be required to comply with the requirements of the Privacy Act of 1974, as amended, pursuant to 5 U.S.C. 552a(m).

5. A record related to an International Application filed under the Patent Cooperation Treaty in this system of records may be disclosed, as a routine use, to the International Bureau of the World Intellectual Property Organization, pursuant to the Patent Cooperation Treaty.

6. A record in this system of records may be disclosed, as a routine use, to another federal agency for purposes of National Security review (35 U.S.C. 181) and for review pursuant to the Atomic Energy Act (42 U.S.C. 218(c)).

7. A record from this system of records may be disclosed, as a routine use, to the Administrator, General Services, or his/her designee, during an inspection of records conducted by GSA as part of that agency's responsibility to recommend improvements in records management practices and programs, under authority of 44 U.S.C. 2904 and 2906. Such disclosure shall be made in accordance with the GSA regulations governing inspection of records for this purpose, and any other relevant (i.e., GSA or Commerce) directive. Such disclosure shall not be used to make determinations about indivi duals.

8. A record from this system of records may be disclosed, as a routine use, to the public after either publication of the application pursuant to 35 U.S.C. 122(b) or issuance of a patent pursuant to 35 U.S.C. 151. Further, a record may be disclosed, subject to the limitations of 37 CFR 1.14, as a routine use, to the public if the record was filed in an application which became abandoned or in which the proceedings were terminated and which application is referenced by either a published application, an application open to public inspections or an issued patent.

9. A record from this system of records may be disclosed, as a routine use, to a Federal, State, or local law enforcement agency, if the USPTO becomes aware of a violation or potential violation of law or regulation.

UNITED STATES PATENT AND TRADEMARK OFFICE

Commissioner for Patents
United States Patent and Trademark Office
P.O. Box 1450
Alexandria, VA 22313-1450
www.uspto.gov

In re Application of
Marshall Medoff

Application No. 13180717

Filed:

Attorney Docket No. 08896-0096002

:DECISION ON PETITION TO MAKE SPECIAL
:UNDER 37 CFR 1.102(c)(1)

This is a decision on the electronic petition under 37 CFR 1.102 (c)(1), filed 12-JUL-2011 to make the above-identified application special based on applicant's age as set forth in MPEP § 708.02, Section IV.

The petition is **GRANTED**.

A grantable petition to make an application special under 37 CFR 1.102(c)(1), MPEP § 708.02, Section IV: Applicant's Age must include a statement by applicant or a registered practitioner having evidence that applicant is at least 65 years of age. No fee is required.

Accordingly, the above-identified application has been accorded "special" status and will be taken up for action by the examiner upon the completion of all pre-examination processing.

Telephone inquiries concerning this electronic decision should be directed to the Electronic Business Center at 866-217-9197.

All other inquiries concerning either the examination or status of the application should be directed to the Technology Center.

UNITED STATES PATENT AND TRADEMARK OFFICE

Commissioner for Patents
United States Patent and Trademark Office
P.O. Box 1450
Alexandria, VA 22313-1450
www.uspto.gov

MAILED

DEC 19 2011

OFFICE OF PETITIONS

MAIER & MAIER, PLLC
1000 DUKE STREET
ALEXANDRIA, VA 22314

In re Application of :
King and Harbinson :
Application No. 13/180,722 : Decision Refusing to Accord
Filed: July 12, 2011 : Status Under 37 CFR 1.47(a)
Attorney Docket No. PC-001-US :
For: A Photograph Retention Assembly :

This is a decision on the petition under 37 CFR 1.47(a) filed November 25, 2011.

The petition is **DISMISSED**.

Any request for reconsideration of this decision must be submitted within TWO (2) MONTHS from the mail date of this decision. Extensions of time under 37 CFR 1.136(a) are permitted. No further petition fee is required for the request. Any response should be entitled "Request for Reconsideration of Petition Under 37 CFR 1.47(a)" and may include an oath or declaration executed by the current non-signing inventor(s). **Failure to respond will result in abandonment of the application.**

A grantable petition under 37 CFR 1.47(a) requires

(1) Proof that the non-signing inventor cannot be found or reached after diligent effort or that the inventor refused to sign the declaration after having been presented with the application papers (specification, claims, and drawings),
(2) A proper oath or declaration executed by the available joint inventor(s),
(3) The fee of $200 as specified in 37 CFR 1.17(g), and
(4) The last known address of the non-signing inventor(s).

The instant petition fails to satisfy requirements (1), (2), and (4) set forth above.

A copy of the application papers, a combined declaration and power of attorney, and an assignment were mailed to and received by inventor David Harbinson. On October 20, 2011, Harbinson informed Darren Mitchell that Harbinson would sign the papers and return them during the week commencing October 24, 2011. Mitchell indicates, as of November 21, 2011, Harbinson has not returned the papers or contacted Mitchell.

In some situations, a failure by an inventor to respond to a communication requesting the inventor sign and return a document can be construed to be constructive refusal to sign the document. However, in this case, the inventor clearly agreed to sign the declaration and the firm's failure to receive the declaration might be the result of the declaration being lost in the mail or the result of a misunderstanding on the part of the inventor. In view of these facts, and the absence of any explanation for Mitchell's failure to make any further attempt to contact the inventor to inquire into the firm's non-receipt of the declaration, the current record is insufficient to prove constructive refusal by Harbinson to sign the declaration. An individual, who does not need to be Mitchell, should attempt to contact Harbinson by telephone to determine if has previously signed the declaration and/or is willing to sign a new declaration.

A declaration must identify provide a residential and mailing address for each inventor unless such information is supplied in an application data sheet ("ADS"). The declaration and ADS filed November 25, 2011, list an address for Nexfoto Limited as Harbinson's mailing address. However, the record strongly implies Harbinson was not employed by Nexfoto Limited at the time the ADS and declaration were submitted. Therefore, neither the declaration nor the ADS appear to include a proper mailing address for the inventor. Since neither document includes the required mailing address, the declaration is improper. Any request for reconsideration should either establish, or at least assert, Harbinson regularly receives correspondence at the Nexfoto Limited address or include a Supplemental ADS setting forth a correct mailing address for Harbinson.

A petition under 37 C.F.R. § 1.47 must identify a last known address for a non-signing inventor. Although the content of Exhibit A includes an apparent address for Harbinson, a last-known address is not actually listed in the petition. Any request for reconsideration should clearly identify Harbinson's last-known mailing address.

Further correspondence with respect to this matter may be submitted as follows:

By Internet: A request for reconsideration may be filed electronically using EFS Web.[1] Document Code "PET.OP" should be used if the request is filed electronically.

By mail:
Mail Stop Petition
Commissioner for Patents
P.O. Box 1450
Alexandria, VA 22313-1450

By facsimile: (571) 273-8300
Attn: Office of Petitions

By hand:
U.S. Patent and Trademark Office
Customer Service Window
Randolph Building
401 Dulany Street
Alexandria, VA 22314

[1] General Information concerning EFS Web can be found at http://www.uspto.gov/patents/process/file/efs/index.jsp.

Telephone inquiries regarding this communication should be directed to Petitions Attorney Steven Brantley at (571) 272-3203.

Charles Steven Brantley
Senior Petitions Attorney
Office of Petitions

UNITED STATES PATENT AND TRADEMARK OFFICE

Commissioner for Patents
United States Patent and Trademark Office
P.O. Box 1450
Alexandria, VA 22313-1450
www.uspto.gov

MAIER & MAIER, PLLC
1000 DUKE STREET
ALEXANDRIA, VA 22314

MAILED

MAR 16 2012

OFFICE OF PETITIONS

In re Application of :
King and Harbinson :
Application No. 13/180,722 :
Filed: July 12, 2011 :
Attorney Docket No. PC-001-US :
For: A Photograph Retention Assembly :

Decision According Status
Under 37 CFR 1.47(a)

This is a decision on the petition under 37 CFR 1.47(a) filed February 10, 2012.

The petition is **granted**.

The above-identified application and papers have been reviewed and found in compliance with 37 CFR 1.47(a). This application is hereby accorded Rule 47(a) status.

As provided in Rule 47(c), this Office will forward notice of this application's filing to the non-signing inventor at the address given in the petition. Notice of the filing of this application will also be published in the Official Gazette.

Technology Center Art Unit 3611 will be informed of the instant decision to ensure the Art Unit is aware the pending petition has been decided and that the application is in condition to be docketed to an examiner and examined in due course.

Telephone inquiries regarding this communication should be directed to Petitions Attorney Steven Brantley at (571) 272-3203.

Charles Steven Brantley
Senior Petitions Attorney
Office of Petitions

UNITED STATES PATENT AND TRADEMARK OFFICE

UNITED STATES DEPARTMENT OF COMMERCE
United States Patent and Trademark Office
Address: COMMISSIONER FOR PATENTS
P.O. Box 1450
Alexandria, Virginia 22313-1450
www.uspto.gov

APPLICATION NO.	FILING DATE	FIRST NAMED INVENTOR	ATTORNEY DOCKET NO.	CONFIRMATION NO.
13/180,737	07/12/2011	Matti Kullervo Jokimies	058108/407847	3022

826 7590 09/16/2011

ALSTON & BIRD LLP
BANK OF AMERICA PLAZA
101 SOUTH TRYON STREET, SUITE 4000
CHARLOTTE, NC 28280-4000

EXAMINER	
KIZOU, HASSAN	
ART UNIT	**PAPER NUMBER**
2472	
MAIL DATE	**DELIVERY MODE**
09/16/2011	PAPER

Please find below and/or attached an Office communication concerning this application or proceeding.

The time period for reply, if any, is set in the attached communication.

MAILED

SEP 16 2011

DIRECTOR OFFICE
TECHNOLOGY CENTER 2400

UNITED STATES PATENT AND TRADEMARK OFFICE

Commissioner for Patents
United States Patent and Trademark Office
P.O. Box 1450
Alexandria, VA 22313-1450
www.uspto.gov

Guy R. Gosnell
ALSTON & BIRD LLP
BANK OF AMERICA PLAZA
101 SOUTH TRYON STREET, SUITE 4000
CHARLOTTE, NC 28280-4000

In re Application of: JOKIMIES, M. et al.
Application No.: **13/180,737**
Attorney Docket No.: 058108/407847
Filed: July 12, 2011
For: METHOD AND APPARATUS FOR FACILITATING MACHINE-TYPE COMMUNICATION

DECISION ON REQUEST TO PARTICIPATE IN PATENT PROSECUTION HIGHWAY PROGRAM AND PETITION TO MAKE SPECIAL UNDER 37 CFR §1.102(a)

This is a decision on the request to participate in the Patent Prosecution Highway (PPH) program and the petition under 37 CFR §1.102(a), filed **July 12, 2011**, to make the above-identified application special.

The petition is **GRANTED.**

A grantable request to participate in the PPH program and petition to make special require:

(1) The U.S. application must (1) validly claims priority under 35 U.S.C. 119(a) and 37 CFR 1.55 to one or more corresponding UKIPO application(s) or to a PCT application that does not contain any priority claim, or (2) is a national stage entry of a PCT application that does not contain any priority claim;

(2) Applicant must submit a copy of the allowable/patentable claim(s) from the UKIPO application(s);

(3) All the claims in the U.S. application must sufficiently correspond or be amended to sufficiently correspond to the allowable/patentable claim(s) in the UKIPO application(s);

(4) Examination of the U.S. application has not begun;

(5) Applicant must submit a copy of all the office actions from each of the UKIPO application(s) containing the allowable/patentable claim(s);

(6) Applicant must submit an IDS listing the documents cited by the UKIPO examiner in the UKIPO office action along with copies of documents except U.S. patents or U.S. patent application publications.

The request to participate in the PPH program and petition are found to comply with all the above requirements. Accordingly, the above-identified application has been accorded **"special"** status.

Accordingly, the petition is **GRANTED.**

The application is being forwarded to the examiner for action on the merits commensurate with this decision.

Telephone inquiries concerning this decision should be directed to Beatriz Prieto at 571-272-3902. A second point of contact is Hassan Kizou at 571-272-3088.

All other inquiries concerning the examination or status of the application is accessible in the PAIR system at http://www.uspto.gov/ebc/index.html.

/Beatriz Prieto/

Beatriz Prieto, Quality Assurance Specialist
Technology Center 2400

Doc Code: PET.GREEN
Document Description: Petition for Green Tech Pilot

PTO/SB/420 (11-10)
Approved for use through 01/31/2011. OMB 0651-0062
U.S. Patent and Trademark Office; U.S. DEPARTMENT OF COMMERCE
Under the Paperwork Reduction Act of 1995, no persons are required to respond to a collection of information unless it displays a valid OMB control number.

PETITION TO MAKE SPECIAL UNDER THE GREEN TECHNOLOGY PILOT PROGRAM

Attorney Docket Number:	15042-80781	Application Number (if known):	13/180,867	Filing date: July 12, 2011

First Named Inventor:	Chieh-Hsien Chan
Title:	SCREEN-PRINTING METHOD AND METHOD FOR MANUFACTURING THIN-FILM SOLAR CELL

APPLICANT HEREBY REQUESTS TO PARTICIPATE IN THE GREEN TECHNOLOGY PILOT PROGRAM FOR THE ABOVE-IDENTIFIED APPLICATION. **See Instruction Sheet on page 2.**

This petition must be timely filed electronically using the USPTO electronic filing system, EFS-Web.

1. By filing this petition:

   Applicant is requesting early publication: Applicant hereby requests early publication under 37 CFR 1.219 and the publication fee set forth in 37 CFR 1.18(d) accompanies this request.

2. By filing this petition: applicant is agreeing to make an election without traverse in a telephonic interview and elect an invention that meets the eligibility requirements for the Green Technology Pilot Program, if the Office determines that the claims are not obviously directed to a single invention. See Instruction Sheet.

3. This request is accompanied by statements of special status for the eligibility requirement.

4. The application contains no more than three (3) independent claims and twenty (20) total claims.

5. The application does not contain any multiple dependent claims.

6. Other attachments: STATEMENT OF SPECIAL STATUS FOR THE ELIGIBILITY REQUIREMENT

Signature	/Tim Tingkang Xia/	Date	July 12, 2011
Name (Print/Typed)	Tim Tingkang Xia	Registration Number	45,242

***Note**: Signatures of all the inventors or assignees of record of the entire interest or their representative(s) are required in accordance with 37 CFR 1.33 and 11.18. Please see 37 CFR 1.4(d) for the form of the signature. If necessary, submit multiple forms if more than one signature, see below*.*

☐ *Total of 1 forms are submitted.

S/N 13/180,867

PATENT
Confirmation No.: 3253

IN THE UNITED STATES PATENT AND TRADEMARK OFFICE

Applicant:	Chieh-Hsien Chan.	Examiner:	Unassigned
Serial No.:	13/180,867	Group Art Unit:	Unassigned
Filed:	July 12, 2010	Docket:	15042-80781
Title:	SCREEN-PRINTING METHOD AND METHOD FOR MANUFACTURING THIN-FILM SOLAR CELL		

STATEMENT OF SPECIAL STATUS FOR THE ELIGIBILITY REQUIREMENT

Mail Stop: Petition
Commissioner of Patents
P.O. Box 1450
Alexandria, Virginia 22313-1450

July 12, 2011

CUSTOMER NO. 24728

Dear Sir/Madam:

This Statement of Special Status for the Eligibility Requirement is filed pursuant to the requirements listed in PTO/SB/420, filed herewith, and pursuant to the requirements of 74 Fed. Reg. 64,666 (Dec. 8, 2009), as amended by 75 Fed. Reg. 28,554 (May 21, 2010), and 75 Fed. Reg. 69,049 (November 10, 2010).

A basis for the special status is that aspects of the invention relate to ***thin film solar cells*** that ***materially contribute to the discovery or development of renewable energy resources***. Applicant respectfully submits that it is clear on the above-referenced application's face that the claimed invention materially contributes to ***the discovery or development of renewable energy resources***, so no statement is required explaining how the materiality standard is met.

The above-referenced application is a non-reissue, non-provisional utility application filed July 12, 2010 under 35 U.S.C. § 111(a). The application contains no more than three (3) independent claims and twenty (20) total claims. The application does not contain any multiple dependent claims. Further, applicant respectfully submits that the claims of the application are directed to a single invention of a solar cell and manufacturing method thereof. However, if the USPTO determines that the claims are directed to multiple inventions (e.g., in a restriction

requirement), applicant agrees to make an election without traverse in a telephonic interview, and elect an invention that meets the eligibility requirements.

A first Office action (including an Office action containing only a restriction requirement) has not yet appeared in the Patent Application Information Retrieval (PAIR) system.

A request for early publication of the present application in compliance with 37 CFR 1.219 and the publication fee set forth in 37 CFR 1.18(d) are concurrently accompanied herewith this petition.

It is believed that no fee is due. However, the Commissioner is hereby authorized to charge any petition fee under 37 CFR 1.102, and any deficiency of fees which may be required, or to credit of any overpayments to Deposit Account No. 50-3537.

The Applicant respectfully requests that a favorable decision on this Petition to Make Special Under the Green Technology Pilot Program be granted and the application be accorded special status under the Green Technology Pilot Program.

Respectfully submitted,

MORRIS, MANNING & MARTIN, LLP

July 12, 2011

Tim Tingkang Xia
Attorney for Applicant on the Record
Reg. No. 45,242

MORRIS, MANNING & MARTIN, LLP
1600 Atlanta Financial Center
3343 Peachtree Road, N.E.
Atlanta, Georgia 30326-1044
Phone: 404-233-7000
Direct: 404-495-3678
Customer No. 24728

UNITED STATES PATENT AND TRADEMARK OFFICE

UNITED STATES DEPARTMENT OF COMMERCE
United States Patent and Trademark Office
Address: COMMISSIONER FOR PATENTS
P.O. Box 1450
Alexandria, Virginia 22313-1450
www.uspto.gov

APPLICATION NO.	FILING DATE	FIRST NAMED INVENTOR	ATTORNEY DOCKET NO.	CONFIRMATION NO.
13/180,867	07/12/2011	Chieh-Hsien Chan	15042-80781	3253

24728 7590 08/22/2011
MORRIS MANNING MARTIN LLP
3343 PEACHTREE ROAD, NE
1600 ATLANTA FINANCIAL CENTER
ATLANTA, GA 30326

EXAMINER	
ART UNIT	PAPER NUMBER
1746	

NOTIFICATION DATE	DELIVERY MODE
08/22/2011	ELECTRONIC

Please find below and/or attached an Office communication concerning this application or proceeding.

The time period for reply, if any, is set in the attached communication.

Notice of the Office communication was sent electronically on above-indicated "Notification Date" to the following e-mail address(es):

ipdocket@mmmlaw.com
ppz@mmmlaw.com
jlsmith@mmmlaw.com

UNITED STATES PATENT AND TRADEMARK OFFICE

Commissioner for Patents
United States Patent and Trademark Office
P.O. Box 1450
Alexandria, VA 22313-1450
www.uspto.gov

MORRIS MANNING MARTIN LLP
3343 PEACHTREE ROAD, NE
1600 ATLANTA FINANCIAL CENTER
ATLANTA GA 30326

AUG 22 2011

In re Application of :
Chieh-Hsien Chan :
Application No. 13/180,867 :
Filed: July 12, 2011 :
Attorney Docket No. 15042-80781 :

DECISION ON PETITION
TO MAKE SPECIAL UNDER
THE GREEN TECHNOLOGY
PILOT PROGRAM

This is a decision on the petition under 37 CFR 1.102, filed July 12, 2011, to make the above-identified application special under the pilot program for applications pertaining to Green Technologies as set forth in 74 Federal Register Notice 64666 (December 8, 2009) and amended by 75 Federal Register Notice 28554 (May 21, 2010) and 75 Federal Register Notice 69049 (November 10, 2010).

The petition is **GRANTED**.

A grantable petition to make an application special under 37 CFR 1.102 and the pilot program as set forth in 74 FR 64666 must be directed to a nonprovisional application filed under 35 USC 111(a) or be a national stage entry under 35 USC 371, exclusive of any reissue applications.

In order to qualify for special status, the following requirements must be met. 1) The application must have no more than 3 independent claims and no more than 20 total claims. 2) The application must not contain any multiple dependent claims. 3) The petition must state the basis for seeking special status, i.e., the claimed invention either: A) materially enhances the quality of the environment or B) materially contributes to: i) the discovery or development of renewable energy resources, ii) the more efficient utilization and conservation of energy resources, or iii) greenhouse gas emission reduction. 4) If the disclosure is not clear on its face that the claimed invention materially contributes under category (A) or (B), the petition must be accompanied by a statement by the applicant, assignee, or an attorney/agent registered to practice before the Office explaining how the materiality standard is met. 5) A statement that applicant will agree to make an election without traverse in a telephonic interview if a restriction requirement is made by the examiner. 6) The petition to make special must be filed electronically. 7) The petition must be filed at least one day prior to the date that a first Office Action appears in the Patent Application Information Retrieval (PAIR) system. 8) The petition must be accompanied by a request for early publication in compliance with 37 CFR 1.219 and include the publication fee as set forth in 37 CFR 1.18(d).

The requirement for a fee for consideration of the petition to make special for applications pertaining to Green Technologies has been waived.

The instant petition complies with items 1 – 8 above. Accordingly, the above-identified application has been accorded "special" status.

Telephone inquires concerning this decision should be directed to Blaine Copenheaver at 571-272-1156.

The application is being forwarded to the examiner for action on the merits commensurate with this decision.

/Blaine Copenheaver/

Blaine Copenheaver
Quality Assurance Specialist
Technology Center 1700

Doc Code: PPH.PCT.652
Document Description: Petition to make special under PCT-Patent Pros Hwy

PTO/SB/20PCT-KR (06-10)
Approved for use through 01/31/2012. OMB 0651-0058
U.S. Patent and Trademark Office; U. S. DEPARTMENT OF COMMERCE
Under the Paperwork Reduction Act of 1995, no persons are required to respond to a collection of information unless it displays a valid OMB control number.

REQUEST FOR PARTICIPATION IN THE PATENT COOPERATION TREATY - PATENT PROSECUTION HIGHWAY (PCT-PPH) PILOT PROGRAM BETWEEN THE KOREAN INTELLECTUAL PROPERTY OFFICE (KIPO) AND THE USPTO

Application No:	13/180,886	Filing date:	July 12, 2011
First Named Inventor:	HUMPHREYS, Geoffrey		
Title of the Invention:	Digital Radiography Plate Identification System		

THIS REQUEST FOR PARTICIPATION IN THE PCT-PPH PILOT PROGRAM ALONG WITH THE REQUIRED DOCUMENTS MUST BE SUBMITTED VIA EFS-WEB. INFORMATION REGARDING EFS-WEB IS AVAILABLE AT HTTP://WWW.USPTO.GOV/EBC/EFS_HELP.HTML

APPLICANT HEREBY REQUESTS PARTICIPATION IN THE PCT-PPH PROGRAM AND PETITIONS TO MAKE THE ABOVE-IDENTIFIED APPLICATION SPECIAL UNDER THE PCT-PPH PROGRAM.

The above-identified application is (1) a national stage entry of the corresponding PCT application, or (2) a national stage entry of another PCT application which claims priority to the corresponding PCT application, or (3) a national application that claims domestic/ foreign priority to the corresponding PCT application, or (4) a national application which forms the basis for the priority claim in the corresponding PCT application, or (5) a continuing application of a U.S. application that satisfies one of (1) to (4) above, or (6) a U.S. application that claims domestic benefit to a U.S. provisional application which forms the basis for the priority claim in the corresponding PCT application.

The corresponding PCT application number(s) is/are: PCT/US2011/043668

The international filing date of the corresponding PCT application(s) is/are:
July 12, 2011

I. List of Required Documents:

a. **A copy of the latest international work product (WO/ISA, WO/IPEA, or IPER) in the above–identified corresponding PCT application(s)**

☑ Is attached.

☐ Is not attached because the document is already in the U.S. application.

b. **A copy of all claims which were indicated as having novelty, inventive step and industrial applicability in the above-identified corresponding PCT application(s).**

☑ Is attached.

☐ Is not attached because the document is already in the U.S. application.

c. **English translations of the documents in a. and b. above are attached (if the documents are not in the English language). A statement that the English translation is accurate is attached for the document in b. above.**

This collection of information is required by 35 U.S.C. 119, 37 CFR 1.55, and 37 CFR 1.102(d). The information is required to obtain or retain a benefit by the public, which is to file (and by the USPTO to process) an application. Confidentiality is governed by 35 U.S.C. 122 and 37 CFR 1.11 and 1.14. This collection is estimated to take 2 hours to complete, including gathering, preparing, and submitting the completed application form to the USPTO. Time will vary depending upon the individual case. Any comments on the amount of time you require to complete this form and/or suggestions for reducing this burden should be sent to the Chief Information Officer, U.S. Patent and Trademark Office, U.S. Department of Commerce, P.O. Box 1450, Alexandria, VA 22313-1450. DO NOT SEND FEES OR COMPLETED FORMS TO THIS ADDRESS.

PTO/SB/20PCT-KR (06-10)
Approved for use through 01/31/2012. OMB 0651-0058
U.S.Patent and Trademark Office; U.S. DEPARTMENT OF COMMERCE
Under the Paperwork Reduction Act of 1995, no persons are required to respond to a collection of information unless it displays a valid OMB control number.

REQUEST FOR PARTICIPATION IN THE PCT-PPH PILOT PROGRAM BETWEEN THE KIPO AND THE USPTO

(continued)

Application No.:	13/180,886
First Named Inventor:	HUMPHREYS, Geoffrey

d. **(1) An information disclosure statement listing the documents cited in the international work products (ISR, WO/ISA, WO/IPEA, IPER) of the corresponding PCT application.**

☐ Is attached

☑ Has already been filed in the above-identified U.S. application on February 24, 2012

(2) Copies of all documents (except) for U.S. patents or U.S. patent application publications)

☐ Are attached.

☑ Have already been filed in the above-identified U.S. application on February 24, 2012

II. Claims Correspondence Table:

Claims in US Application	Patentable Claims in the corresponding PCT Application	Explanation regarding the correspondence
1-23	1-23	Identical claims
24	1	Depends from patentable claim 1
25	1	Depends from patentable claim 1
26	5	Depends from patentable claim 5
27	13	Depends from patentable claim 13
28	13	Depends from patentable claim 13
29	13	Depends from claim 28, which depends from patentable claim 13
30	19	Depends from patentable claim 19
31	19	Depends from claim 30, which depends from patentable claim 19

III. All the claims in the US application sufficiently correspond to the patentable claims in the corresponding PCT application.

Signature	Date March 19, 2012
Name (Print/Typed) Margaret Efron	Registration Number 47,545

PCT/US2011/043668

RECEIVED
FEB 16 2012
Certified

PATENT COOPERATION TREATY

From the INTERNATIONAL SEARCHING AUTHORITY

To:

EFRON MARGARET H.

SALIWANCHIK, LLOYD & EISENSCHENK P.O. BOX 142950 GAINESVILLE FL 32614-2950 USA

PCT

NOTIFICATION OF TRANSMITTAL OF THE INTERNATIONAL SEARCH REPORT AND THE WRITTEN OPINION OF THE INTERNATIONAL SEARCHING AUTHORITY, OR THE DECLARATION

(PCT Rule 44.1)

Date of mailing *(day/month/year)*	09 FEBRUARY 2012 (09.02.2012)
Applicant's or agent's file reference: SPL.100XC1PCT	**FOR FURTHER ACTION** See paragraphs 1 and 4 below
International application No.: **PCT/US2011/043668**	International filing date *(day/month/year)*: **12 JULY 2011 (12.07.2011)**

Applicant

SMART PLATES, LLC et al

1. ☒ The applicant is hereby notified that the international search report and the written opinion of the International Searching Authority have been established and are transmitted herewith.

Filing of amendments and statement under Article 19:

The applicant is entitled, if he so wishes, to amend the claims of the international application (see Rule 46):

When? The time limit for filing such amendments is normally two months from the date of transmittal of the international search report.

Where? Directly to the International Bureau of WIPO, 34 chemin des Colombettes 1211 Geneva 20, Switzerland, Facsimile No.: +41 22 338 82 70

For more detailed instructions, see *PCT Applicant's Guide*, International Phase, paragraphs 9.004 . 9.011.

2. ☐ The applicant is hereby notified that no international search report will be established and that the declaration under Article 17(2)(a) to that effect and the written opinion of the International Searching Authority are transmitted herewith.

3. ☐ **With regard to any protest** against payment of (an) additional fee(s) under Rule 40.2, the applicant is notified that:

☐ the protest together with the decision thereon has been transmitted to the International Bureau together with any request to forward the texts of both the protest and the decision thereon to the designated Offices.

☐ no decision has been made yet on the protest; the applicant will be notified as soon as a decision is made.

4. **Reminders**

The applicant may submit comments on an informal basis on the written opinion of the International Searching Authority to the International Bureau. The International Bureau will send a copy of such comments to all designated Offices unless an international preliminary examination report has been or is to be established. Following the expiration of 30 months from the priority date, these comments will also be made available to the public.

Shortly after the expiration of **18 months** from the priority date, the international application will be published by the International Bureau. If the applicant wishes to avoid or postpone publication, a notice of withdrawal of the international application, or of the priority claim, must reach the International Bureau before the completion of the technical preparations for international publication (Rules 90bis.1 and 90bis.3).

Within **19 months** from the priority date, but only in respect of some designated Offices, a demand for international preliminary examination must be filed if the applicant wishes to postpone the entry into the national phase **until 30 months** from the priority date (in some Offices even later); otherwise, the applicant must, **within 20 months** from the priority date, perform the prescribed acts for entry into the national phase before those designated Offices.

In respect of other designated Offices, the time limit of **30 months** (or later) will apply even if no demand is filed within 19months.

For details about the applicable time limits, Office by Office, see www.wipo.int/pct/en/texts/time_limits.html and the PCT Applicant's Guide, National Chapters.

Name and mailing address of the ISA/KR: Korean Intellectual Property Office, Government Complex-Daejeon, 189 Cheongsa-ro, Seo-gu, Daejeon 302-701, Republic of Korea	Authorized officer: COMMISSIONER
Facsimile No. 82-42-472-7140	Telephone No. 82-42-481-8755

* Attention

Copies of the documents cited in the international search report can be searched in the following Korean Intellectual Property Office English website for three months from the date of mailing of the international search report.

http://www.kipo.go.kr/en/ => PCT Services => PCT Services

ID : PCT international application number
PW : **XYLUH97T**

Inquiries related to PCT International Search Report or Written Opinion prepared by KIPO as an International Searching Authority can be answered not only by KIPO but also through IPKC (Intellectual Property Korea Center), located in Vienna, VA, which functions as a PCT Help Desk for PCT applicants.

Homepage: http://www.ipkcenter.com
Email: ipkc@ipkcenter.com
Phone: +1 703 388 1066
Fax: +1 703 388 1084

PATENT COOPERATION TREATY

PCT

INTERNATIONAL SEARCH REPORT

(PCT Article 18 and Rules 43 and 44)

Applicant's or agent's file reference	FOR FURTHER ACTION	see Form PCT/ISA/220 as well as, where applicable, item 5 below.
SPL.100XC1PCT		
International application No.	International filing date *(day/month/year)*	(Earliest) Priority Date *(day/month/year)*
PCT/US2011/043668	**12 JULY 2011 (12.07.2011)**	12 JULY 2010 (12.07.2010)
Applicant		
SMART PLATES, LLC et al		

This International search report has been prepared by this International Searching Authority and is transmitted to the applicant according to Article 18. A copy is being transmitted to the International Bureau.

This international search report consists of a total of 3 sheets.

☐ It is also accompanied by a copy of each prior art document cited in this report.

1. **Basis of the report**
   a. With regard to the **language**, the international search was carried out on the basis of:
      ☒ the international application in the language in which it was filed
      ☐ a translation of the international application into _____, which is the language of a translation furnished for the purposes of international search (Rules 12.3(a) and 23.1(b))
   b. ☐ This international search report has been established taking into account the **rectification of an obvious mistake** authorized by or notified to this Authority under Rule 91 (Rule 43.6*bis*(a)).
   c. ☐ With regard to any **nucleotide and/or amino acid sequence** disclosed in the international application, see Box No. I.
2. ☐ **Certain claims were found unsearchable** (See Box No. II)
3. ☐ **Unity of invention is lacking** (See Box No. III)
4. With regard to the **title,**
   ☒ the text is approved as submitted by the applicant.
   ☐ the text has been established by this Authority to read as follows:
5. With regard to the **abstract,**
   ☒ the text is approved as submitted by the applicant.
   ☐ the text has been established, according to Rule 38.2, by this Authority as it appears in Box No. IV. The applicant may, within one month from the date of mailing of this international search report, submit comments to this Authority.
6. With regard to the drawings,
   a. the figure of the **drawings** to be published with the abstract is Figure No. _____
      ☐ as suggested by the applicant.
      ☐ as selected by this Authority, because the applicant failed to suggest a figure.
      ☐ as selected by this Authority, because this figure better characterizes the invention.
   b. ☒ none of the figure is to be published with the abstract.

INTERNATIONAL SEARCH REPORT

International application No.
PCT/US2011/043668

A. CLASSIFICATION OF SUBJECT MATTER

A61B 6/14(2006.01)i, G06F 19/00(2011.01)i, G06Q 50/00(2006.01)i

According to International Patent Classification (IPC) or to both national classification and IPC

B. FIELDS SEARCHED

Minimum documentation searched (classification system followed by classification symbols)
A61B 6/14; G06F 17/30

Documentation searched other than minimum documentation to the extent that such documents are included in the fields searched
Korean utility models and applications for utility models
Japanese utility models and applications for utility models

Electronic data base consulted during the international search (name of data base and, where practicable, search terms used)
eKOMPASS(KIPO internal) & Keywords: encode,radiographic image,identifier

C. DOCUMENTS CONSIDERED TO BE RELEVANT

Category*	Citation of document, with indication, where appropriate, of the relevant passages	Relevant to claim No.
A	US 2008-0084965 A1 (MEYER OHNONA et al.) 10 April 2008 See abstract, claim 1 and figure 8	1-23
A	US 06041102A A (FRANCSIS; KENNETH M.) 21 March 2000 See abstract, claim 1 and figure 1	1-23
A	EP 1649812 A1 (ELCA TECHNOLOGIES S.R.L.) 26 April 2006 See abstract, claim 1 and figure 4	1-23

☐ Further documents are listed in the continuation of Box C. ☒ See patent family annex

* Special categories of cited documents:
"A" document defining the general state of the art which is not considered to be of particular relevance
"E" earlier application or patent but published on or after the international filing date
"L" document which may throw doubts on priority claim(s) or which is cited to establish the publication date of citation or other special reason (as specified)
"O" document referring to an oral disclosure, use, exhibition or other means
"P" document published prior to the international filing date but later than the priority date claimed
"T" later document published after the international filing date or priority date and not in conflict with the application but cited to understand the principle or theory underlying the invention
"X" document of particular relevance; the claimed invention cannot be considered novel or cannot be considered to involve an inventive step when the document is taken alone
"Y" document of particular relevance; the claimed invention cannot be considered to involve an inventive step when the document is combined with one or more other such documents,such combination being obvious to a person skilled in the art
"&" document member of the same patent family

Date of the actual completion of the international search	Date of mailing of the international search report
26 JANUARY 2012 (26.01.2012)	**09 FEBRUARY 2012 (09.02.2012)**

Name and mailing address of the ISA/KR	Authorized officer
Korean Intellectual Property Office Government Complex-Daejeon, 189 Cheongsa-ro, Seo-gu, Daejeon 302-701, Republic of Korea Facsimile No 82-42-472-7140	KIM Tae Hoon Telephone No. 82-42-481-5728

Form PCT/ISA/210 (second sheet) (July 2009)

INTERNATIONAL SEARCH REPORT

Information on patent family members

International application No.
PCT/US2011/043668

Patent document cited in search report	Publication date	Patent family member(s)	Publication date
US 2008-0084965 A1	10.04.2008	EP 2076178 A2	08.07.2009
		FR 2906911 A1	11.04.2008
		FR 2906911 B1	01.05.2009
		US 7677798 B2	16.03.2010
		WO 2008-043893 A2	17.04.2008
		WO 2008-043893 A3	31.07.2008
		WO 2008-043893 A3	17.04.2008
US 06041102A A	21.03.2000	AU 1999-34684 A1	25.10.1999
		WO 99-51147 A1	14.10.1999
EP 1649812 A1	26.04.2006	CA 2517303 A1	15.04.2006
		IT B020040638 A1	15.01.2005
		US 2006-0083348 A1	20.04.2006
		US 7505558 B2	17.03.2009

PATENT COOPERATION TREATY

From the
INTERNATIONAL SEARCHING AUTHORITY

To:
EFRON MARGARET H.

SALIWANCHIK, LLOYD & EISENSCHENK P.O. BOX
142950 GAINESVILLE FL 32614-2950 USA

PCT

WRITTEN OPINION OF THE INTERNATIONAL SEARCHING AUTHORITY

(PCT Rule 43bis.1)

Date of mailing *(day/month/year)*	**09 FEBRUARY 2012 (09.02.2012)**
Applicant's or agent's file reference SPL.100XC1PCT	**FOR FURTHER ACTION** See paragraph 2 below

International application No.	International filing date *(day/month/year)*	Priority date *(day/month/year)*
PCT/US2011/043668	**12 JULY 2011 (12.07.2011)**	12 JULY 2010 (12.07.2010)

International Patent Classification (IPC) or both national classification and IPC

A61B 6/14(2006.01)i, G06F 19/00(2011.01)i, G06Q 50/00(2006.01)i

Applicant

SMART PLATES, LLC et al

1. This opinion contains indications relating to the following items:

- [X] Box No. I Basis of the opinion
- [ ] Box No. II Priority
- [ ] Box No. III Non-establishment of opinion with regard to novelty, inventive step and industrial applicability
- [ ] Box No. IV Lack of unity of invention
- [X] Box No. V Reasoned statement under Rule 43bis.1(a)(i) with regard to novelty, inventive step or industrial applicability; citations and explanations supporting such statement
- [ ] Box No. VI Certain documents cited
- [ ] Box No. VII Certain defects in the international application
- [ ] Box No. VIII Certain observations on the international application

2. **FURTHER ACTION**

If a demand for international preliminary examination is made, this opinion will be considered to be a written opinion of the International Preliminary Examining Authority ("IPEA") except that this does not apply where the applicant chooses an Authority other than this one to be the IPEA and the chosen IPEA has notified the International Bureau under Rule 66.1bis(b) that written opinions of this International Searching Authority will not be so considered.

If this opinion is, as provided above, considered to be a written opinion of the IPEA, the applicant is invited to submit to the IPEA a written reply together, where appropriate, with amendments, before the expiration of 3 months from the date of mailing of Form PCT/ISA/220 or before the expiration of 22 months from the priority date, whichever expires later.
For further options, see Form PCT/ISA/220.

Name and mailing address of the ISA/KR	Date of completion of this opinion	Authorized officer
Korean Intellectual Property Office Government Complex-Daejeon, 189 Cheongsa-ro, Seo-gu, Daejeon 302-701, Republic of Korea Facsimile No. 82-42-472-7140	26 JANUARY 2012 (26.01.2012)	KIM Tae Hoon Telephone No.82-42-481-5728

WRITTEN OPINION OF THE
INTERNATIONAL SEARCHING AUTHORITY

International application No.
PCT/US2011/043668

Box No. I Basis of this opinion

1. With regard to the **language**, this opinion has been established on the basis of :

   ☒ the international application in the language in which it was filed

   ☐ a translation of the international application into _____, which is the language of a translation furnished for the purposes of international search (Rules 12.3(a) and 23.1(b))

2. ☐ This opinion has been established taking into account the **rectification of an obvious mistake** authorized by or notified to this Authority under Rule 91 (Rule 43*bis*.1(a))

3. With regard to any **nucleotide and/or amino acid sequence** disclosed in the international application, this opinion has been established on the basis of:

   a. a sequence listing filed or furnished
      ☐ on paper
      ☐ in electronic form

   b. time of filing or furnishing
      ☐ contained in the international application as filed.
      ☐ filed together with the international application in electronic form.
      ☐ furnished subsequently to this Authority for the purposes of search.

4. ☐ In addition, in the case that more than one version or copy of a sequence listing has been filed or furnished, the required statements that the information in the subsequent or additioanl copies is identical to that in the application as filed or does not go beyond the application as filed, as appropriate, were furnished.

5. Additional comments:

WRITTEN OPINION OF THE INTERNATIONAL SEARCHING AUTHORITY

International application No.
PCT/US2011/043668

Box No. V Reasoned statement under Rule 43bis.1(a)(i) with regard to novelty, inventive step or industrial applicability; citations and explanations supporting such statement

1. Statement

Novelty (N)	Claims	1-23	YES
	Claims	NONE	NO
Inventive step (IS)	Claims	1-23	YES
	Claims	NONE	NO
Industrial applicability (IA)	Claims	1-23	YES
	Claims	NONE	NO

2. Citations and explanations :

Reference is made to the following documents:

D1: US 2008-0084965 A1 (MEYER OHNONA et al.) 10 April 2008
D2: US 06041102A A (FRANCSIS; KENNETH M.) 21 March 2000
D3: EP 1649812 A1 (ELCA TECHNOLOGIES S.R.L.) 26 April 2006

2.1 Novelty and Inventive Step
2.1.1 Claims 1,13 and 23
The subject matter of claim 1 differs from these prior art documents in that claim 1 comprises encoding each of a set of scannable image media with identifiers regarding image location, processing a set of digital data images with a processing sytem to ascertain whether any digital data image in the set of digital data images needs to be properly oriented. And it is not obvious to a person skilled in the art by the documents, taken alone or in combination. The same reasoning also applies to claims 13,23. Therefore, claims 1,13 and 23 meet the requirements of PCT Article 33(2) and (3) with respect to novelty and inventive step.

2.1.2 Claims 2-12,14-22
Claims 2-12,14-22 are dependent on claims 1,13, respectively, and therefore meet the requirements of PCT Article 33(2) and (3).

2.2 Industrial Applicability
Claims 1-23 are industrially applicable under PCT Article 33(4).

CLAIMS

I claim:

1. A method for automatically processing and orienting dental radiographic images comprising the steps of:

a) encoding each of a set of scannable image media with identifiers regarding image location and orientation;

b) reading the scannable image media with a scanning apparatus to produce a set of digital data images and transmitting the set of digital data images to a processing system; and

c) processing the set of digital data images and their identifiers within the processing system: to determine an image location for each digital data image within the first set of digital data images; to ascertain whether any digital data image in the set of digital data images needs to be properly oriented; and to automatically and properly orient any digital data image in the set of digital images ascertained to need proper orientation.

2. The method of claim 1, wherein the scannable image media further comprises a same standard identifier that groups together each scannable image medium in the set of scannable image media; and processing the set of digital data images with the same standard identifier to associate the set of digital data images with the set of scannable image media.

3. The method of claim 1, wherein the identifier is a visual and/or machine-recognizable identification.

4. The method of claim 3, wherein the identifier selected from the group consisting of: colors, numbers, alphabet letters, symbols, barcodes, electronic signals, and magnetic strips.

5. The method of claim 1, wherein the scannable image media is selected from the group consisting of: photostimulable phosphor plate, radiographic film, and photosensitive film.

6. The method of claim 1, wherein the processing system is located within the scanning apparatus.

7. The method of claim 6, further comprising the step of transmitting the processed set of digital data images to a computer system.

8. The method of claim 7, wherein the computer system can further perform any one or more of the following steps: store the processed set of digital data images; output the processed set of digital data images; maintain the processed set of digital data images; and detect and act upon user commands to manipulate the set or sets of digital data images.

9. The method of claim 1, wherein the processing system is separate from the scanning apparatus and is located within a computer system.

10. The method of claim 9, wherein the computer system can further perform any one or more of the following steps: store the processed set of digital data images; output the processed set of digital data images; maintain the processed set of digital data images; and detect and act upon user commands to manipulate the set of digital data images.

11. The method of claim 1, further comprising the step of providing encoding film holders for each scannable image medium of the set of scannable image media, wherein each film holder includes a visual identifier.

12. The method of claim 11, wherein the visual identifier is selected from the group consisting of colors, numbers, alphabet letters, symbols, and graphical representations of oral locations.

13. A system to automatically process and orient dental radiographic images, said system comprising:

a) a set of scannable image media encoded with identifiers regarding image location and orientation;

b) a scanning apparatus with the ability to read the scannable image media, produce a set of digital data images, and transmit the set of digital data images to a processing system; and

c) a processing system with the ability to determine an image location for each digital data image within the first set of digital data images; to ascertain whether any digital data image in the set of digital data images needs to be properly oriented; and to automatically and properly orient any digital data image in the set of digital images ascertained to need proper orientation.

14. The system of claim 13, wherein the set of scannable image media is also encoded with a same standard identifier to group together each scannable image medium in the set of scannable image media; and wherein the processing system further comprises the ability to associate the set of digital data images with the set of scannable image media based upon the same standard identifier.

15. The system of claim 13, wherein the identifier is a visual and/or machine-recognizable.

16. The system of claim 15, wherein the identifier is selected from the group consisting of: colors, numbers, alphabet letters, symbols, barcodes, electronic signals and magnetic strips.

17. The system of claim 13, wherein the scannable image media is selected from the group consisting of: photostimulable phosphor plate, radiographic film, and photosensitive film.

18. The system of claim 13, wherein the processing system is located within the scanning apparatus.

19. The system of claim 13, wherein the processing system is located with a computer system.

20. The system of claim 13, further comprising film holders for each scannable image medium of the set of scannable image media, wherein each film holder includes a visual identifier.

21. The system of claim 20, wherein the visual identifier is selected from the group consisting of colors, numbers, alphabet letters, symbols, and graphical representations of oral locations.

22. The system of claim 13, further comprising a graphical user interface.

23. A computer program product, tangibly embodied in an information carrier, for automatically processing and orienting dental radiographic images in a processing system, the product comprising instructions to cause the processing system to: associate a set of digital data images with a set of scannable image media; determine an image location for each digital data image within the first set of digital data images; ascertain whether any digital data image in the set of digital data images needs to be properly oriented; and automatically and properly orient any digital data image in the set of digital images ascertained to need proper orientation.

UNITED STATES PATENT AND TRADEMARK OFFICE

Commissioner for Patents
United States Patent and Trademark Office
P.O. Box 1450
Alexandria, VA 22313-1450
www.uspto.gov

DOBRUSIN & THENNISCH PC
29 W LAWRENCE ST
SUITE 210
PONTIAC MI 48342

MAILED
DEC 12 2011
OFFICE OF PETITIONS

In re Application of
Davis, et al.
Application No. 13/180,887
Filed: July 12, 2011
Atty. Dkt. No.: 1523-014

: DECISION REFUSING STATUS
: UNDER 37 CFR 1.47(a)

This decision is in response to the petition under 37 CFR 1.47(a) filed November 28, 2011.

The petition under 37 CFR 1.47(a) is **DISMISSED**.

Petitioners are given TWO MONTHS from the mailing date of this decision to reply, correcting the below-noted deficiencies. Any reply should be entitled "Request for Reconsideration of Petition Under 37 CFR 1.47(a)," and should only address the deficiencies noted herein. The reply under 37 CFR 1.47(a) may include an oath or declaration executed by the non-signing inventors. Any extensions of time will be governed by 37 CFR 1.136(a).

A grantable petition under 37 CFR 1.47(a) requires: (1) proof that the non-signing inventor cannot be reached or refuses to sign the oath or declaration after having been presented with the application papers (specification, claims and drawings); (2) an acceptable oath or declaration in compliance with 35 U.S.C. §§ 115 and 116; (3) the petition fee; and (4) a statement of the last known address of the non-signing inventor.

The instant petition fails to satisfy requirement (1) set forth above.

Petitioners have failed to establish that the non-signing inventor received a complete copy of the instant application papers (specification, including claims, drawings, and oath or declaration) and thereafter refused to execute an oath or declaration, or, that the non-signing inventor cannot be reached or located for presentation of the application papers.

Petitioners to indicate that the applications papers were emailed to the non-signing inventor and that to date, the inventor has not returned a signed declaration.

There is no indication in the record that the non-signing inventor acknowledged receipt of the complete application papers and thereafter refused to execute the oath or declaration for the above-identified application. Accordingly, it cannot be found that the non-signing inventors received a complete copy of the application papers via email.

To the extent that petitioners continue to communicate with the inventors via email and were to present the application papers to the inventor via email, any renewed petition must be accompanied by evidence which sufficiently establishes that the copy of the application papers forwarded to the inventor via email was in a form that could be read and comprehended by the intended recipient, and that it was in fact received, opened and read by the intended recipient.

Petitioners are required to establish that the non-signing inventor received a complete copy of the instant application before a refusal to sign an oath or declaration can be alleged. Where a refusal of the inventor to sign the application papers is alleged, the circumstances of the presentation of the application papers and of the refusal must be specified in a statement of facts by the person who presented the inventor with the application papers and/or to whom the refusal was made. Statements by a party not present when an oral refusal is made will not be accepted.

Proof that a bona fide attempt was made to present a copy of the application papers (specification, including claims, drawings, and oath or declaration) to the non-signing inventor for signature, but the inventor refused to accept delivery of the papers or expressly stated that the application papers should not be sent, may be sufficient. When there is an express oral refusal, that fact along with the time and place of the refusal must be stated in the statement of facts. When there is an express written refusal, a copy of the document evidencing that refusal must be made part of the statement of facts. The document may be redacted to remove material not related to the inventor's reasons for refusal.

When it is concluded by the 37 CFR 1.47 applicant that a non-signing inventor's conduct constitutes a refusal, all facts upon which that conclusion is based should be stated in the statement of facts in support of the petition or directly in the petition. If there is documentary evidence to support facts alleged in the petition or in any statement of facts, such evidence should be submitted. Whenever a non-signing inventor gives a reason for refusing to sign the application oath or declaration, that reason should be stated in the petition.

It cannot be concluded that the non-signing inventor has refused to sign the oath or declaration for the instant petition because it has not been established that the non-signing inventor received a complete copy of the application papers.

Any renewed petition should be accompanied by evidence to establish that each non-signing inventor was sent a complete copy of the application papers (specification, claims, drawings, and oath or declaration) and thereafter refused to execute the declaration. Petitioners may wish to provide the Office copies of letters sent to each inventor indicating the enclosure of the application papers (specification, claims, drawings, and oath or declaration). If after the inventor receives the application papers and requests to execute the oath or declaration are refused, these facts should be set forth in a statement of facts signed by the person to whom the refusals were made and detailing with specificity the exact manner of the refusals. If a written refusal has been made, a copy of the written refusal should be included on renewed petition. See, MPEP 409.03(c).

Further correspondence with respect to this matter should be addressed as follows:

By mail:

Mail Stop Petition
Commissioner for Patents
P.O. Box 1450

	Alexandria, VA 22313-1450
By facsimile:	(571) 273-8300
By hand:	U.S. Patent and Trademark Office Customer Service Window Mail Stop Petition Randolph Building 401 Dulany Street Alexandria, VA 22314

Telephone inquiries related to this decision may be directed to the undersigned at (571) 272-3205.

/ALESIA M. BROWN/

Alesia M. Brown
Attorney Advisor
Office of Petitions

Doc Code: PET.GREEN
Document Description: Petition for Green Tech Pilot

PTO/SB/420 (11-10)
Approved for use through 01/31/2011. OMB 0651-0062
U.S. Patent and Trademark Office; U.S. DEPARTMENT OF COMMERCE
Under the Paperwork Reduction Act of 1995, no persons are required to respond to a collection of information unless it displays a valid OMB control number.

PETITION TO MAKE SPECIAL UNDER THE GREEN TECHNOLOGY PILOT PROGRAM

Attorney Docket Number:	15042-80866	Application Number (if known):	13/180,892	Filing date: July 12, 2011

First Named Inventor: Yu-Chun Peng

Title: THIN-FILM SOLAR CELL MODULE AND MANUFACTURING METHOD THEREOF

APPLICANT HEREBY REQUESTS TO PARTICIPATE IN THE GREEN TECHNOLOGY PILOT PROGRAM FOR THE ABOVE-IDENTIFIED APPLICATION. See Instruction Sheet on page 2.

This petition must be timely filed electronically using the USPTO electronic filing system, EFS-Web.

1. By filing this petition:

   Applicant is requesting early publication: Applicant hereby requests early publication under 37 CFR 1.219 and the publication fee set forth in 37 CFR 1.18(d) accompanies this request.

2. By filing this petition: applicant is agreeing to make an election without traverse in a telephonic interview and elect an invention that meets the eligibility requirements for the Green Technology Pilot Program, if the Office determines that the claims are not obviously directed to a single invention. See Instruction Sheet.

3. This request is accompanied by statements of special status for the eligibility requirement.

4. The application contains no more than three (3) independent claims and twenty (20) total claims.

5. The application does not contain any multiple dependent claims.

6. Other attachments: STATEMENT OF SPECIAL STATUS FOR THE ELIGIBILITY REQUIREMENT

Signature	/Tim Tingkang Xia/	Date	July 12, 2011
Name (Print/Typed)	Tim Tingkang Xia	Registration Number	45,242

***Note**: Signatures of all the inventors or assignees of record of the entire interest or their representative(s) are required in accordance with 37 CFR 1.33 and 11.18. Please see 37 CFR 1.4(d) for the form of the signature. If necessary, submit multiple forms if more than one signature, see below*.*

☐ *Total of 1 forms are submitted.

IN THE UNITED STATES PATENT AND TRADEMARK OFFICE

Applicant:	Yu-Chun Peng et al.	Examiner:	Unassigned
Serial No.:	13/180,892	Group Art Unit:	Unassigned
Filed:	July 12, 2010	Docket:	15042-80866
Title:	THIN-FILM SOLAR CELL MODULE AND MANUFACTURING METHOD THEREOF		

STATEMENT OF SPECIAL STATUS FOR THE ELIGIBILITY REQUIREMENT

Mail Stop: Petition
Commissioner of Patents
P.O. Box 1450
Alexandria, Virginia 22313-1450

July 12, 2011

CUSTOMER NO. 24728

Dear Sir/Madam:

This Statement of Special Status for the Eligibility Requirement is filed pursuant to the requirements listed in PTO/SB/420, filed herewith, and pursuant to the requirements of 74 Fed. Reg. 64,666 (Dec. 8, 2009), as amended by 75 Fed. Reg. 28,554 (May 21, 2010), and 75 Fed. Reg. 69,049 (November 10, 2010).

A basis for the special status is that aspects of the invention relate to ***thin film solar cells*** that ***materially contribute to the discovery or development of renewable energy resources***. Applicant respectfully submits that it is clear on the above-referenced application's face that the claimed invention materially contributes to ***the discovery or development of renewable energy resources***, so no statement is required explaining how the materiality standard is met.

The above-referenced application is a non-reissue, non-provisional utility application filed July 12, 2010 under 35 U.S.C. § 111(a). The application contains no more than three (3) independent claims and twenty (20) total claims. The application does not contain any multiple dependent claims. Further, applicant respectfully submits that the claims of the application are directed to a single invention of a solar cell and manufacturing method thereof. However, if the USPTO determines that the claims are directed to multiple inventions (e.g., in a restriction

requirement), applicant agrees to make an election without traverse in a telephonic interview, and elect an invention that meets the eligibility requirements.

A first Office action (including an Office action containing only a restriction requirement) has not yet appeared in the Patent Application Information Retrieval (PAIR) system.

A request for early publication of the present application in compliance with 37 CFR 1.219 and the publication fee set forth in 37 CFR 1.18(d) are concurrently accompanied herewith this petition.

It is believed that no fee is due. However, the Commissioner is hereby authorized to charge any petition fee under 37 CFR 1.102, and any deficiency of fees which may be required, or to credit of any overpayments to Deposit Account No. 50-3537.

The Applicant respectfully requests that a favorable decision on this Petition to Make Special Under the Green Technology Pilot Program be granted and the application be accorded special status under the Green Technology Pilot Program.

Respectfully submitted,

MORRIS, MANNING & MARTIN, LLP

July 12, 2011

Tim Tingkang Xia
Attorney for Applicant on the Record
Reg. No. 45,242

MORRIS, MANNING & MARTIN, LLP
1600 Atlanta Financial Center
3343 Peachtree Road, N.E.
Atlanta, Georgia 30326-1044
Phone: 404-233-7000
Direct: 404-495-3678
Customer No. 24728

UNITED STATES PATENT AND TRADEMARK OFFICE

UNITED STATES DEPARTMENT OF COMMERCE
United States Patent and Trademark Office
Address: COMMISSIONER FOR PATENTS
P.O. Box 1450
Alexandria, Virginia 22313-1450
www.uspto.gov

APPLICATION NO.	FILING DATE	FIRST NAMED INVENTOR	ATTORNEY DOCKET NO.	CONFIRMATION NO.
13/180,892	07/12/2011	Yu-Chun Peng	15042-80866	3302

24728 7590 08/22/2011

MORRIS MANNING MARTIN LLP
3343 PEACHTREE ROAD, NE
1600 ATLANTA FINANCIAL CENTER
ATLANTA, GA 30326

EXAMINER	
ART UNIT	PAPER NUMBER
1725	

NOTIFICATION DATE	DELIVERY MODE
08/22/2011	ELECTRONIC

Please find below and/or attached an Office communication concerning this application or proceeding.

The time period for reply, if any, is set in the attached communication.

Notice of the Office communication was sent electronically on above-indicated "Notification Date" to the following e-mail address(es):

ipdocket@mmmlaw.com
ppz@mmmlaw.com
jlsmith@mmmlaw.com

UNITED STATES PATENT AND TRADEMARK OFFICE

Commissioner for Patents
United States Patent and Trademark Office
P.O. Box 1450
Alexandria, VA 22313-1450
www.uspto.gov

MORRIS MANNING MARTIN LLP
3343 PEACHTREE ROAD, NE
1600 ATLANTA FINANCIAL CENTER
ATLANTA GA 30326

AUG 22 2011

In re Application of :
Yu-Chun Peng et al. :
Application No. 13/180,892 :
Filed: July 12, 2011 :
Attorney Docket No. 15042-80866 :

DECISION ON PETITION
TO MAKE SPECIAL UNDER
THE GREEN TECHNOLOGY
PILOT PROGRAM

This is a decision on the petition under 37 CFR 1.102, filed July 12, 2011, to make the above-identified application special under the pilot program for applications pertaining to Green Technologies as set forth in 74 Federal Register Notice 64666 (December 8, 2009) and amended by 75 Federal Register Notice 28554 (May 21, 2010) and 75 Federal Register Notice 69049 (November 10, 2010).

The petition is **GRANTED**.

A grantable petition to make an application special under 37 CFR 1.102 and the pilot program as set forth in 74 FR 64666 must be directed to a nonprovisional application filed under 35 USC 111(a) or be a national stage entry under 35 USC 371, exclusive of any reissue applications.

In order to qualify for special status, the following requirements must be met. 1) The application must have no more than 3 independent claims and no more than 20 total claims. 2) The application must not contain any multiple dependent claims. 3) The petition must state the basis for seeking special status, i.e., the claimed invention either: A) materially enhances the quality of the environment or B) materially contributes to: i) the discovery or development of renewable energy resources, ii) the more efficient utilization and conservation of energy resources, or iii) greenhouse gas emission reduction. 4) If the disclosure is not clear on its face that the claimed invention materially contributes under category (A) or (B), the petition must be accompanied by a statement by the applicant, assignee, or an attorney/agent registered to practice before the Office explaining how the materiality standard is met. 5) A statement that applicant will agree to make an election without traverse in a telephonic interview if a restriction requirement is made by the examiner. 6) The petition to make special must be filed electronically. 7) The petition must be filed at least one day prior to the date that a first Office Action appears in the Patent Application Information Retrieval (PAIR) system. 8) The petition must be accompanied by a request for early publication in compliance with 37 CFR 1.219 and include the publication fee as set forth in 37 CFR 1.18(d).

The requirement for a fee for consideration of the petition to make special for applications pertaining to Green Technologies has been waived.

The instant petition complies with items 1 – 8 above. Accordingly, the above-identified application has been accorded "special" status.

Telephone inquires concerning this decision should be directed to Blaine Copenheaver at 571-272-1156.

The application is being forwarded to the examiner for action on the merits commensurate with this decision.

/Blaine Copenheaver/

Blaine Copenheaver
Quality Assurance Specialist
Technology Center 1700

UNITED STATES PATENT AND TRADEMARK OFFICE

Commissioner for Patents
United States Patent and Trademark Office
P.O. Box 1450
Alexandria, VA 22313-1450
www.uspto.gov

MAILED

JAN 19 2012

OFFICE OF PETITIONS

DOBRUSIN & THENNISCH PC
29 W LAWRENCE ST
SUITE 210
PONTIAC MI 48342

In re Application of	:	
DAVIS et al.	:	DECISION NOTING JOINDER OF
Application No. 13/180,894	:	INVENTOR AND PETITION
Filed: 07/12/2011	:	UNDER 37 CFR 1.47(a) AS MOOT
Attorney Docket No 1523-014US1	:	

This is in response to the petition under 37 CFR 1.47(a), filed Monday, November 28, 2011,[1] and supplemented on January 11, 2012.

Applicants submitted a declaration executed by both inventors on January 11, 2011, prior to a decision on the petition under 37 CFR 1.47(a).

In view of the joinder of the inventors, further consideration under 37 CFR 1.47(a) is not necessary. Accordingly, the petition is dismissed as involving a moot issue. This application does not have any Rule 1.47(a) status and no such status should appear on the file wrapper. This application does not need to be returned to the Office of Petitions for further consideration under 37 CFR 1.47(a).

As the issue is moot, the Office has not charged the $200.00 petition fee. Additionally, the $1,980.00 extension of time fee and the duplicate payment of the $130.00 surcharge submitted on January 11, 2012, are unnecessary and will be refunded to the Deposit Account.

This matter is being referred to Technology Center Art Unit 3637 for examination in due course.

Telephone inquiries should be directed to the undersigned at (571) 272-3211.

Christina Tartera Donnell

Christina Tartera Donnell
Senior Petitions Attorney
Office of Petitions

[1] The petition is filed timely because applicants obtained an extension of time for response within the second month and paid the appropriate fee on November 28, 2011.

UNITED STATES PATENT AND TRADEMARK OFFICE

UNITED STATES DEPARTMENT OF COMMERCE
United States Patent and Trademark Office
Address: COMMISSIONER FOR PATENTS
P.O. Box 1450
Alexandria, Virginia 22313-1450
www.uspto.gov

APPLICATION NO.	FILING DATE	FIRST NAMED INVENTOR	ATTORNEY DOCKET NO.	CONFIRMATION NO.
13/180,982	07/12/2011	Roxanne Betesh	1958.002	3465

4617 7590 08/04/2011

LEVISOHN, BERGER , LLP
11 BROADWAY , Suite 615
NEW YORK, NY 10004

EXAMINER	
TRETTEL, MICHAEL	
ART UNIT	**PAPER NUMBER**
3673	

NOTIFICATION DATE	DELIVERY MODE
08/04/2011	ELECTRONIC

Please find below and/or attached an Office communication concerning this application or proceeding.

The time period for reply, if any, is set in the attached communication.

Notice of the Office communication was sent electronically on above-indicated "Notification Date" to the following e-mail address(es):

PBERGER@LLBL.COM
trotberg@llbl.com
wleeruggiera@llbl.com

UNITED STATES PATENT AND TRADEMARK OFFICE

Commissioner for Patents
United States Patent and Trademark Office
P.O. Box 1450
Alexandria, VA 22313-1450
www.uspto.gov

AUG - 8 2011

Levisohn, Berger, LLP
11 Broadway, Suite 515
New York, NY 10004

In re application of
Roxanne Betesh et al.
Application No. 13/180,982
Filed: July 12, 2011
For: HEADBOARD OF EASILY ATTACHABLE MODULAR HEADBOARD CUSHIONS

: **DECISION ON PETITION**
: **TO MAKE SPECIAL FOR**
: **NEW APPLICATION**
: **UNDER 37 CFR 1.102**

This is a decision on the petition filed on July 12, 2011 to make the above-identified application special for accelerated examination procedure under 37 C.F.R. § 1.102(d).

The petition to make the application special is **DISMISSED**.

REGULATION AND PRACTICE

A grantable petition to make special under 37 C.F.R. § 1.102(d) and pursuant to the "Change to Practice for Petitions in Patent Applications to Make Special and for Accelerated Examination" published in the Federal Register on June 26, 2006 (71 Fed. Reg. 36323), must satisfy the following conditions:

I. Conditions Regarding the Application:

1. the application must be a non-reissue utility or design application filed under 37 CFR 1.111(a);

2. the application, the petition and the required fees must be filed electronically using the USPTO's electronic filing system (EFS), or EFS-web; if not filed electronically, a statement asserting that EFS and EFS-web were not available during the normal business hours.

3. at the time of filing, the application must be complete under 37 CFR 1.51 and in condition for examination;

4. the application must contain three or fewer independent claims and twenty or fewer total claims and the claims must be directed to a single invention.

II. Conditions Regarding the Petition:

The petition must:

1. be filed with the application;

2. include a statement that applicant agrees not to separately argue the patentability of any independent claim during any appeal in the application;

3. include a statement that applicant agrees to make an election without traverse in a telephone interview.

4. include a statement that applicant agrees to conduct such an interview when requested by the examiner.

5. include a statement, made based on a good faith belief, that a preexamination search in compliance with the following requirements, was conducted, including an identification of the field of search by United States class and subclass, where applicable, and for database searches, the search logic or chemical structure or sequence used as a query, the name of the file(s) searched and the database service, and the date of the search.

The preexamination search must:

5.1 involve U.S. patents and patent application publications, foreign patent documents, and non-patent literature, unless the applicant can justify with reasonable certainty that no references more pertinent than those already identified are likely to be found in the eliminated sources and includes such a justification with this statement;

5.2. be directed to the claimed invention and encompass all of the features of the claims, giving the claims the broadest reasonable expectation;

5.3. encompass the disclosed features that may be claimed.

6. must provide in support of the petition an accelerated examination support document.

An accelerated examination support document must include:

6.1. an information disclosure statement (IDS) in compliance with 37 CFR 1.98 citing each reference deemed most closely related to the subject matter of each of the claims;

6.2. an identification of all the limitations in the claims that are disclosed by the reference specifying where the limitation is disclosed in the cited reference;

6.3. a detailed explanation of how each of the claims are patentable over the references cited with particularity required by 37 CFR 1.111(b) and (c);

6.4. a concise statement of the utility of the invention as defined in each of the independent claims (unless the application is a design application);

6.5. a showing of where each limitation of the claims finds support under 35 USC 112, first paragraph, in the written description of the specification. If applicable, the showing must also identify: (1) each means- (or step) plus-function claim element that invokes consideration under 35 UDC 112, sixth paragraph; and (2) the structure, material, or acts in the specification that corresponds to each means- (or step) plus-function claim element that invokes consideration under 35 UDC 112, sixth paragraph; if the application claims the benefit of one or more applications under title 35, United States Code, the showing must also include where each limitation of the claims finds support under 35 USC 112, first paragraph, in each such application in which such supports exists;

6.6. an identification of any cited references that may be disqualified under 35 USC 103(c).

REVIEW OF FACTS

The petition in this case fails to comply with conditions II.5.2 and II.6.3, above.

As to condition II.5.2, the petition lacks an indication of a preexamination search that encompasses all of the features of the claims. With respect to the classification search, in addition to the areas searched, the search needs to include at least a search of 52/36.4 and 248/345.1.

Also, because it is necessary to look for every limitation claimed, the indication in the Support Document that limitations (or partial limitations) such as the limitations of claims 3-4 and 7-14, for example, are not found in any of the cited references exposes evidence of the search not encompassing the claimed invention. At least the above noted claim limitations seem to contain elements that the examiner assigned this case believes are quite common and it strains credulity to assert that nowhere in the prior art are located these additional claimed limitations. While a reference containing a specific limitation of any one claim may not result in a rejection of the claim, not finding the structure at all calls into question the sufficiency of the search. It appears that the search may have been completed on the concept of the disclosed invention rather than the "claimed invention" as is required.

Applicant's statement that there are no disclosed features that are unclaimed at this time (beyond applicant's single claim) that may be claimed later is noted.

As to condition II.6.3, there is not a satisfactory detailed explanation of claim patentability over each of the references. The explanation needs to specify how each of the claims are patentable over each of the cited references. In the Detailed Explanation of Patentability applicant indicates that claim 4 is patentable for the reasons set forth in claim 3. However, claim 4 appears to be indicated as taught by the Cohen reference. If claim 4 is separately patentable beyond it's dependency it must be explained why. This apparent inconsistency must be cleared up. What specifically is present in each claim deemed to be separately patentable needs to be made clear. Limitations need to be indicated as taught and not separately patentable, patentable distinctions, or not taught but well known structures that are not seen as patentably distinguishing the claim.

The USPTO website has an example of the proper manner of documenting limitations taught by cited art, and the manner of explaining claim patentability over the references, for an Accelerated Examination Support Document at: http://www.uspto.gov/web/patents/accelerated/.

Therefore, the petition fails to meet the required conditions to be accorded special status under the accelerated examination procedure.

DECISION

For the above-stated reasons, the petition is **DISMISSED**. The application will therefore be taken up by the examiner for action in its regular turn.

Petitioner is given a single opportunity to perfect the petition. Any request for reconsideration of this decision must be submitted within 1 (one) month or 30 (thirty) days, whichever is longer, (no extension of time under 37 CFR 1.136(a)) from the date of this decision in order to be considered timely. Any request for reconsideration must address the deficiencies indicated above.

Petitioner is reminded that, upon granting of the special status of the application on request for reconsideration, the application will be processed expeditiously. However, due to the dismissal of the instant petition, examination may not be completed within twelve months of the filing date of the application.

Any inquiry regarding this decision should be directed to Quality Assurance Specialist Steven N. Meyers, at (571) 272-6611.

Steven N. Meyers,
Quality Assurance Specialist
Technology Center 3600

Sm/sm: 8/3/11

UNITED STATES PATENT AND TRADEMARK OFFICE

UNITED STATES DEPARTMENT OF COMMERCE
United States Patent and Trademark Office
Address: COMMISSIONER FOR PATENTS
P.O. Box 1450
Alexandria, Virginia 22313-1450
www.uspto.gov

APPLICATION NO.	FILING DATE	FIRST NAMED INVENTOR	ATTORNEY DOCKET NO.	CONFIRMATION NO.
13/180,982	07/12/2011	Roxanne Betesh	1958.002	3465

4617 7590 09/07/2011

LEVISOHN, BERGER , LLP
11 BROADWAY , Suite 615
NEW YORK, NY 10004

EXAMINER	
TRETTEL, MICHAEL	
ART UNIT	PAPER NUMBER
3673	

NOTIFICATION DATE	DELIVERY MODE
09/07/2011	ELECTRONIC

Please find below and/or attached an Office communication concerning this application or proceeding.

The time period for reply, if any, is set in the attached communication.

Notice of the Office communication was sent electronically on above-indicated "Notification Date" to the following e-mail address(es):

PBERGER@LLBL.COM
trotberg@llbl.com
wleeruggiera@llbl.com

UNITED STATES PATENT AND TRADEMARK OFFICE

Commissioner for Patents
United States Patent and Trademark Office
P.O. Box 1450
Alexandria, VA 22313-1450
www.uspto.gov

SEP - 6 2011

Levisohn, Berger, LLP
11 Broadway, Suite 515
New York, NY 10004

In re application of
Roxanne Betesh et al.
Application No. 13/180,982
Filed: July 12, 2011
For: HEADBOARD OF EASILY ATTACHABLE MODULAR HEADBOARD CUSHIONS

: **DECISION ON PETITION**
: **TO MAKE SPECIAL FOR**
: **NEW APPLICATION**
: **UNDER 37 CFR 1.102**

This is a decision on the renewed petition filed on September 2, 2011, to make the above-identified application special for accelerated examination procedure under 37 C.F.R. § 1.102(d).

The renewed petition to make the application special is **GRANTED**.

The indication in the Supplemental AESD that claims 2-14 "have no independent patentable features if Claim 1 is found to be unpatentable" is noted.

The application is eligible for accelerated examination and the petition complies with the conditions for granting the application special status pursuant to the "Change to Practice for Petitions in Patent Applications to Make Special and for Accelerated Examination" published June 26, 2006, in the Federal Register. (71 Fed. Reg. 36323).

The prosecution of the instant application will be conducted expeditiously according to the following guidelines.

1. The application will be docketed to an examiner and taken up for action within two weeks of the date of this decision.

2. Restriction Practice:
If the examiner determines that the claims are not directed to a single invention, a telephone request to elect one single invention will be made pursuant to MPEP 812.01. As a prerequisite to the grant of this petition, the applicant has agreed to make an oral election, by telephone, without traverse. If the applicant refuses to make an election without traverse, or the examiner cannot reach the applicant

after a reasonable effort, the examiner will treat the first claimed invention (invention defined by claim 1) as having being constructively elected without traverse for examination.

3. Office action:
If it is determined that, after appropriate consultation, there is a potential rejection or any other issue to be addressed, the examiner will telephone the applicant and arrange an interview to discuss and resolve the issue. An Office action, other than a Notice of Allowance and Fee(s) Due (Notice of Allowance), will not be issued unless either: 1) an interview was conducted but did not result in agreed to action that places the application in condition for allowance, or, 2) a determination is made that an interview would be unlikely to result in the application being placed in condition for allowance, and 3) an internal conference has been held to review any rejection of any claim.

4. Time for Reply:
An Office action other than a Notice of Allowance or a final Office action will set a shortened statutory period of one month or thirty days, whichever is longer, for reply with no extension of time available under 37 CFR 1.136(a). Failure to timely file a reply within this non-extendible period for reply will result in the abandonment of the application.

5. Reply by Applicant:
A timely reply to an Office action other than the Notice of Allowance must be submitted electronically via EFS or EFS-web and limited to addressing the rejections, objections and requirement made. Any amendment that attempts to: 1) add claims which would result in more than three pending independent claims or more than twenty pending total claims; 2) present claims not encompassed by the pre-examination search or an updated accelerated examination support document; or 3) present claims that are directed to a non-elected invention or an invention other than that previously claimed and examined in the application, will be treated as not fully responsive and will not be entered.

For any amendment to the claims (including any new claim) that is not encompassed by the accelerated examination support document, applicant must provide an updated accelerated examination support document that encompasses the amended or new claims at the time of filing of the amendment.

To proceed expeditiously with the examination, it is recommended that a reply with amendments made to any claim or with any new claim being added be accompanied by an updated accelerated examination support document or a statement explaining how the amended or new claim is supported by the original accelerated examination support document.

6. Information Disclosure Statement (IDS):
Any IDS filed during prosecution must be submitted electronically via EFS or EFS-web, accompanied by an updated accelerated examination support document, and be in compliance with 37 CFR 1.97 and 1.98.

7. Post-Allowance Processing:
To expedite processing of the allowed application into a patent, the applicant must: 1) pay the required fees within one month of the date of the Notice of Allowance, and 2) not file any post allowance papers not required by the Office. In no event may the issue fee be paid and accepted later than three months from the date of the Notice of Allowance.

8. After-Final and Appeal Procedures:
To expedite prosecution, after receiving the final Office action, applicant must: 1) promptly file a notice of appeal, an appeal brief and appeal fees; and 2) not request a pre-appeal brief conference.

Any amendment, affidavit or other evidence filed after final Office action must comply with applicable rules and the requirements outlined in numbered paragraphs 5 and 6 above.

On appeal, the application will proceed according to normal appeal procedures. After appeal, the application will again be treated special.

9. Proceedings Outside the Normal Examination Process:
If the application becomes involved in a proceeding that is outside the normal examination process (e.g., a secrecy order, national security review, interference proceeding, petitions under 37 CFR 1.181, 182 or 183), the application will be treated special before and after such proceeding.

10. Final Disposition:
The twelve month goal of this accelerated examination procedure ends with a final disposition. The mailing of a final Office action, a Notice of Allowance, the filing of a Notice of Appeal, or the filing of a Request for Continued Examination (RCE) is the final disposition.

If, during prosecution, a paper is not filed electronically using EFS-web, a reply is filed but is not fully responsive, the application is involved in an appeal, or a proceeding outside normal examination process, the application will still be examined expeditiously, however, the final disposition may occur more than twelve months from the filing of the application.

Any inquiry regarding this decision should be directed to Quality Assurance Specialist Steven N. Meyers, at (571) 272-6611.

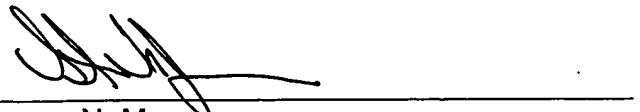

Steven N. Meyers,
Quality Assurance Specialist
Technology Center 3600

Sm/sm: 9/4/11

Doc code : PET.OP.AGE
Description : Petition to make special based on Age/Health

PTO/SB/130 (07-09)
Approved for use through 07/31/2012. OMB 0651- 0031
U.S. Patent and Trademark Office; U.S. DEPARTMENT OF COMMERCE
Under the Paperwork Reduction Act of 1995, no persons are required to respond to a collection of information unless it contains a valid OMB control number

PETITION TO MAKE SPECIAL BASED ON AGE FOR ADVANCEMENT OF EXAMINATION UNDER 37 CFR 1.102(c)(1)

Application Information

Application Number	13/181,048	Confirmation Number	3601	Filing Date	2011-07-12
Attorney Docket Number (optional)	30349.03	Art Unit		Examiner	
First Named Inventor	CHARLES G. TATE				
Title of Invention	METHOD OF AUCTIONING LICENSE PLATES TO GENERATE REVENUE				

Attention: Office of Petitions

An application may be made special for advancement of examination upon filing of a petition showing that the applicant is 65 years of age, or more. No fee is required with such a petition. See 37 CFR 1.102(c)(1) and MPEP 708.02 (IV).

APPLICANT HEREBY PETITIONS TO MAKE SPECIAL FOR ADVANCEMENT OF EXAMINATION IN THIS APPLICATION UNDER 37 CFR 1.102(c)(1) and MPEP 708.02 (IV) ON THE BASIS OF THE APPLICANT'S AGE.

A grantable petition requires one of the following items:
(1) Statement by one named inventor in the application that he/she is 65 years of age, or more; or
(2) Certification by a registered attorney/agent having evidence such as a birth certificate, passport, driver's license, etc. showing one named inventor in the application is 65 years of age, or more.

Name of Inventor who is 65 years of age, or older

Given Name	Middle Name	Family Name	Suffix
CHARLES	G.	TATE	

A signature of the applicant or representative is required in accordance with 37 CFR 1.33 and 10.18. Please see 37 CFR 1.4(d) for the format of the signature.

Select (1) or (2) :

○ (1) I am an inventor in this application and I am 65 years of age, or more.

● (2) I am an attorney or agent registered to practice before the Patent and Trademark Office, and I certify that I am in possession of evidence, and will retain such in the application file record, showing that the inventor listed above is 65 years of age, or more.

Signature	/Richard J, Apley/	Date (YYYY-MM-DD)	2011-07-12
Name	RICHARD J. APLEY	Registration Number	51316

PTO/SB/130 (07-09)
Approved for use through 07/31/2012. OMB 0651- 0031
U.S. Patent and Trademark Office; U.S. DEPARTMENT OF COMMERCE
Under the Paperwork Reduction Act of 1995, no persons are required to respond to a collection of information unless it contains a valid OMB control number

Privacy Act Statement

The Privacy Act of 1974 (P.L. 93-579) requires that you be given certain information in connection with your submission of the attached form related to a patent application or patent. Accordingly, pursuant to the requirements of the Act, please be advised that: (1) the general authority for the collection of this information is 35 U.S.C. 2(b)(2); (2) furnishing of the information solicited is voluntary; and (3) the principal purpose for which the information is used by the U.S. Patent and Trademark Office is to process and/or examine your submission related to a patent application or patent. If you do not furnish the requested information, the U.S. Patent and Trademark Office may not be able to process and/or examine your submission, which may result in termination of proceedings or abandonment of the application or expiration of the patent.

The information provided by you in this form will be subject to the following routine uses:

1. The information on this form will be treated confidentially to the extent allowed under the Freedom of Information Act (5 U.S.C. 552) and the Privacy Act (5 U.S.C. 552a). Records from this system of records may be disclosed to the Department of Justice to determine whether the Fr eedom of Information Act requires disclosure of these records.

2. A record from this system of records may be disclosed, as a routine use, in the course of presenting evidence to a court, magistrate, or administrative tribunal, including disclosures to opposing counsel in the course of settlement negotiations.

3. A record in this system of records may be disclosed, as a routine use, to a Member of Congress submitting a request involving an individual, to whom the record pertains, when the individual has requested assistance from the Member with respect to the subject matter of the record.

4. A record in this system of records may be disclosed, as a routine use, to a contractor of the Agency having need for the information in order to perform a contract. Recipients of information shall be required to comply with the requirements of the Privacy Act of 1974, as amended, pursuant to 5 U.S.C. 552a(m).

5. A record related to an International Application filed under the Patent Cooperation Treaty in this system of records may be disclosed, as a routine use, to the International Bureau of the World Intellectual Property Organization, pursuant to the Patent Cooperation Treaty.

6. A record in this system of records may be disclosed, as a routine use, to another federal agency for purposes of National Security review (35 U.S.C. 181) and for review pursuant to the Atomic Energy Act (42 U.S.C. 218(c)).

7. A record from this system of records may be disclosed, as a routine use, to the Administrator, General Services, or his/her designee, during an inspection of records conducted by GSA as part of that agency's responsibility to recommend improvements in records management practices and programs, under authority of 44 U.S.C. 2904 and 2906. Such disclosure shall be made in accordance with the GSA regulations governing inspection of records for this purpose, and any other relevant (i.e., GSA or Commerce) directive. Such disclosure shall not be used to make determinations about indivi duals.

8. A record from this system of records may be disclosed, as a routine use, to the public after either publication of the application pursuant to 35 U.S.C. 122(b) or issuance of a patent pursuant to 35 U.S.C. 151. Further, a record may be disclosed, subject to the limitations of 37 CFR 1.14, as a routine use, to the public if the record was filed in an application which became abandoned or in which the proceedings were terminated and which application is referenced by either a published application, an application open to public inspections or an issued patent.

9. A record from this system of records may be disclosed, as a routine use, to a Federal, State, or local law enforcement agency, if the USPTO becomes aware of a violation or potential violation of law or regulation.

UNITED STATES PATENT AND TRADEMARK OFFICE

Commissioner for Patents
United States Patent and Trademark Office
P.O. Box 1450
Alexandria, VA 22313-1450
www.uspto.gov

In re Application of
CHARLES G. TATE

Application No. 13181048

Filed:

Attorney Docket No. 30349.03

:DECISION ON PETITION TO MAKE SPECIAL
:UNDER 37 CFR 1.102(c)(1)

This is a decision on the electronic petition under 37 CFR 1.102 (c)(1), filed 12-JUL-2011 to make the above-identified application special based on applicant's age as set forth in MPEP § 708.02, Section IV.

The petition is **GRANTED**.

A grantable petition to make an application special under 37 CFR 1.102(c)(1), MPEP § 708.02, Section IV: Applicant's Age must include a statement by applicant or a registered practitioner having evidence that applicant is at least 65 years of age. No fee is required.

Accordingly, the above-identified application has been accorded "special" status and will be taken up for action by the examiner upon the completion of all pre-examination processing.

Telephone inquiries concerning this electronic decision should be directed to the Electronic Business Center at 866-217-9197.

All other inquiries concerning either the examination or status of the application should be directed to the Technology Center.

Doc Code: PET.GREEN
Document Description: Petition for Green Tech Pilot

PTO/SB/420 (05-10)
Approved for use through 05/31/2010. OMB 0651-0062
U.S. Patent and Trademark Office; U. S. DEPARTMENT OF COMMERCE
Under the Paperwork Reduction Act of 1995, no persons are required to respond to a collection of information unless it displays a valid OMB control number.

PETITION TO MAKE SPECIAL UNDER THE GREEN TECHNOLOGY PILOT PROGRAM

Attorney Docket Number: 1630-0943PUS1	Application Number (if known):	Filing date: July 12, 2011
First Named Inventor: Jinhyung AHN		
Title: THIN FILM SOLAR CELL AND METHOD OF MANUFACTURING THE SAME		

APPLICANT HEREBY REQUESTS TO PARTICIPATE IN THE GREEN TECHNOLOGY PILOT PROGRAM FOR THE ABOVE-IDENTIFIED APPLICATION. See Instruction Sheet on page 2.

This petition must be timely filed electronically using the USPTO electronic filing system, EFS-Web.

1. By filing this petition:

   Applicant is requesting early publication: Applicant hereby requests early publication under 37 CFR 1.219 and the publication fee set forth in 37 CFR 1.18(d) accompanies this request.

2. By filing this petition: applicant is agreeing to make an election without traverse in a telephonic interview and elect an invention that meets the eligibility requirements set forth in the notice titled "Pilot Program for Green Technologies Including Greenhouse Gas Reduction," as modified by the notice titled "Elimination of Classification Requirement in the Green Technology Pilot Program," each of which was published in the Federal Register, if the Office determines that the claims are not obviously directed to a single invention.

3. This request is accompanied by statements of special status for the eligibility requirement.

4. The application contains no more than three (3) independent claims and twenty (20) total claims.

5. The application does not contain any multiple dependent claims.

6. Other attachments: _____

Signature	Date July 12, 2011
Name (Print/Typed) Esther H. Chong	Registration Number 40953

Note: *Signatures of all the inventors or assignees of record of the entire interest or their representative(s) are required in accordance with 37 CFR 1.33 and 11.18. Please see 37 CFR 1.4(d) for the form of the signature. If necessary, submit multiple forms for more than one signature, see below*.*

☐ *Total of _____ forms are submitted.

The information is required to obtain or retain a benefit by the public which is to file (and by the USPTO to process) an application. Confidentiality is governed by 35 U.S.C. 122 and 37 CFR 1.11 and 1.14. This collection is estimated to take 12 hours to complete, including gathering, preparing, and submitting the completed application form to the USPTO. Time will vary depending upon the individual case. Any comments on the amount of time you require to complete this form and/or suggestions for reducing this burden, should be sent to the Chief Information Officer, U.S. Patent and Trademark Office, U.S. Department of Commerce, P.O. Box 1450, Alexandria, VA 22313-1450. DO NOT SEND FEES OR COMPLETED FORMS TO THIS ADDRESS. **SEND TO: Commissioner for Patents, P.O. Box 1450, Alexandria, VA 22313-1450.**

If you need assistance in completing the form, call 1-800-PTO-9199 and select option 2.

Docket No.: 1630-0943PUS1
(Patent)

IN THE UNITED STATES PATENT AND TRADEMARK OFFICE

Patent Application of:	Jinhyung AHN et al.		
Application No.:	NEW	Confirmation No.:	Not Yet Assigned
Filed:	July 12, 2011	Art Unit:	Not Yet Assigned
For:	THIN FILM SOLAR CELL AND METHOD OF MANUFACTURING THE SAME	Examiner:	Not Yet Assigned

STATEMENT OF SPECIAL STATUS FOR THE ELIGIBILITY REQUIREMENT UNDER THE GREEN TECHNOLOGY PILOT PROGRAM

Commissioner for Patents
P.O. Box 1450
Alexandria, VA 22313-1450

Sir:

In support of the Petition to Make Special Under the Green Technology Pilot Program, it is respectfully submitted that the basis for the requested special status is that the invention claimed in the above-identified patent application materially contributes to the development of renewable energy sources and/or green house gas emission reduction. Specifically, the claimed invention relates to a solar cell.

Additionally, by filing this petition, the applicant agrees to make an election without traverse in a telephone interview and elect an invention that meets the eligibility requirements set for in the notice titled "Pilot Program for Green Technologies Including Greenhouse Gas Reduction," as modified by the notice titled "Elimination of Classification Requirement in the Green Technology Pilot Program," each of which was published in the Federal Register, if the Office determines that the claims are not obviously directed to a single invention.

It is also submitted that this application meets the eligibility requirements to participate in the Green Technology Pilot Program, as listed in the attached Petition to Make Special Under the Green Technology Pilot Program.

Accordingly, it is respectfully requested that the Petition be granted.

Should there be any outstanding matters that need to be resolved in the present application, the Examiner is respectfully requested to contact Seth S. Kim, Reg. No. 54,577, at the telephone number of the undersigned below to conduct an interview in an effort to expedite prosecution in connection with the present application.

If necessary, the Director is hereby authorized in this, concurrent, and future replies to charge any fees required during the pendency of the above-identified application or credit any overpayment to Deposit Account No. 02-2448.

Dated: July 12, 2011

Respectfully submitted,

By 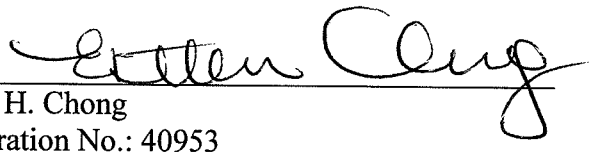

Esther H. Chong
Registration No.: 40953
BIRCH, STEWART, KOLASCH & BIRCH, LLP
8110 Gatehouse Road, Suite 100 East
P.O. Box 747
Falls Church, VA 22040-0747
703-205-8000

UNITED STATES PATENT AND TRADEMARK OFFICE

UNITED STATES DEPARTMENT OF COMMERCE
United States Patent and Trademark Office
Address: COMMISSIONER FOR PATENTS
P.O. Box 1450
Alexandria, Virginia 22313-1450
www.uspto.gov

APPLICATION NO.	FILING DATE	FIRST NAMED INVENTOR	ATTORNEY DOCKET NO.	CONFIRMATION NO.
13/181,229	07/12/2011	Jinhyung AHN	1630-0943PUS1	3955

2292 7590 08/22/2011
BIRCH STEWART KOLASCH & BIRCH
PO BOX 747
FALLS CHURCH, VA 22040-0747

EXAMINER	
ART UNIT	PAPER NUMBER
1725	

NOTIFICATION DATE	DELIVERY MODE
08/22/2011	ELECTRONIC

Please find below and/or attached an Office communication concerning this application or proceeding.

The time period for reply, if any, is set in the attached communication.

Notice of the Office communication was sent electronically on above-indicated "Notification Date" to the following e-mail address(es):

mailroom@bskb.com

UNITED STATES PATENT AND TRADEMARK OFFICE

Commissioner for Patents
United States Patent and Trademark Office
P.O. Box 1450
Alexandria, VA 22313-1450
www.uspto.gov

BIRCH STEWART KOLASCH & BIRCH
PO BOX 747
FALLS CHURCH VA 22040-0747

AUG 22 2011

In re Application of :
Jinhyung Ahn et al. :
Application No. 13/181,229 :
Filed: July 12, 2011 :
Attorney Docket No. 1630-0943PUS1 :

DECISION ON PETITION
TO MAKE SPECIAL UNDER
THE GREEN TECHNOLOGY
PILOT PROGRAM

This is a decision on the petition under 37 CFR 1.102, filed July 12, 2011, to make the above-identified application special under the pilot program for applications pertaining to Green Technologies as set forth in 74 Federal Register Notice 64666 (December 8, 2009) and amended by 75 Federal Register Notice 28554 (May 21, 2010) and 75 Federal Register Notice 69049 (November 10, 2010).

The petition is **GRANTED**.

A grantable petition to make an application special under 37 CFR 1.102 and the pilot program as set forth in 74 FR 64666 must be directed to a nonprovisional application filed under 35 USC 111(a) or be a national stage entry under 35 USC 371, exclusive of any reissue applications.

In order to qualify for special status, the following requirements must be met. 1) The application must have no more than 3 independent claims and no more than 20 total claims. 2) The application must not contain any multiple dependent claims. 3) The petition must state the basis for seeking special status, i.e., the claimed invention either: A) materially enhances the quality of the environment or B) materially contributes to: i) the discovery or development of renewable energy resources, ii) the more efficient utilization and conservation of energy resources, or iii) greenhouse gas emission reduction. 4) If the disclosure is not clear on its face that the claimed invention materially contributes under category (A) or (B), the petition must be accompanied by a statement by the applicant, assignee, or an attorney/agent registered to practice before the Office explaining how the materiality standard is met. 5) A statement that applicant will agree to make an election without traverse in a telephonic interview if a restriction requirement is made by the examiner. 6) The petition to make special must be filed electronically. 7) The petition must be filed at least one day prior to the date that a first Office Action appears in the Patent Application Information Retrieval (PAIR) system. 8) The petition must be accompanied by a request for early publication in compliance with 37 CFR 1.219 and include the publication fee as set forth in 37 CFR 1.18(d).

The requirement for a fee for consideration of the petition to make special for applications pertaining to Green Technologies has been waived.

The instant petition complies with items 1 – 8 above. Accordingly, the above-identified application has been accorded "special" status.

Telephone inquires concerning this decision should be directed to Blaine Copenheaver at 571-272-1156.

The application is being forwarded to the examiner for action on the merits commensurate with this decision.

/Blaine Copenheaver/

Blaine Copenheaver
Quality Assurance Specialist
Technology Center 1700

Doc Code: PET.GREEN
Document Description: Petition for Green Tech Pilot

PTO/SB/420 (03-11)

PETITION TO MAKE SPECIAL UNDER THE GREEN TECHNOLOGY PILOT PROGRAM

Attorney Docket Number: ASOK0002	Application Number (if known):	Filing date: July 12, 2011

First Named Inventor: Mingyao XIA

Title: Set-Top-Box Having a Built-In Master Node That Provides an External Interface for Communication and Control in a Power-Line-Based Residential Communication System

APPLICANT HEREBY REQUESTS TO PARTICIPATE IN THE GREEN TECHNOLOGY PILOT PROGRAM FOR THE ABOVE-IDENTIFIED APPLICATION. See Instruction Sheet on page 2.

This petition must be timely filed electronically using the USPTO electronic filing system, EFS-Web.

1. By filing this petition:

   Applicant is requesting early publication: Applicant hereby requests early publication under 37 CFR 1.219 and the publication fee set forth in 37 CFR 1.18(d) accompanies this request.

2. By filing this petition: applicant is agreeing to make an election without traverse in a telephonic interview and elect an invention that meets the eligibility requirements for the Green Technology Pilot Program, if the Office determines that the claims are not obviously directed to a single invention. See Instruction Sheet.

3. This request is accompanied by statements of special status for the eligibility requirement.

4. The application contains no more than three (3) independent claims and twenty (20) total claims.

5. The application does not contain any multiple dependent claims.

6. Other attachments: _____

Signature /MAG/	Date July 12, 2011
Name (Print/Typed) Michael A. Glenn	Registration Number 30176

Note: *Signatures of all the inventors or assignees of record of the entire interest or their representative(s) are required in accordance with 37 CFR 1.33 and 11.18. Please see 37 CFR 1.4(d) for the form of the signature. If necessary, submit multiple forms for more than one signature, see below*.*

■ *Total of 1 forms are submitted.

If you need assistance in completing the form, call 1-800-PTO-9199 and select option 2.

Instruction Sheet for
Petition to Make Special Under the Green Technology Pilot Program

(Not to be Submitted to the USPTO)

The following is a summary of the requirements (for more information see the notices (i) "Pilot Program for Green Technologies Including Greenhouse Gas Reduction," (ii) "Elimination of Classification Requirement in the Green Technology Pilot Program," and (iii) "Expansion and Extension of the Green Technology Pilot Program," available on the USPTO web site at http://www.uspto.gov/patents/init_events/green_tech.jsp):

(1) The application must be a non-reissue, non-provisional utility application filed under 35 U.S.C. 111(a), or an international application that has entered the national stage in compliance with 35 U.S.C. 371, irrespective of the filing date of the application. Reexamination proceedings are excluded from this pilot program.

(2) The application must contain three or fewer independent claims and twenty or fewer total claims. The application must not contain any multiple dependent claims. For an application that contains more than three independent claims or twenty total claims, or multiple dependent claims, applicant must file a preliminary amendment in compliance with 37 CFR 1.121 to cancel the excess claims and/or the multiple dependent claims at the time the petition to make special is filed.

(3) The claims must be directed to a single invention that materially enhances the quality of the environment, or that materially contributes to: (1) the discovery or development of renewable energy resources; (2) the more efficient utilization and conservation of energy resources; or (3) green house gas emission reduction (see the eligibility requirements of sections II and III of the notice (i) cited above). The petition must include a statement that, if the USPTO determines that the claims are directed to multiple inventions (e.g., in a restriction requirement), applicant will agree to make an election without traverse in a telephonic interview, and elect an invention that meets the eligibility requirements in section II or III of the notice (i) cited above.

(4) The petition to make special must be timely filed electronically using the USPTO electronic filing system, EFS-Web, and selecting the document description of "Petition for Green Tech Pilot" on the EFS-Web screen. Applicant should use form PTO/SB/420, which is available as a Portable Document Format (PDF) fillable form in EFS-Web and on the USPTO Web site.

(5) The petition to make special must be filed at least one day prior to the date that a first Office action (which may be an Office action containing only a restriction requirement) appears in the Patent Application Information Retrieval (PAIR) system. Applicant may check the status of the application using PAIR.

(6) The petition to make special must be accompanied by a request for early publication in compliance with 37 CFR 1.219 and the publication fee set forth in 37 CFR 1.18(d).

Privacy Act Statement

The **Privacy Act of 1974 (P.L. 93-579)** requires that you be given certain information in connection with your submission of the attached form related to a patent application or patent. Accordingly, pursuant to the requirements of the Act, please be advised that: (1) the general authority for the collection of this information is 35 U.S.C. 2(b)(2); (2) furnishing of the information solicited is voluntary; and (3) the principal purpose for which the information is used by the U.S. Patent and Trademark Office is to process and/or examine your submission related to a patent application or patent. If you do not furnish the requested information, the U.S. Patent and Trademark Office may not be able to process and/or examine your submission, which may result in termination of proceedings or abandonment of the application or expiration of the patent.

The information provided by you in this form will be subject to the following routine uses:

1. The information on this form will be treated confidentially to the extent allowed under the Freedom of Information Act (5 U.S.C. 552) and the Privacy Act (5 U.S.C 552a). Records from this system of records may be disclosed to the Department of Justice to determine whether disclosure of these records is required by the Freedom of Information Act.
2. A record from this system of records may be disclosed, as a routine use, in the course of presenting evidence to a court, magistrate, or administrative tribunal, including disclosures to opposing counsel in the course of settlement negotiations.
3. A record in this system of records may be disclosed, as a routine use, to a Member of Congress submitting a request involving an individual, to whom the record pertains, when the individual has requested assistance from the Member with respect to the subject matter of the record.
4. A record in this system of records may be disclosed, as a routine use, to a contractor of the Agency having need for the information in order to perform a contract. Recipients of information shall be required to comply with the requirements of the Privacy Act of 1974, as amended, pursuant to 5 U.S.C. 552a(m).
5. A record related to an International Application filed under the Patent Cooperation Treaty in this system of records may be disclosed, as a routine use, to the International Bureau of the World Intellectual Property Organization, pursuant to the Patent Cooperation Treaty.
6. A record in this system of records may be disclosed, as a routine use, to another federal agency for purposes of National Security review (35 U.S.C. 181) and for review pursuant to the Atomic Energy Act (42 U.S.C. 218(c)).
7. A record from this system of records may be disclosed, as a routine use, to the Administrator, General Services, or his/her designee, during an inspection of records conducted by GSA as part of that agency's responsibility to recommend improvements in records management practices and programs, under authority of 44 U.S.C. 2904 and 2906. Such disclosure shall be made in accordance with the GSA regulations governing inspection of records for this purpose, and any other relevant (*i.e.*, GSA or Commerce) directive. Such disclosure shall not be used to make determinations about individuals.
8. A record from this system of records may be disclosed, as a routine use, to the public after either publication of the application pursuant to 35 U.S.C. 122(b) or issuance of a patent pursuant to 35 U.S.C. 151. Further, a record may be disclosed, subject to the limitations of 37 CFR 1.14, as a routine use, to the public if the record was filed in an application which became abandoned or in which the proceedings were terminated and which application is referenced by either a published application, an application open to public inspection or an issued patent.
9. A record from this system of records may be disclosed, as a routine use, to a Federal, State, or local law enforcement agency, if the USPTO becomes aware of a violation or potential violation of law or regulation.

UNITED STATES PATENT AND TRADEMARK OFFICE

UNITED STATES DEPARTMENT OF COMMERCE
United States Patent and Trademark Office
Address: COMMISSIONER FOR PATENTS
P.O. Box 1450
Alexandria, Virginia 22313-1450
www.uspto.gov

APPLICATION NO.	FILING DATE	FIRST NAMED INVENTOR	ATTORNEY DOCKET NO.	CONFIRMATION NO.
13/181,293	07/12/2011	Mingyao XIA	ASOK0002	4091

22862 7590 08/05/2011

GLENN PATENT GROUP
3475 EDISON WAY, SUITE L
MENLO PARK, CA 94025

EXAMINER	
ART UNIT	PAPER NUMBER
2611	

NOTIFICATION DATE	DELIVERY MODE
08/05/2011	ELECTRONIC

Please find below and/or attached an Office communication concerning this application or proceeding.

The time period for reply, if any, is set in the attached communication.

Notice of the Office communication was sent electronically on above-indicated "Notification Date" to the following e-mail address(es):

ptomatters@glenn-law.com
GlennDocketing@cpaglobal.com

UNITED STATES PATENT AND TRADEMARK OFFICE

Commissioner for Patents
United States Patent and Trademark Office
P.O. Box 1450
Alexandria, VA 22313-1450
www.uspto.gov

GLENN PATENT GROUP
3475 EDISON WAY, SUITE L
MENLO PARK CA 94025

In re Application of	:	
XIA et al.	:	DECISION ON PETITION
Application No. 13/181,293	:	TO MAKE SPECIAL UNDER
Filed: June 12, 2011	:	THE GREEN TECHNOLOGY
Attorney Docket No. ASOK0002	:	PILOT PROGRAM

This is a decision on the petition under 37 CFR 1.102, filed on June 12, 2011, to make the above-identified application special under the pilot program for applications pertaining to Green Technologies as set forth 74 Federal Register Notice 64666 (December 8, 2009) and amended by 75 Federal Register Notice 28554 (May 21, 2010) and 75 Federal Register Notice 69049 (November 10, 2010).

The petition is **DISMISSED**.

If reconsideration of this decision is desired, a petition for reconsideration must be filed within ONE (1) MONTH OR THIRTY (30) DAYS from the mail date of this decision, whichever is longer. No extension of this time limit can be granted under 37 CFR 1.136(a) or (b). The petition for reconsideration should include an exhaustive attempt to provide the lacking item(s) noted below, since, after a decision on the petition for reconsideration, no further reconsideration or review of the matter will be undertaken by the Director.

A grantable petition to make an application special under 37 CFR 1.102 and the pilot program as set forth in 74 FR 64666 must be directed to a nonprovisional application filed under 35 USC 111(a) or be a national stage entry under 35 USC 371, exclusive of any reissue applications and be filed prior to the date of the notice, December 8, 2009.

In order to qualify for special status, the following requirements must be met. 1) The application must have no more than 3 independent claims and no more than 20 total claims. 2) The application must not contain any multiple dependent claims. 3) The petition must state the basis for seeking special status, i.e., the claimed invention either: A) materially enhances the quality of the environment or B) materially contributes to: i) the discovery or development of renewable energy resources, ii) the more efficient utilization and conservation of energy resources, or iii) greenhouse gas emission reduction. 4) If the disclosure is not clear on its face that the claimed invention materially contributes under category (A) or (B), the petition must be accompanied by a statement by the applicant, assignee, or an attorney/agent registered to practice before the Office explaining how the materiality standard is met. 5) A statement that applicant will agree to

make an election without traverse in a telephonic interview if a restriction requirement is made by the examiner. 6) The petition to make special must be filed electronically. 7) The petition must be filed at least one day prior to the date that a first Office Action appears in the Patent Application Information Retrieval (PAIR) system. 8) The petition must be accompanied by a request for early publication in compliance with 37 CFR 1.219 and include the publication fee as set forth in 37 CFR 1.18(d).

The requirement for a fee for consideration of the petition to make special for applications pertaining to Green Technologies has been waived.

The petition lacks item 4.

In regard to item 4, applicant's statement pertaining to how the materiality standard is met does not satisfy the requirements for this pilot. The petition alleges that the claimed invention contributes to conservation of energy. The claims are generally directed to a system and method for monitoring and controlling power. The materiality standard does not permit an applicant to speculate as to how a hypothetical end-user might specially apply the invention in a manner that could contribute to more efficient utilization and conservation of energy resources. Monitoring and collecting data do not provide more efficient utilization or conservation of energy resource and at best is considered speculate as to how a hypothetical end-user might specially apply the claimed invention. It would appear that the claimed invention could be used to conserve energy but the materiality standard requires more efficient utilization and conservation of energy resources. It is not readily apparent how the claimed invention provides more efficient utilization of energy resources.

Any reconsideration of this decision should be submitted through the USPTO electronic filing system, EFS-Web, and selecting the document description of "Petition for Green Tech Pilot" on the EFS-Web screen.

Telephone inquiries concerning this decision should be directed to Lee W. Young at 571-272-4549.

The application is being forwarded to the Technology Center Art Unit 2611 for action in its regular turn.

Lee W. Young
Quality Assurance Specialist
Technology Center 2600

IN THE UNITED STATES PATENT AND TRADEMARK OFFICE

First Named Inventor	:	Mingyao Xia
Serial No.	:	13/181,293
Filed	:	July 12, 2011
Art Unit	:	2611
Confirmation Number	:	4091
Examiner	:	*not yet assigned*
Title	:	SET-TOP-BOX HAVING A BUILT-IN MASTER NODE THAT PROVIDES AN EXTERNAL INTERFACE FOR COMMUNICATION AND CONTROL IN A POWER-LINE-BASED RESIDENTIAL COMMUNICATIONS SYSTEM
Attorney Docket No.	:	ASOK0002

September 6, 2011

Commissioner for Patents
PO BOX 1450
Alexandria VA 22313-1450

Request for Reconsideration of Decision on Petition to Make Special Under the Green Technology Pilot Program

Applicant requests reconsideration of the decision made in the Applicants' Statement of Special Status, filed July 12, 2011.

In that Statement, the Applicants requested Special Status in connection with the Green Technology Pilot Program on the basis of the energy conservation afforded by the invention claimed in the subject application.

The Applicants explained that the invention:

> "reduces the carbon footprint of in-home equipment by appropriate use of devices for power monitoring, data collection, and control and communication of said equipment over power lines. Implementation of green technologies requires monitoring and control of the carbon footprint of homes and offices and has created a need to assess the power usage pattern and the magnitude of usage remotely, and to supervise and control the power remotely. It is necessary to monitor and control the power use on a micro level for the consumer, who can exercise the necessary constraints on use if the proper tools are provided. It is also necessary to monitor the usage pattern and collect data on a macro level to develop policies that are beneficial to the overall reduction of the carbon footprint at the home and office level, as well as on a national level. Empowering the individual and the society to exercise the necessary controls by monitoring the power usage is an area where the power line communication and control can be effectively and optimally used."

However, in the Decision, the Office stated that:

> "[m]onitoring and collecting data do not provide more efficient utilization or conservation of energy resource[s] and at best is considered [speculative] as to how a hypothetical end-user might specially apply the claimed invention."

The Applicants disagree that such a speculation is required to appreciate the energy-saving benefit of the Claimed invention. The Applicants believe that the energy-saving benefits of an integrated facility to enable the measurement and control of power usage of appliances within homes from remote sites is sufficiently apparent.

However, to facilitate the granting of the Petition to Make Special, the Applicants file a Preliminary Amendment along with this Request which recites the energy saving features of the invention more clearly in the Claims.

More specifically, the Claims are now more narrowly-tailored to the embodiments of the invention which include remotely monitoring the energy usage of remote appliances ***and remotely controlling the appliances to reduce energy usage***.

As amended, no speculation is required to appreciate the energy reduction benefit recited in the Claims. Accordingly, the Applicants respectfully request that the Petition to Make Special under the Green Technology Pilot Program be granted.

Respectfully submitted,

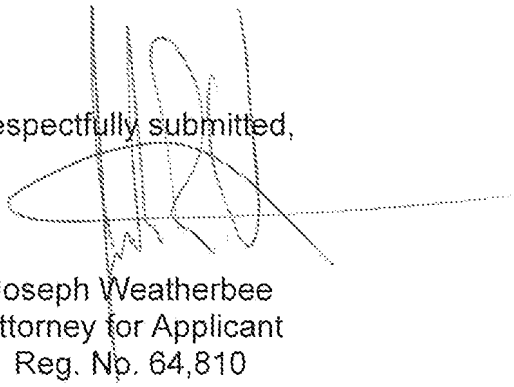

Joseph Weatherbee
Attorney for Applicant
Reg. No. 64,810

Customer No. 22862

UNITED STATES PATENT AND TRADEMARK OFFICE

UNITED STATES DEPARTMENT OF COMMERCE
United States Patent and Trademark Office
Address: COMMISSIONER FOR PATENTS
P.O. Box 1450
Alexandria, Virginia 22313-1450
www.uspto.gov

APPLICATION NO.	FILING DATE	FIRST NAMED INVENTOR	ATTORNEY DOCKET NO.	CONFIRMATION NO.
13/181,293	07/12/2011	Mingyao XIA	ASOK0002	4091

22862 7590 09/29/2011
GLENN PATENT GROUP
3475 EDISON WAY, SUITE L
MENLO PARK, CA 94025

EXAMINER	
KOENIG, ANDREW Y	
ART UNIT	PAPER NUMBER
2423	

NOTIFICATION DATE	DELIVERY MODE
09/29/2011	ELECTRONIC

Please find below and/or attached an Office communication concerning this application or proceeding.

The time period for reply, if any, is set in the attached communication.

Notice of the Office communication was sent electronically on above-indicated "Notification Date" to the following e-mail address(es):

ptomatters@glenn-law.com

UNITED STATES PATENT AND TRADEMARK OFFICE

Commissioner for Patents
United States Patent and Trademark Office
P.O. Box 1450
Alexandria, VA 22313-1450
www.uspto.gov

GLENN PATENT GROUP
3475 EDISON WAY, SUITE L
MENLO PARK CA 94025

9/29/11

In re Application of	:	
Xia et al.	:	DECISION ON PETITION
Application No. 13/181,293	:	TO MAKE SPECIAL UNDER
Filed: 7/12/2011	:	THE GREEN TECHNOLOGY
Attorney Docket No. **ASOK0002**	:	PILOT PROGRAM

This is a decision on the request for reconsideration, filed 9/6/2011, to make the above-identified application special under the pilot program for applications pertaining to Green Technologies as set forth in 74 Federal Register Notice 64666 (December 8, 2009) and amended by 75 Federal Register Notice 28554 (May 21, 2010) and 75 Federal Register Notice 69049 (November 10, 2010).

The petition is **GRANTED**.

A grantable petition to make an application special under 37 CFR 1.102 and the pilot program as set forth in 74 FR 64666 must be directed to a nonprovisional application filed under 35 USC 111(a) or be a national stage entry under 35 USC 371, exclusive of any reissue applications.

In order to qualify for special status, the following requirements must be met. 1) The application must have no more than 3 independent claims and no more than 20 total claims. 2) The application must not contain any multiple dependent claims. 3) The petition must state the basis for seeking special status, i.e., the claimed invention either: A) materially enhances the quality of the environment or B) materially contributes to: i) the discovery or development of renewable energy resources, ii) the more efficient utilization and conservation of energy resources, or iii) greenhouse gas emission reduction. 4) If the disclosure is not clear on its face that the claimed invention materially contributes under category (A) or (B), the petition must be accompanied by a statement by the applicant, assignee, or an attorney/agent registered to practice before the Office explaining how the materiality standard is met. 5) A statement that applicant will agree to make an election without traverse in a telephonic interview if a restriction requirement is made by the examiner. 6) The petition to make special must be filed electronically. 7) The petition must be filed at least one day prior to the date that a first Office Action appears in the Patent Application Information Retrieval (PAIR) system. 8) The petition must be accompanied by a request for early publication in compliance with 37 CFR 1.219 and include the publication fee as set forth in 37 CFR 1.18(d).

The requirement for a fee for consideration of the petition to make special for applications pertaining to Green Technologies has been waived.

The instant petition complies with items 1 – 8 above. Accordingly, the above-identified application has been accorded "special" status.

Telephone inquires concerning this decision should be directed to Tom Dunn at 571-272-1171.

The application is being forwarded to the Technology Center Art Unit 2423 for action on the merits commensurate with this decision.

/Tom Dunn/

Tom Dunn
Quality Assurance Specialist
Technology Center 1700

UNITED STATES PATENT AND TRADEMARK OFFICE

Commissioner for Patents
United States Patent and Trademark Office
P.O. Box 1450
Alexandria, VA 22313-1450
www.uspto.gov

PFIZER INC
10555 SCIENCE CENTER DRIVE
SAN DIEGO CA 92121

MAILED

SEP 02 2011

OFFICE OF PETITIONS

In re Application of	:	
Lu et al.	:	
Application No. 13/181,375	:	DECISION GRANTING STATUS
Filed: July 12, 2011	:	STATUS UNDER 37 CFR 1.47(a)
Attorney Docket No. PC58880B	:	

This is in response to the petition under 37 CFR 1.47(a), filed July 12, 2011.

The petition is **GRANTED**.

Petitioner has shown that the nonsigning inventor, Anthony F. Hadfield, has refused to join in the filing of the above-identified application.

The above-identified application and papers have been reviewed and found in compliance with 37 CFR 1.47(a). This application is hereby accorded Rule 1.47(a) status. As provided in Rule 1.47(c), this Office will forward notice of this application's filing to the nonsigning inventor at the address given in the petition. Notice of the filing of this application will also be published in the Official Gazette.

Telephone inquiries regarding this decision should be directed to the undersigned at (571) 272-3206.

This matter is being referred to the Office of Patent Application Processing for further pre-examination processing.

/Liana Walsh/
Liana Walsh
Petitions Examiner
Office of Petitions

UNITED STATES PATENT AND TRADEMARK OFFICE

Commissioner for Patents
United States Patent and Trademark Office
P.O. Box 1450
Alexandria, VA 22313-1450
www.uspto.gov

ANTHONY F. HADFIELD
555 HIGHLAND STREET
ST. PETERSBURG, FL 33705

MAILED

SEP 02 2011

OFFICE OF PETITIONS

In re Application of	:	
Lu et al.	:	
Application No. 13/181,375	:	ON PETITION
Filed: July 12, 2011	:	
Attorney Docket No. PC58880B	:	

Mr. Hadfield,

You are named as a joint inventor in the above identified United States patent application, filed under the provisions of 35 U.S.C. 116 (United States Code), and 37 CFR 1.47(a), Rules of Practice in Patent Cases. Should a patent be granted on the application you will be designated therein as a joint inventor.

As a named inventor you are entitled to inspect any paper in the file wrapper of the application, order copies of all or any part thereof (at a prepaid cost per 37 CFR 1.19) or make your position of record in the application. Alternatively, you may arrange to do any of the preceding through a registered patent attorney or agent presenting written authorization from you. If you care to join in the application, counsel of record would presumably assist you. Joining in the application would entail the filing of an appropriate oath or declaration by you pursuant to 37 CFR 1.63.

Telephone inquiries regarding this communication should be directed to the undersigned at (571) 272-3206. Requests for information regarding your application should be directed to the File Information Unit at (703) 308-2733. Information regarding how to pay for and order a copy of the application, or a specific paper in the application, should be directed to Certification Division at (703) 308-9726 or 1 (800) 972-6382 (outside the Washington D.C. area).

/Liana Walsh/
Liana Walsh
Petitions Examiner
Office of Petitions

UNITED STATES PATENT AND TRADEMARK OFFICE

Commissioner for Patents
United States Patent and Trademark Office
P.O. Box 1450
Alexandria, VA 22313-1450
www.uspto.gov

OYEN, WIGGS, GREEN & MUTALA LLP
480 - THE STATION
601 WEST CORDOVA STREET
VANCOUVER BC V6B 1G1 CA CANADA

MAILED
NOV 16 2011
OFFICE OF PETITIONS

In re Application of
Gile Jun Yang Park
Application No. 13/181,445
Filed: July 12, 2011
Attorney Docket No. P313 0014/GNM

DECISION ON PETITION
TO MAKE SPECIAL UNDER
37 CFR 1.102(c)(1)

This is a decision on the petition under 37 CFR 1.102(c)(1), filed October 17, 2011, to make the above-identified application special based on applicant's age as set forth in M.P.E.P. § 708.02, Section IV.

The petition is **GRANTED**.

A grantable petition to make an application special under 37 CFR 1.102(c)(1) and MPEP § 708.02, Section IV: Applicant's Age must be accompanied by evidence showing that at least one of the applicants is 65 years of age, or more, such as a birth certificate or a statement by applicant. No fee is required

The instant petition includes a statement by inventor Gile Yun Yang Park, attesting to his/her age. The above-identified application has been accorded "special" status.

Telephone inquiries concerning this decision should be directed to Kimberly Inabinet at 571-272-4618.

The application is being forwarded to Technology Center 3783 for action on the merits commensurate with this decision.

/Kimberly Inabinet/

Kimberly Inabinet
Petitions Examiner
Office of Petitions

UNITED STATES PATENT AND TRADEMARK OFFICE

UNITED STATES DEPARTMENT OF COMMERCE
United States Patent and Trademark Office
Address: COMMISSIONER FOR PATENTS
P.O. Box 1450
Alexandria, Virginia 22313-1450
www.uspto.gov

APPLICATION NO.	FILING DATE	FIRST NAMED INVENTOR	ATTORNEY DOCKET NO.	CONFIRMATION NO.
13/181,499	07/12/2011	Michael T. Nordsiek	83136C15(54610)	4513

21874 7590 07/18/2011
EDWARDS ANGELL PALMER & DODGE LLP
P.O. BOX 55874
BOSTON, MA 02205

EXAMINER	
ART UNIT	PAPER NUMBER
1629	

MAIL DATE	DELIVERY MODE
07/18/2011	PAPER

Please find below and/or attached an Office communication concerning this application or proceeding.

The time period for reply, if any, is set in the attached communication.

JUL 1 8 2011

UNITED STATES PATENT AND TRADEMARK OFFICE

Commissioner for Patents
United States Patent and Trademark Office
P.O. Box 1450
Alexandria, VA 22313-1450
www.uspto.gov

EDWARDS ANGELL PALMER & DODGE LLP
P.O. BOX 55874
BOSTON MA 02205

In re Application of:
Nordsiek et al.

Serial No.: 13/181,499

Filed: : July 12, 2011

Docket: **83136C15(54610)**

Title: **2 X 2 X 2 WEEK DOSING REGIMEN FOR TREATING ACTINIC KERATOSIS WITH PHARMACEUTICAL COMPOSITIONS FORMULATED WITH 3.75 % IMIQUIMOD**

DECISION ON PETITION TO MAKE SPECIAL FOR NEW APPLICATION UNDER 37 C.F.R. § 1.102 & M.P.E.P. § 708.02

This is a decision on the petition July 12, 2011, to make the above-identified application special for accelerated examination procedure under 37 C.F.R. § 1.102(d).

The petition to make the application special is GRANTED.

The application is eligible for accelerated examination and the petition complies with the conditions for granting the application special status pursuant to the "Change to Practice for Petitions in Patent Applications to Make Special and for Accelerated Examination" published June 26, 2006, in the Federal Register. (71 Fed. Reg. 36323).

The prosecution of the instant application will be conducted expeditiously according to the following guidelines.

1. The application will be docketed to an examiner and taken up for action within two weeks of the date of this decision.

2. Restriction Practice:

If the examiner determines that the claims are not directed to a single invention, a telephone request to elect one single invention will be made pursuant to MPEP 812.01. As a prerequisite to the grant of this petition, the applicant has agreed to make an oral election, by telephone, without traverse. If the applicant refuses to make an election without traverse, or the examiner cannot reach the applicant after a reasonable effort, the examiner will treat the first claimed invention (invention defined by claim 1) as having being constructively elected without traverse for examination.

3. Office action:
   If it is determined that, after appropriate consultation, there is a potential rejection or any other issue to be addressed, the examiner will telephone the applicant and arrange an interview to discuss and resolve the issue. An Office action, other than a Notice of Allowance and Fee(s) Due (Notice of Allowance), will not be issued unless either: 1) an interview was conducted but did not result in agreed to action that places the application in condition for allowance, or, 2) a determination is made that an interview would be unlikely to result in the application being placed in condition for allowance, and 3) an internal conference has been held to review any rejection of any claim.

4. Time for Reply:
   An Office action other than a Notice of Allowance or a final Office action will set a shortened statutory period of one month or thirty days, whichever is longer, for reply with no extension of time available under 37 CFR 1.136(a). Failure to timely file a reply within this non-extendible period for reply will result in the abandonment of the application.

5. Reply by Applicant:
   A timely reply to an Office action other than the Notice of Allowance must be submitted electronically via EFS or EFS-web and limited to addressing the rejections, objections and requirement made. Any amendment that attempts to: 1) add claims which would result in more than three pending independent claims or more than twenty pending total claims; 2) present claims not encompassed by the pre-examination search or an updated accelerated examination support document; or 3) present claims that are directed a non-elected invention or an invention other than that previously claimed and examined in the application, will be treated as not fully responsive and will not be entered.

   For any amendment to the claims (including any new claim) that is not encompassed by the accelerated examination support document, applicant must provide an updated accelerated examination support document that encompasses the amended or new claims at the time of filing of the amendment.

   To proceed expeditiously with the examination, it is recommended that a reply with amendments made to any claim or with any new claim being added be accompanied by an updated accelerated examination support document or a statement explaining how the amended or new claim is supported by the original accelerated examination support document.

6. Information Disclosure Statement (IDS):
7. Any IDS filed during prosecution must be submitted electronically via EFS or EFS-web, accompanied by an updated accelerated examination support document, and be in compliance with 37 CFR 1.97 and 1.98.

8. Post-Allowance Processing:
   To expedite processing of the allowed application into a patent, the applicant must: 1) pay the required fees within one month of the date of the Notice of Allowance, and 2) not file any post allowance papers not required by the Office. In no event may the issue fee be paid and accepted later than three months from the date of the Notice of Allowance.

9. After-Final and Appeal Procedures:
   To expedite prosecution, after receiving the final Office action, applicant must: 1) promptly file a notice of appeal, an appeal brief and appeal fees; and 2) not request a pre-appeal brief conference.

   Any amendment, affidavit or other evidence filed after final Office action must comply with applicable rules and the requirements outlined in numbered paragraphs 5 and 6 above.

   On appeal, the application will proceed according to normal appeal procedures. After appeal, the application will again be treated special.

10. Proceedings Outside the Normal Examination Process:
    If the application becomes involved in a proceeding that is outside the normal examination process (e.g., a secrecy order, national security review, interference proceeding, petitions under 37 CFR 1.181, 182 or 183), the application will be treated special before and after such proceeding.

11. Final Disposition:
    The twelve month goal of this accelerated examination procedure ends with a final disposition. The mailing of a final Office action, a Notice of Allowance, the filing of a Notice of Appeal, or the filing of a Request for Continued Examination (RCE) is the final disposition.

If, during prosecution, a paper is not filed electronically using EFS-web, a reply is filed but is not fully responsive, the application is involved in an appeal, or a proceeding outside normal examination process, the application will still be examined expeditiously, however, the final disposition may occur more than twelve months from the filing of the application.

Any inquiry regarding this decision should be directed to Marianne C. Seidel, Quality Assurance Specialist, at (571) 272-0584.

/MC Seidel/
Marianne C. Seidel, Quality Assurance Specialist
Technology Center 1600

UNITED STATES PATENT AND TRADEMARK OFFICE

UNITED STATES DEPARTMENT OF COMMERCE
United States Patent and Trademark Office
Address: COMMISSIONER FOR PATENTS
P.O. Box 1450
Alexandria, Virginia 22313-1450
www.uspto.gov

APPLICATION NO.	FILING DATE	FIRST NAMED INVENTOR	ATTORNEY DOCKET NO.	CONFIRMATION NO.
13/181,507	07/12/2011	Michael T. Nordsiek	83136C13(54610)	4530

21874 7590 07/18/2011

EDWARDS ANGELL PALMER & DODGE LLP
P.O. BOX 55874
BOSTON, MA 02205

EXAMINER	
ART UNIT	PAPER NUMBER
1629	

MAIL DATE	DELIVERY MODE
07/18/2011	PAPER

Please find below and/or attached an Office communication concerning this application or proceeding.

The time period for reply, if any, is set in the attached communication.

UNITED STATES PATENT AND TRADEMARK OFFICE

JUL 18 2011

Commissioner for Patents
United States Patent and Trademark Office
P.O. Box 1450
Alexandria, VA 22313-1450
www.uspto.gov

EDWARDS ANGELL PALMER & DODGE LLP
P.O. BOX 55874
BOSTON MA 02205

In re Application of:
Nordsiek et al.

Serial No.: 13/181,507

Filed: : July 12, 2011

Docket: **83136C13(54610)**

Title: **LOWER DOSAGE STRENGTH PHARMACEUTICAL COMPOSITIONS FORUMLATED WITH 3.75% IMIQUIMOD**

DECISION ON PETITION TO MAKE SPECIAL FOR NEW APPLICATION UNDER 37 C.F.R. § 1.102 & M.P.E.P. § 708.02

This is a decision on the petition July 12, 2011, to make the above-identified application special for accelerated examination procedure under 37 C.F.R. § 1.102(d).

The petition to make the application special is GRANTED.

The application is eligible for accelerated examination and the petition complies with the conditions for granting the application special status pursuant to the "Change to Practice for Petitions in Patent Applications to Make Special and for Accelerated Examination" published June 26, 2006, in the Federal Register. (71 Fed. Reg. 36323).

The prosecution of the instant application will be conducted expeditiously according to the following guidelines.

1. The application will be docketed to an examiner and taken up for action within two weeks of the date of this decision.

2. Restriction Practice:
   If the examiner determines that the claims are not directed to a single invention, a telephone request to elect one single invention will be made pursuant to MPEP 812.01. As a prerequisite to the grant of this petition, the applicant has agreed to make an oral

election, by telephone, without traverse. If the applicant refuses to make an election without traverse, or the examiner cannot reach the applicant after a reasonable effort, the examiner will treat the first claimed invention (invention defined by claim 1) as having being constructively elected without traverse for examination.

3. Office action:
If it is determined that, after appropriate consultation, there is a potential rejection or any other issue to be addressed, the examiner will telephone the applicant and arrange an interview to discuss and resolve the issue. An Office action, other than a Notice of Allowance and Fee(s) Due (Notice of Allowance), will not be issued unless either: 1) an interview was conducted but did not result in agreed to action that places the application in condition for allowance, or, 2) a determination is made that an interview would be unlikely to result in the application being placed in condition for allowance, and 3) an internal conference has been held to review any rejection of any claim.

4. Time for Reply:
An Office action other than a Notice of Allowance or a final Office action will set a shortened statutory period of one month or thirty days, whichever is longer, for reply with no extension of time available under 37 CFR 1.136(a). Failure to timely file a reply within this non-extendible period for reply will result in the abandonment of the application.

5. Reply by Applicant:
A timely reply to an Office action other than the Notice of Allowance must be submitted electronically via EFS or EFS-web and limited to addressing the rejections, objections and requirement made. Any amendment that attempts to: 1) add claims which would result in more than three pending independent claims or more than twenty pending total claims; 2) present claims not encompassed by the pre-examination search or an updated accelerated examination support document; or 3) present claims that are directed a non-elected invention or an invention other than that previously claimed and examined in the application, will be treated as not fully responsive and will not be entered.

For any amendment to the claims (including any new claim) that is not encompassed by the accelerated examination support document, applicant must provide an updated accelerated examination support document that encompasses the amended or new claims at the time of filing of the amendment.

To proceed expeditiously with the examination, it is recommended that a reply with amendments made to any claim or with any new claim being added be accompanied by an updated accelerated examination support document or a statement explaining how the amended or new claim is supported by the original accelerated examination support document.

6. Information Disclosure Statement (IDS):

7. Any IDS filed during prosecution must be submitted electronically via EFS or EFS-web, accompanied by an updated accelerated examination support document, and be in compliance with 37 CFR 1.97 and 1.98.

8. Post-Allowance Processing:
   To expedite processing of the allowed application into a patent, the applicant must: 1) pay the required fees within one month of the date of the Notice of Allowance, and 2) not file any post allowance papers not required by the Office. In no event may the issue fee be paid and accepted later than three months from the date of the Notice of Allowance.

9. After-Final and Appeal Procedures:
   To expedite prosecution, after receiving the final Office action, applicant must: 1) promptly file a notice of appeal, an appeal brief and appeal fees; and 2) not request a pre-appeal brief conference.

   Any amendment, affidavit or other evidence filed after final Office action must comply with applicable rules and the requirements outlined in numbered paragraphs 5 and 6 above.

   On appeal, the application will proceed according to normal appeal procedures. After appeal, the application will again be treated special.

10. Proceedings Outside the Normal Examination Process:
    If the application becomes involved in a proceeding that is outside the normal examination process (e.g., a secrecy order, national security review, interference proceeding, petitions under 37 CFR 1.181, 182 or 183), the application will be treated special before and after such proceeding.

11. Final Disposition:
    The twelve month goal of this accelerated examination procedure ends with a final disposition. The mailing of a final Office action, a Notice of Allowance, the filing of a Notice of Appeal, or the filing of a Request for Continued Examination (RCE) is the final disposition.

If, during prosecution, a paper is not filed electronically using EFS-web, a reply is filed but is not fully responsive, the application is involved in an appeal, or a proceeding outside normal examination process, the application will still be examined expeditiously, however, the final disposition may occur more than twelve months from the filing of the application.

Any inquiry regarding this decision should be directed to Marianne C. Seidel, Quality Assurance Specialist, at (571) 272-0584.

/MC Seidel/
Marianne C. Seidel, Quality Assurance Specialist
Technology Center 1600

Doc code : PET.OP.AGE
Description : Petition to make special based on Age/Health

PTO/SB/130 (07-09)
Approved for use through 07/31/2012. OMB 0651- 0031
U.S. Patent and Trademark Office; U.S. DEPARTMENT OF COMMERCE
Under the Paperwork Reduction Act of 1995, no persons are required to respond to a collection of information unless it contains a valid OMB control number

PETITION TO MAKE SPECIAL BASED ON AGE FOR ADVANCEMENT OF EXAMINATION UNDER 37 CFR 1.102(c)(1)

Application Information

Application Number	13181556	Confirmation Number	4623	Filing Date	2011-07-13
Attorney Docket Number (optional)	100161-US2	Art Unit	2858	Examiner	TBD
First Named Inventor	David N. Walker				
Title of Invention	RF Probe Technique for Determining Plasma Potential				

Attention: Office of Petitions
An application may be made special for advancement of examination upon filing of a petition showing that the applicant is 65 years of age, or more. No fee is required with such a petition. See 37 CFR 1.102(c)(1) and MPEP 708.02 (IV).

APPLICANT HEREBY PETITIONS TO MAKE SPECIAL FOR ADVANCEMENT OF EXAMINATION IN THIS APPLICATION UNDER 37 CFR 1.102(c)(1) and MPEP 708.02 (IV) ON THE BASIS OF THE APPLICANT'S AGE.

A grantable petition requires one of the following items:
(1) Statement by one named inventor in the application that he/she is 65 years of age, or more; or
(2) Certification by a registered attorney/agent having evidence such as a birth certificate, passport, driver's license, etc. showing one named inventor in the application is 65 years of age, or more.

Name of Inventor who is 65 years of age, or older

Given Name	Middle Name	Family Name	Suffix
David	N.	Walker	

A signature of the applicant or representative is required in accordance with 37 CFR 1.33 and 10.18. Please see 37 CFR 1.4(d) for the format of the signature.

Select (1) or (2) :

○ (1) I am an inventor in this application and I am 65 years of age, or more.

● (2) I am an attorney or agent registered to practice before the Patent and Trademark Office, and I certify that I am in possession of evidence, and will retain such in the application file record, showing that the inventor listed above is 65 years of age, or more.

Signature	/Joslyn Barritt/	Date (YYYY-MM-DD)	2011-08-02
Name	Joslyn Barritt	Registration Number	56296

PTO/SB/130 (07-09)
Approved for use through 07/31/2012. OMB 0651- 0031
U.S. Patent and Trademark Office; U.S. DEPARTMENT OF COMMERCE
Under the Paperwork Reduction Act of 1995, no persons are required to respond to a collection of information unless it contains a valid OMB control number

Privacy Act Statement

The Privacy Act of 1974 (P.L. 93-579) requires that you be given certain information in connection with your submission of the attached form related to a patent application or patent. Accordingly, pursuant to the requirements of the Act, please be advised that: (1) the general authority for the collection of this information is 35 U.S.C. 2(b)(2); (2) furnishing of the information solicited is voluntary; and (3) the principal purpose for which the information is used by the U.S. Patent and Trademark Office is to process and/or examine your submission related to a patent application or patent. If you do not furnish the requested information, the U.S. Patent and Trademark Office may not be able to process and/or examine your submission, which may result in termination of proceedings or abandonment of the application or expiration of the patent.

The information provided by you in this form will be subject to the following routine uses:

1. The information on this form will be treated confidentially to the extent allowed under the Freedom of Information Act (5 U.S.C. 552) and the Privacy Act (5 U.S.C. 552a). Records from this system of records may be disclosed to the Department of Justice to determine whether the Fr eedom of Information Act requires disclosure of these records.

2. A record from this system of records may be disclosed, as a routine use, in the course of presenting evidence to a court, magistrate, or administrative tribunal, including disclosures to opposing counsel in the course of settlement negotiations.

3. A record in this system of records may be disclosed, as a routine use, to a Member of Congress submitting a request involving an individual, to whom the record pertains, when the individual has requested assistance from the Member with respect to the subject matter of the record.

4. A record in this system of records may be disclosed, as a routine use, to a contractor of the Agency having need for the information in order to perform a contract. Recipients of information shall be required to comply with the requirements of the Privacy Act of 1974, as amended, pursuant to 5 U.S.C. 552a(m).

5. A record related to an International Application filed under the Patent Cooperation Treaty in this system of records may be disclosed, as a routine use, to the International Bureau of the World Intellectual Property Organization, pursuant to the Patent Cooperation Treaty.

6. A record in this system of records may be disclosed, as a routine use, to another federal agency for purposes of National Security review (35 U.S.C. 181) and for review pursuant to the Atomic Energy Act (42 U.S.C. 218(c)).

7. A record from this system of records may be disclosed, as a routine use, to the Administrator, General Services, or his/her designee, during an inspection of records conducted by GSA as part of that agency's responsibility to recommend improvements in records management practices and programs, under authority of 44 U.S.C. 2904 and 2906. Such disclosure shall be made in accordance with the GSA regulations governing inspection of records for this purpose, and any other relevant (i.e., GSA or Commerce) directive. Such disclosure shall not be used to make determinations about indivi duals.

8. A record from this system of records may be disclosed, as a routine use, to the public after either publication of the application pursuant to 35 U.S.C. 122(b) or issuance of a patent pursuant to 35 U.S.C. 151. Further, a record may be disclosed, subject to the limitations of 37 CFR 1.14, as a routine use, to the public if the record was filed in an application which became abandoned or in which the proceedings were terminated and which application is referenced by either a published application, an application open to public inspections or an issued patent.

9. A record from this system of records may be disclosed, as a routine use, to a Federal, State, or local law enforcement agency, if the USPTO becomes aware of a violation or potential violation of law or regulation.

UNITED STATES PATENT AND TRADEMARK OFFICE

Commissioner for Patents
United States Patent and Trademark Office
P.O. Box 1450
Alexandria, VA 22313-1450
www.uspto.gov

In re Application of
David N. Walker

Application No. 13181556

Filed: July 13,2011

Attorney Docket No. 100161-US2

:
:
:DECISION ON PETITION TO MAKE SPECIAL
:UNDER 37 CFR 1.102(c)(1)
:

This is a decision on the electronic petition under 37 CFR 1.102 (c)(1), filed 02-AUG-2011 to make the above-identified application special based on applicant's age as set forth in MPEP § 708.02, Section IV.

The petition is **GRANTED**.

A grantable petition to make an application special under 37 CFR 1.102(c)(1), MPEP § 708.02, Section IV: Applicant's Age must include a statement by applicant or a registered practitioner having evidence that applicant is at least 65 years of age. No fee is required.

Accordingly, the above-identified application has been accorded "special" status and will be taken up for action by the examiner upon the completion of all pre-examination processing.

Telephone inquiries concerning this electronic decision should be directed to the Electronic Business Center at 866-217-9197.

All other inquiries concerning either the examination or status of the application should be directed to the Technology Center.

UNITED STATES PATENT AND TRADEMARK OFFICE

UNITED STATES DEPARTMENT OF COMMERCE
United States Patent and Trademark Office
Address: COMMISSIONER FOR PATENTS
P.O. Box 1450
Alexandria, Virginia 22313-1450
www.uspto.gov

APPLICATION NO.	FILING DATE	FIRST NAMED INVENTOR	ATTORNEY DOCKET NO.	CONFIRMATION NO.
13/181,677	07/13/2011	Daisuke YAMAGIWA	102238.63688US	4879

7590 02/08/2012

CROWELL & MORING LLP
INTELLECTUAL PROPERTY GROUP
P.O. BOX 14300
WASHINGTON, DC 20044-4300

EXAMINER	
YE, LIN	
ART UNIT	PAPER NUMBER
2622	
NOTIFICATION DATE	DELIVERY MODE
02/08/2012	ELECTRONIC

DECISION GRANTING PETITION UNDER 37 CFR 1.138(d)

The declaration of express abandonment is recognized

This is in response to the petition under 37 CFR 1.138(d), requesting for a refund of any previously paid search fee and excess claims fee in the above-identified application.

The petition is granted.

The express abandonment is recognized. Any previously paid search fee and excess claims fee are hereby refunded.

Telephone inquiries should be directed to the Office of Data Management at (571) 272-4200.

Mimi Farmer

Patent Publication Branch
Office of Data Management

UNITED STATES PATENT AND TRADEMARK OFFICE

Commissioner for Patents
United States Patent and Trademark Office
P.O. Box 1450
Alexandria, VA 22313-1450
www.uspto.gov

FLIESLER MEYER LLP
650 CALIFORNIA STREET
14TH FLOOR
SAN FRANCISCO CA 94108

MAILED

AUG 01 2011

OFFICE OF PETITIONS

In re Application of :
Wong et al. :
Application No. 13/181,756 : ON PETITION
Filed: July 13, 2011
Attorney Docket No. DGCM-01026US0 :
:

This is a decision on the petition under 37 CFR 1.102(c)(1), filed July 13, 2011, to make the above-identified application special based on applicant's age as set forth in M.P.E.P. § 708.02, Section IV.

The petition is **GRANTED**.

A grantable petition to make an application special under 37 CFR 1.102(c)(1) and MPEP § 708.02, Section IV: Applicant's Age must be accompanied by evidence showing that at least one of the applicants is 65 years of age, or more, such as a birth certificate or a statement by applicant. No fee is required

The instant petition includes a statement (PTO/SB/130 form) by applicant's attorney that applicant is 65 years of age. Accordingly, the above-identified application has been accorded "special" status.

Telephone inquiries concerning this decision should be directed to the undersigned at 571-272-7751. All other inquiries concerning either the examination or status of the application should be directed to the Technology Center.

This matter is being referred to the Office of Patent Application Processing for further processing in accordance with this decision on petition.

/Joan Olszewski/
Joan Olszewski
Petitions Examiner
Office of Petitions

UNITED STATES PATENT AND TRADEMARK OFFICE

UNITED STATES DEPARTMENT OF COMMERCE
United States Patent and Trademark Office
Address: COMMISSIONER FOR PATENTS
P.O. Box 1450
Alexandria, Virginia 22313-1450
www.uspto.gov

APPLICATION NO.	FILING DATE	FIRST NAMED INVENTOR	ATTORNEY DOCKET NO.	CONFIRMATION NO.
13/182,034	07/13/2011	Henrik ANDREASSON	6107-0209PUS2	5580

11057 7590 08/25/2011
Birch, Stewart, Kolasch & Birch, LLP
P.O. Box 747
Falls Church, VA 22040-0747

EXAMINER	
ART UNIT	PAPER NUMBER
2472	

NOTIFICATION DATE	DELIVERY MODE
08/25/2011	ELECTRONIC

Please find below and/or attached an Office communication concerning this application or proceeding.

The time period for reply, if any, is set in the attached communication.

Notice of the Office communication was sent electronically on above-indicated "Notification Date" to the following e-mail address(es):

mailroom@bskb.com

UNITED STATES PATENT AND TRADEMARK OFFICE

Commissioner for Patents
United States Patent and Trademark Office
P.O. Box 1450
Alexandria, VA 22313-1450
www.uspto.gov

Birch, Stewart, Kolasch & Birch, LLP
P.O. Box 747
Falls Church VA 22040-0747

In re Application of: Henrik Andreasson
Application No. 13182034
Filed: July 13, 2011
For: **METHOD FOR RELIABLE DETECTION OF THE STATUS OF AN RTP PACKET STREAM**

DECISION ON REQUEST TO PARTICIPATE IN PATENT PROSECUTION HIGHWAY PROGRAM AND PETITION TO MAKE SPECIAL UNDER 37 CFR 1.102(d)

This is a decision on the request to participate in the Patent Prosecution Highway (PPH) program and the petition under 37 CFR 1.102(d), filed July 20, 2011, to make the above-identified application special.

The petition is **GRANTED.**

A grantable request to participate in the PPH program and petition to make special require:

(1) The U.S. application is
(a) a Paris Convention application which either (i) validly claims priority under 35 U.S.C. 119(a) and 37 CFR 1.55 to one or more applications filed in the EPO, or (ii) validly claims priority to a PCT application that contains no priority claims, or
(b) a national stage application under the PCT (an application which entered the national stage in the U.S. from a PCT international application after compliance with 35 U.S.C. 371), which PCT application (i) validly claims priority to an application filed in the EPO, or (ii) validly claims priority to a PCT application that contains no priority claims, or (iii) contains no priority claim, or
(c) a so-called bypass application filed under 35 U.S.C. 111 (a) which validly claims benefit under 35 U.S.C. 120 to a PCT application, which PCT application (i) validly claims priority to an application filed in the EPO, or (ii) validly claims priority to a PCT application that contains no priority claims, or (iii) contains no priority claim.

Where the EPO application that contains the allowable/patentable claims is not the same application for which priority is claimed in the U.S. application, applicant must identify the relationship between the EPO application that contains the allowable/patentable claims and the EPO priority application claimed in the U.S. application.

(2) Applicant must submit a copy of the allowable/patentable claim(s) from the EPO application(s)

(3) All the claims in the U.S. application must sufficiently correspond to the allowable/patentable claim(s) in the EPO application(s)

(4) Examination of the U.S. application has not begun;

(5) Applicant must submit a copy of all the office actions from each of the EPO application(s) containing the allowable/patentable claim(s);

(6) Applicant must submit an IDS listing the documents cited by the EPO examiner in the EPO office action along with copies of documents except U.S. patents or U.S. patent application publications.

The request to participate in the PPH program and petition are found to comply with the above requirements. Accordingly, the above-identified application has been accorded "special" status.

Telephone inquiries concerning this decision should be directed to Chau Nguyen at 571-272-3126

All other inquiries concerning the examination or status of the application is accessible in the PAIR system at http://www.uspto.gov/ebc/index.html.

The application is being forwarded to the examiner for action on the merits commensurate with this decision.

/Chau Nguyen/

Chau Nguyen
Quality Assurance Specialist
Technology Center 2400

UNITED STATES PATENT AND TRADEMARK OFFICE

Commissioner for Patents
United States Patent and Trademark Office
P.O. Box 1450
Alexandria, VA 22313-1450
www.uspto.gov

In re Application of
Shahen Minassian

Application No. 13182063

Filed: July 13,2011

Attorney Docket No. 124.1065CIP

:
:
:DECISION ON PETITION TO MAKE SPECIAL
:UNDER 37 CFR 1.102(c)(1)
:

This is a decision on the electronic petition under 37 CFR 1.102 (c)(1), filed 28-NOV-2011 to make the above-identified application special based on applicant's age as set forth in MPEP § 708.02, Section IV.

The petition is **GRANTED**.

A grantable petition to make an application special under 37 CFR 1.102(c)(1), MPEP § 708.02, Section IV: Applicant's Age must include a statement by applicant or a registered practitioner having evidence that applicant is at least 65 years of age. No fee is required.

Accordingly, the above-identified application has been accorded "special" status and will be taken up for action by the examiner upon the completion of all pre-examination processing.

Telephone inquiries concerning this electronic decision should be directed to the Electronic Business Center at 866-217-9197.

All other inquiries concerning either the examination or status of the application should be directed to the Technology Center.

Doc code : PET.OP.AGE
Description : Petition to make special based on Age/Health

PTO/SB/130 (07-09)
Approved for use through 07/31/2012. OMB 0651- 0031
U.S. Patent and Trademark Office; U.S. DEPARTMENT OF COMMERCE
Under the Paperwork Reduction Act of 1995, no persons are required to respond to a collection of information unless it contains a valid OMB control number

PETITION TO MAKE SPECIAL BASED ON AGE FOR ADVANCEMENT OF EXAMINATION UNDER 37 CFR 1.102(c)(1)

Application Information

Application Number	13182063	Confirmation Number	5638	Filing Date	2011-07-13
Attorney Docket Number (optional)	124.1065CIP	Art Unit	2618	Examiner	
First Named Inventor	SHAHEN MINASSIAN				
Title of Invention	Low Phase Noise RF Signal Generating System and Phase Noise Measurement Calibrating Method				

Attention: Office of Petitions
An application may be made special for advancement of examination upon filing of a petition showing that the applicant is 65 years of age, or more. No fee is required with such a petition. See 37 CFR 1.102(c)(1) and MPEP 708.02 (IV).

APPLICANT HEREBY PETITIONS TO MAKE SPECIAL FOR ADVANCEMENT OF EXAMINATION IN THIS APPLICATION UNDER 37 CFR 1.102(c)(1) and MPEP 708.02 (IV) ON THE BASIS OF THE APPLICANT'S AGE.

A grantable petition requires one of the following items:
(1) Statement by one named inventor in the application that he/she is 65 years of age, or more; or
(2) Certification by a registered attorney/agent having evidence such as a birth certificate, passport, driver's license, etc. showing one named inventor in the application is 65 years of age, or more.

Name of Inventor who is 65 years of age, or older

Given Name	Middle Name	Family Name	Suffix
ELI		LEVI	

A signature of the applicant or representative is required in accordance with 37 CFR 1.33 and 10.18.
Please see 37 CFR 1.4(d) for the format of the signature.

Select (1) or (2) :

○ (1) I am an inventor in this application and I am 65 years of age, or more.

● (2) I am an attorney or agent registered to practice before the Patent and Trademark Office, and I certify that I am in possession of evidence, and will retain such in the application file record, showing that the inventor listed above is 65 years of age, or more.

Signature	/BRIAN ROFFE/	Date (YYYY-MM-DD)	2011-11-28
Name	BRIAN ROFFE	Registration Number	35336

PTO/SB/130 (07-09)
Approved for use through 07/31/2012. OMB 0651- 0031
U.S. Patent and Trademark Office; U.S. DEPARTMENT OF COMMERCE
Under the Paperwork Reduction Act of 1995, no persons are required to respond to a collection of information unless it contains a valid OMB control number

Privacy Act Statement

The Privacy Act of 1974 (P.L. 93-579) requires that you be given certain information in connection with your submission of the attached form related to a patent application or patent. Accordingly, pursuant to the requirements of the Act, please be advised that: (1) the general authority for the collection of this information is 35 U.S.C. 2(b)(2); (2) furnishing of the information solicited is voluntary; and (3) the principal purpose for which the information is used by the U.S. Patent and Trademark Office is to process and/or examine your submission related to a patent application or patent. If you do not furnish the requested information, the U.S. Patent and Trademark Office may not be able to process and/or examine your submission, which may result in termination of proceedings or abandonment of the application or expiration of the patent.

The information provided by you in this form will be subject to the following routine uses:

1. The information on this form will be treated confidentially to the extent allowed under the Freedom of Information Act (5 U.S.C. 552) and the Privacy Act (5 U.S.C. 552a). Records from this system of records may be disclosed to the Department of Justice to determine whether the Fr eedom of Information Act requires disclosure of these records.

2. A record from this system of records may be disclosed, as a routine use, in the course of presenting evidence to a court, magistrate, or administrative tribunal, including disclosures to opposing counsel in the course of settlement negotiations.

3. A record in this system of records may be disclosed, as a routine use, to a Member of Congress submitting a request involving an individual, to whom the record pertains, when the individual has requested assistance from the Member with respect to the subject matter of the record.

4. A record in this system of records may be disclosed, as a routine use, to a contractor of the Agency having need for the information in order to perform a contract. Recipients of information shall be required to comply with the requirements of the Privacy Act of 1974, as amended, pursuant to 5 U.S.C. 552a(m).

5. A record related to an International Application filed under the Patent Cooperation Treaty in this system of records may be disclosed, as a routine use, to the International Bureau of the World Intellectual Property Organization, pursuant to the Patent Cooperation Treaty.

6. A record in this system of records may be disclosed, as a routine use, to another federal agency for purposes of National Security review (35 U.S.C. 181) and for review pursuant to the Atomic Energy Act (42 U.S.C. 218(c)).

7. A record from this system of records may be disclosed, as a routine use, to the Administrator, General Services, or his/her designee, during an inspection of records conducted by GSA as part of that agency's responsibility to recommend improvements in records management practices and programs, under authority of 44 U.S.C. 2904 and 2906. Such disclosure shall be made in accordance with the GSA regulations governing inspection of records for this purpose, and any other relevant (i.e., GSA or Commerce) directive. Such disclosure shall not be used to make determinations about indivi duals.

8. A record from this system of records may be disclosed, as a routine use, to the public after either publication of the application pursuant to 35 U.S.C. 122(b) or issuance of a patent pursuant to 35 U.S.C. 151. Further, a record may be disclosed, subject to the limitations of 37 CFR 1.14, as a routine use, to the public if the record was filed in an application which became abandoned or in which the proceedings were terminated and which application is referenced by either a published application, an application open to public inspections or an issued patent.

9. A record from this system of records may be disclosed, as a routine use, to a Federal, State, or local law enforcement agency, if the USPTO becomes aware of a violation or potential violation of law or regulation.

UNITED STATES PATENT AND TRADEMARK OFFICE

Commissioner for Patents
United States Patent and Trademark Office
P.O. Box 1450
Alexandria, VA 22313-1450
www.uspto.gov

DEMONT & BREYER, LLC
100 COMMONS WAY, STE. 250
HOLMDEL NJ 07333

MAILED
AUG 23 2011
OFFICE OF PETITIONS

In re Application of :
ALLEGRA, et al :
Application No. 13/182,070 : DECISION ON PETITION
Filed: July 13, 2011 : TO MAKE SPECIAL UNDER
Attorney Docket No. 465-071US : 37 CFR 1.102(c)(1)
:

This is a decision on the petition under 37 CFR 1.102(c)(1), filed August 2, 2011, to make the above-identified application special based on applicant's age as set forth in M.P.E.P. § 708.02, Section IV.

The petition is **GRANTED**.

A grantable petition to make an application special under 37 CFR 1.102(c)(1) and MPEP § 708.02, Section IV: Applicant's Age must be accompanied by evidence showing that at least one of the applicants is 65 years of age, or more, such as a birth certificate or a statement by applicant. No fee is required

The instant petition includes a copy of applicant David Stevenson driver's license. Accordingly, the above-identified application has been accorded "special" status.

Telephone inquiries concerning this decision should be directed to the undersigned at (571) 272-6735.

All other inquires concerning the status of this application should be directed to the Office of Data Management at (571) 272-4000.

This application is being referred back to the Office of Data Management for processing. This application will be accorded "special" status when pre-examination processing is done.

/Diane C. Goodwyn/
Diane C. Goodwyn
Petitions Examiner
Office of Petitions

UNITED STATES PATENT AND TRADEMARK OFFICE

UNITED STATES DEPARTMENT OF COMMERCE
United States Patent and Trademark Office
Address: COMMISSIONER FOR PATENTS
P.O. Box 1450
Alexandria, Virginia 22313-1450
www.uspto.gov

APPLICATION NO.	FILING DATE	FIRST NAMED INVENTOR	ATTORNEY DOCKET NO.	CONFIRMATION NO.
13/182,130	07/13/2011	Nobuaki Kondou	P40257	5759

7055 7590 08/01/2011

GREENBLUM & BERNSTEIN, P.L.C.
1950 ROLAND CLARKE PLACE
RESTON, VA 20191

EXAMINER	
ART UNIT	PAPER NUMBER
3742	

NOTIFICATION DATE	DELIVERY MODE
08/01/2011	ELECTRONIC

Please find below and/or attached an Office communication concerning this application or proceeding.

The time period for reply, if any, is set in the attached communication.

Notice of the Office communication was sent electronically on above-indicated "Notification Date" to the following e-mail address(es):

gbpatent@gbpatent.com
pto@gbpatent.com

UNITED STATES PATENT AND TRADEMARK OFFICE

Commissioner for Patents
United States Patent and Trademark Office
P.O. Box 1450
Alexandria, VA 22313-1450
www.uspto.gov

GREENBLUM & BERNSTEIN, P.L.C.
1950 ROLAND CLARKE PLACE
RESTON VA 20191

In re Application of: KONDOU, NOBUAKI Serial No.: 13/182130 Filed: July 13, 2011 Attorney Docket No. : P40257 Title: ICE CAKE MAKING APPARATUS AND METHOD	DECISION ON A REQUEST TO PARTICIPATE IN PATENT PROSECUTION HIGHWAY PROGRAM AND PETITION TO MAKE SPECIAL UNDER CFR 1.102(a)

This is a decision on the request to participate in the Patent Prosecution Highway (PPH) program and the petition under 37 CFR 1.102(a), filed July 28, 2011 to make the above-identified application special.

The request and petition are **dismissed**.

A grantable request to participate in the PPH pilot program and petition to make special require:

(1) The U.S. application must validly claim priority under 35 U.S.C. 119(a) to one or more applications filed in the JPO;
(2) Applicant must submit a copy of the allowable/patentable claim(s) from the JPO application(s) along with an English translation thereof and a statement that the English translation is accurate;
(3) All the claims in the U.S. application must sufficiently correspond or be amended to sufficiently correspond to the allowable/patentable claim(s) in the JPO application(s);
(4) Examination of the U.S. application has not begun;
(5) Applicant must submit a copy of all the office actions from each of the JPO application(s) containing the allowable/patentable claim(s) along with an English translation thereof and a statement that the English translation is accurate; and
(6) Applicant must submit an IDS listing the documents cited by the JPO examiner in the JPO office action along with copies of documents except U.S. patents or U.S. patent application publications.

The request to participate in the PPH program and petition met all conditions except Item #6 above.

The request to participate in the PPH program and petition fail to include copies of the JPO cited references. Within the JPO office action, the examiner cited five Japanese patent documents in making the rejection. Applicant indicates in the petition that these documents are attached along with the IDS. However, the record shows that although Applicant did file an IDS listing these foreign references, Applicant never submitted copies of them. Since these are foreign references (i.e. not U.S. patents or U.S. patent application publications), a copy of each of them is required in order to satisfy Item #6.

Applicant is encouraged to cite and submit all relevant prior art references, if any, to facilitate examination in this application.

Applicant is given a time period of **ONE MONTH or THIRTY DAYS**, whichever is longer, from the mailing date of this decision to correct the deficiencies. **NO EXTENSION OF TIME UNDER 37 CFR 1.136 IS PERMITTED.** If the deficiencies are not corrected with the time period given, the application will await action in its regular turn. Response must be filed via EFS-Web.

Telephone inquiries concerning this decision should be directed to Henry C. Yuen at 571-272-4856.

Petition is **dismissed**.

/Henry C. Yuen/

Henry C. Yuen, Special Programs Examiner
Technology Center 3700 – Mechanical Engineering,
Manufacturing and Products
571-272-4856

UNITED STATES PATENT AND TRADEMARK OFFICE

UNITED STATES DEPARTMENT OF COMMERCE
United States Patent and Trademark Office
Address: COMMISSIONER FOR PATENTS
P.O. Box 1450
Alexandria, Virginia 22313-1450
www.uspto.gov

APPLICATION NO.	FILING DATE	FIRST NAMED INVENTOR	ATTORNEY DOCKET NO.	CONFIRMATION NO.
13/182,130	07/13/2011	Nobuaki Kondou	P40257	5759

7055 7590 09/12/2011

GREENBLUM & BERNSTEIN, P.L.C.
1950 ROLAND CLARKE PLACE
RESTON, VA 20191

EXAMINER	
ART UNIT	PAPER NUMBER
3742	

NOTIFICATION DATE	DELIVERY MODE
09/12/2011	ELECTRONIC

Please find below and/or attached an Office communication concerning this application or proceeding.

The time period for reply, if any, is set in the attached communication.

Notice of the Office communication was sent electronically on above-indicated "Notification Date" to the following e-mail address(es):

gbpatent@gbpatent.com
pto@gbpatent.com

UNITED STATES PATENT AND TRADEMARK OFFICE

Commissioner for Patents
United States Patent and Trademark Office
P.O. Box 1450
Alexandria, VA 22313-1450
www.uspto.gov

GREENBLUM & BERNSTEIN, P.L.C.
1950 ROLAND CLARKE PLACE
RESTON VA 20191

In re Application of	:	
KONDOU, NOBUAKI, et al .	:	DECISION ON REQUEST TO
Application No. 13/182,130	:	PARTICIPATE IN PATENT
Filed: July 13, 2011	:	PCT/PROSECUTION HIGHWAY
Attorney Docket No. P40257	:	PROGRAM AND PETITION
For: ICE CAKE MAKING APPARATUS AND METHOD	:	TO MAKE SPECIAL UNDER 37 CFR 1.102(a)

This is a decision on the request to participate in the Patent Prosecution Highway (PPH) program and the petition under 37 CFR 1.102(a), filed August 01, 2011 to make the above-identified application special.

The request and petition are granted.

A grantable request to participate in the PPH pilot program and petition to make special require:

(1) The U.S. application must validly claim priority under 35 U.S.C. 119(a) to one or more applications filed in the JPO;
(2) Applicant must submit a copy of the allowable/patentable claim(s) from the JPO/PCT application(s) along with an English translation thereof and a statement that the English translation is accurate;
(3) All the claims in the U.S. application must sufficiently correspond or be amended to sufficiently correspond to the allowable/patentable claim(s) in the JPO application(s);
(4) Examination of the U.S. application has not begun;
(5) Applicant must submit a copy of all the office actions from each of the JPO/PCT application(s) containing the allowable/patentable claim(s) along with an English translation thereof and a statement that the English translation is accurate; and
(6) Applicant must submit an IDS listing the documents cited by the JPO examiner in the JPO office action along with copies of documents except U.S. patents or U.S. patent application publications.
In light of the petition being properly submitted, the request to participate in the PPH program and the petition comply with the above requirements. Accordingly, the above-identified application has been accorded "special" status.

The applicant is encouraged to cite and submit all relevant prior art references, if any, to facilitate examination in this application. Upon completion of pre-examination processing, this application will be forwarded to an examiner for examination.

Telephone inquiries concerning this decision should be directed to Henry C. Yuen at 571-272-4485. All other inquiries concerning the examination or status of the application should be directed to Tu Hoang, SPE of Art Unit 3742, and 571-272-4780 for Class 009 and also accessible in the PAIR system at http://www.uspto.gov/ebc.index.html.

Petition is **granted**.

/Henry C. Yuen/

Henry C. Yuen, Special Programs Examiner
Technology Center 3700 – Mechanical Engineering,
Manufacturing and Products
571-272-4856

Doc Code: PET.GREEN
Document Description: Petition for Green Tech Pilot

PTO/SB/420 (03-11)

PETITION TO MAKE SPECIAL UNDER THE GREEN TECHNOLOGY PILOT PROGRAM

Attorney Docket Number: 250447	Application Number (if known): 13/182,183	Filing date: July 13, 2011

First Named Inventor: Robert Gregory Wagoner

Title: METHODS AND SYSTEMS FOR OPERATING POWER CONVERTERS

APPLICANT HEREBY REQUESTS TO PARTICIPATE IN THE GREEN TECHNOLOGY PILOT PROGRAM FOR THE ABOVE-IDENTIFIED APPLICATION. See Instruction Sheet on page 2.

This petition must be timely filed electronically using the USPTO electronic filing system, EFS-Web.

1. By filing this petition:

   Applicant is requesting early publication: Applicant hereby requests early publication under 37 CFR 1.219 and the publication fee set forth in 37 CFR 1.18(d) accompanies this request.

2. By filing this petition: applicant is agreeing to make an election without traverse in a telephonic interview and elect an invention that meets the eligibility requirements for the Green Technology Pilot Program, if the Office determines that the claims are not obviously directed to a single invention. See Instruction Sheet.

3. This request is accompanied by statements of special status for the eligibility requirement.

4. The application contains no more than three (3) independent claims and twenty (20) total claims.

5. The application does not contain any multiple dependent claims.

6. Other attachments: Statement Concerning the Basis for the Special Status

Signature /Allison W. Mages/	Date 10/26/11
Name (Print/Typed) Allison W. Mages	Registration Number 57,275

Note: Signatures of all the inventors or assignees of record of the entire interest or their representative(s) are required in accordance with 37 CFR 1.33 and 11.18. Please see 37 CFR 1.4(d) for the form of the signature. If necessary, submit multiple forms for more than one signature, see below.*

☐ *Total of _____ forms are submitted.

If you need assistance in completing the form, call 1-800-PTO-9199 and select option 2.

IN THE UNITED STATES PATENT AND TRADEMARK OFFICE

First Named Inventor: Robert Gregory Wagoner	)
Confirmation No.: 5847	)
	)
Serial No.: 13/182,183	)
	)
Filing Date: July 13, 2011	)
	)
Atty Docket No.: 250447	)

VIA EFS
Commissioner for Patents
P.O. Box 1450
Alexandria, VA 22313-1450

Statement Concerning the Basis for the Special Status

SIR:

The application relates generally to power converters, and more specifically, to clamp circuits for transistor switches in power converters. (See [0001]).

At least some known power converters utilize switching circuits including transistors capable of handling high currents and voltages. Rapidly switching the transistors on and off in such circuits is beneficial to the quality of the power output of the converter. Due to the charging and/or discharging of the switching circuit during transient operating conditions (i.e., while turning on and off the transistors), switching losses are induced. To reduce switching losses and improve power output, it is beneficial to maintain a relatively high voltage at collector terminals of the transistors. (See [0002]).

The methods and systems described in the application include a temperature drift resistant clamp circuit that facilitates reducing the effects of temperature on operation of a power converter switching circuit. In the exemplary embodiment, generator is configured to generate an alternating current (AC) power. In one embodiment, generator is a wind

turbine generator. Alternatively, generator is any power generating device that enables power generation system to function as described in the application. The AC power generated by generator is provided to power converter as AC input power. Power converter receives and converts AC input power to an output power 20, and output power is provided to load. Load may include, but is not limited to including, motors, power grids, and/or resistive loads. (See [0016], [0018])

Applicant respectfully submits that Special Status is sought on the basis that the present invention materially contributes to the discovery or development of renewable energy resources.

The undersigned representative may be contacted at the number below to facilitate the resolution of any matters. Please charge any fees that are incurred in connection with this Statement to deposit account no. 09-0470.

Respectfully submitted,

General Electric Company

By : /Allison W. Mages/
Allison W. Mages
Reg. No. 57,275

Dated: October 26, 2011

GE Global Patent Operation
2 Corporate Drive, Suite 648
Shelton, CT 06484
203-944-6730

UNITED STATES PATENT AND TRADEMARK OFFICE

UNITED STATES DEPARTMENT OF COMMERCE
United States Patent and Trademark Office
Address: COMMISSIONER FOR PATENTS
P.O. Box 1450
Alexandria, Virginia 22313-1450
www.uspto.gov

APPLICATION NO.	FILING DATE	FIRST NAMED INVENTOR	ATTORNEY DOCKET NO.	CONFIRMATION NO.
13/182,183	07/13/2011	Robert Gregory Wagoner	250447 (22402-276)	5847

45432 7590 11/18/2011

PATRICK W. RASCHE (22402)
ARMSTRONG TEASDALE LLP
7700 Forsyth Boulevard
Suite 1800
St. Louis, MO 63105

EXAMINER	
ART UNIT	PAPER NUMBER
2838	

NOTIFICATION DATE	DELIVERY MODE
11/18/2011	ELECTRONIC

Please find below and/or attached an Office communication concerning this application or proceeding.

The time period for reply, if any, is set in the attached communication.

Notice of the Office communication was sent electronically on above-indicated "Notification Date" to the following e-mail address(es):

uspatents@armstrongteasdale.com

UNITED STATES PATENT AND TRADEMARK OFFICE

Commissioner for Patents
United States Patent and Trademark Office
P.O. Box 1450
Alexandria, VA 22313-1450
www.uspto.gov

PATRICK W. RASCHE (22402)
ARMSTRONG TEASDALE LLP
7700 Forsyth Boulevard
Suite 1800
St. Louis MO 63105

NOV 18 2011

In re Application of	:	
WAGONER, Robert Gregory	:	DECISION ON PETITION
Application No. 13/182,183	:	TO MAKE SPECIAL UNDER
Filed: July 13, 2011	:	THE GREEN TECHNOLOGY
Attorney Docket No. 250447 (22402-276)	:	PILOT PROGRAM

This is a decision on the petition under 37 CFR 1.102, filed on October 26, 2011, to make the above-identified application special under the pilot program for applications pertaining to Green Technologies as set forth 74 Federal Register Notice 64666 (December 8, 2009) and amended by 75 Federal Register Notice 28554 (May 21, 2010) and 75 Federal Register Notice 69049 (November 10, 2010).

The petition is **DISMISSED**.

If reconsideration of this decision is desired, a petition for reconsideration must be filed within ONE (1) MONTH OR THIRTY (30) DAYS from the mail date of this decision, whichever is longer. No extension of this time limit can be granted under 37 CFR 1.136(a) or (b). The petition for reconsideration should include an exhaustive attempt to provide the lacking item(s) noted below, since, after a decision on the petition for reconsideration, no further reconsideration or review of the matter will be undertaken by the Director.

A grantable petition to make an application special under 37 CFR 1.102 and the pilot program as set forth in 74 FR 64666 must be directed to a nonprovisional application filed under 35 USC 111(a) or be a national stage entry under 35 USC 371, exclusive of any reissue applications and be filed prior to the date of the notice, December 8, 2009.

In order to qualify for special status, the following requirements must be met. 1) The application must have no more than 3 independent claims and no more than 20 total claims. 2) The application must not contain any multiple dependent claims. 3) The petition must state the basis for seeking special status, i.e., the claimed invention either: A) materially enhances the quality of the environment or B) materially contributes to: i) the discovery or development of renewable energy resources, ii) the more efficient utilization and conservation of energy resources, or iii) greenhouse gas emission reduction. 4) If the disclosure is not clear on its face that the claimed invention materially contributes under category (A) or (B), the petition must be accompanied by

a statement by the applicant, assignee, or an attorney/agent registered to practice before the Office explaining how the materiality standard is met. 5) A statement that applicant will agree to make an election without traverse in a telephonic interview if a restriction requirement is made by the examiner. 6) The petition to make special must be filed electronically. 7) The petition must be filed at least one day prior to the date that a first Office Action appears in the Patent Application Information Retrieval (PAIR) system. 8) The petition must be accompanied by a request for early publication in compliance with 37 CFR 1.219 and include the publication fee as set forth in 37 CFR 1.18(d).

The requirement for a fee for consideration of the petition to make special for applications pertaining to Green Technologies has been waived.

The petition lacks item 4.

In regard to item 4, applicant's statement pertaining to how the materiality standard is met does not satisfy the requirements for this pilot. The instant petition includes a statement identifying the basis for the special status as contributing to the development of renewable energy resources. The materiality standard does not permit an applicant to speculate as to how a hypothetical end-user might specially apply the invention in a manner that could contribute to the development of renewable resources or energy conservation. While the petition includes a statement that one embodiment of the claimed power converter can be used in a wind turbine, the claim invention is not limited as such. Any argument that the claimed invention can be used with wind turbine generators is considered speculate as to how a hypothetical end-user might specially apply the claimed invention.

Any reconsideration of this decision should be submitted through the USPTO electronic filing system, EFS-Web, and selecting the document description of "Petition for Green Tech Pilot" on the EFS-Web screen.

Telephone inquiries concerning this decision should be directed to Colleen Dunn at 571-272-1170.

The application is being forwarded to the Technology Center Art Unit for action in its regular turn.

/Colleen Dunn/

Colleen Dunn
TQAS, TC 2800

IN THE UNITED STATES PATENT AND TRADEMARK OFFICE

First Named Inventor: Robert Gregory WAGONER)
Confirmation No.: 5847)
)
Serial No.: 13/182,183)
)
Filing Date: 07-13-2011)
)
Atty Docket No.: 250447-1 (22402-276))

Commissioner for Patents
P.O. Box 1450
Alexandria, VA 22313-1450

Request for Reconsideration

SIR:

This is responsive to the Decision on Petition, dated as mailed 18 November 2011, in the above-referenced application.

Applicant respectfully requests reconsideration of Applicant's Petition to Make Special on the basis that the present invention materially contributes to the development of renewable energy resources or energy conservation.

The Decision to Make Special Under the Green Technology Pilot Program (hereinafter "the Decision") alleges that, while the petition includes a statement that one embodiment of the claimed power converter can be used in a wind turbine, the claimed invention is not limited as such. The Decision states that any argument that the claimed invention can be used with wind turbine generators is considered speculative as to how a hypothetical end-user might specially apply the claimed invention. Applicant does not agree with the comments made in the Decision.

Applicant respectfully submits that the use of the claimed invention with wind turbine generators, and thus the present invention's material contribution to

the development of renewable energy resources or energy conservation, is not merely speculative. As stated in the present application, in one embodiment, generator 14 is a wind turbine generator. (see at least paragraph [0018]). As such, Applicant respectfully submits that use of the claimed invention with a wind turbine is not a speculative use.

Applicant respectfully submits that the present invention relates generally to power converters, and more specifically, to clamp circuits for transistor switches in power converters. (see at least paragraph [0001]).

At least some known power converters utilize switching circuits including transistors capable of handling high currents and voltages. Rapidly switching the transistors on and off in such circuits is beneficial to the quality of the power output of the converter. Due to the charging and/or discharging of the switching circuit during transient operating conditions (i.e., while turning on and off the transistors), switching losses are induced. To reduce switching losses and improve power output, it is beneficial to maintain a relatively high voltage at collector terminals of the transistors. (see at least paragraph [0002]).

Transistors in at least some known power converters have operating limits, which, if exceeded, may damage the transistor and/or other components in the power converter. Accordingly, to operate transistors within an acceptable range, at least some known power converters utilize a voltage clamp circuit, such that if the voltage at the collector terminal exceeds a certain amount, the voltage clamp circuit limits a peak voltage between the collector terminal and the emitter terminal of the transistor. Due to part-to-part variation and temperature variation,

however, at least some known voltage clamp circuits have a relatively wide range of operation. That is, the precise voltage at which the voltage clamp circuit will shut off the switching circuit may vary significantly depending on the components in the voltage clamp circuit and the temperature of those components. Accordingly, in at least some known switching circuits, to avoid risking operation of the transistor above the operating limits, the switching circuit must be operated at voltage levels substantially below the operating limits, increasing turn off losses and reducing power output of the converter. (see at least paragraph [0003]).

The methods and systems described in the present application include a temperature drift resistant clamp circuit that facilitates reducing the effects of temperature on operation of a power converter switching circuit. In one embodiment, the temperature drift resistant clamp circuit includes at least one zener diode and a temperature compensation circuit. In another embodiment, the temperature drift resistant clamp circuit includes a backwards diode component and a temperature compensated voltage source. Because the effects of temperature on the switching circuit are reduced by using the temperature drift resistant clamp circuit, the switching circuit can be operated at a higher voltage, decreasing switching losses and increasing a total power output of the power converter. (see at least paragraph [0016]). As applied to a wind turbine generator, by increasing the total power output of a power converter, embodiments of the present invention promote increased production of renewable energy resources and renewable energy.

The undersigned attorney may be contacted at the number below to facilitate the resolution of any matters. Please charge any fees that are incurred in connection with this Statement to deposit account no. 09-0470.

Respectfully submitted,

General Electric Company

By : /Allison W Mages/
Allison Weiner Mages
Reg. No. 57,275

Dated: December 17, 2011

GE Global Patent Operation
2 Corporate Drive, Suite 648
Shelton, CT 06484
203-944-6730

UNITED STATES PATENT AND TRADEMARK OFFICE

UNITED STATES DEPARTMENT OF COMMERCE
United States Patent and Trademark Office
Address: COMMISSIONER FOR PATENTS
P.O. Box 1450
Alexandria, Virginia 22313-1450
www.uspto.gov

APPLICATION NO.	FILING DATE	FIRST NAMED INVENTOR	ATTORNEY DOCKET NO.	CONFIRMATION NO.
13/182,183	07/13/2011	Robert Gregory Wagoner	250447 (22402-276)	5847

45432 7590 01/31/2012

PATRICK W. RASCHE (22402)
ARMSTRONG TEASDALE LLP
7700 Forsyth Boulevard
Suite 1800
St. Louis, MO 63105

EXAMINER	
FUREMAN, JARED	

ART UNIT	PAPER NUMBER
2836	

NOTIFICATION DATE	DELIVERY MODE
01/31/2012	ELECTRONIC

Please find below and/or attached an Office communication concerning this application or proceeding.

The time period for reply, if any, is set in the attached communication.

Notice of the Office communication was sent electronically on above-indicated "Notification Date" to the following e-mail address(es):

uspatents@armstrongteasdale.com

UNITED STATES PATENT AND TRADEMARK OFFICE

Commissioner for Patents
United States Patent and Trademark Office
P.O. Box 1450
Alexandria, VA 22313-1450
www.uspto.gov

PATRICK W. RASCHE (22402)
ARMSTRONG TEASDALE LLP
7700 Forsyth Boulevard
Suite 1800
St. Louis MO 63105

JAN 3 1 2012

In re Application of	:	
Wagoner	:	DECISION ON PETITION
Application No. 13/182,183	:	TO MAKE SPECIAL UNDER
Filed: 7/13/2011	:	THE GREEN TECHNOLOGY
Attorney Docket No. **250447 (22402-276)**	:	PILOT PROGRAM

This is a decision on the request for reconsideration, filed 12/16/2011, to make the above-identified application special under the pilot program for applications pertaining to Green Technologies as set forth in 74 Federal Register Notice 64666 (December 8, 2009) and amended by 75 Federal Register Notice 28554 (May 21, 2010) and 75 Federal Register Notice 69049 (November 10, 2010).

The petition is **GRANTED**.

A grantable petition to make an application special under 37 CFR 1.102 and the pilot program as set forth in 74 FR 64666 must be directed to a nonprovisional application filed under 35 USC 111(a) or be a national stage entry under 35 USC 371, exclusive of any reissue applications.

In order to qualify for special status, the following requirements must be met. 1) The application must have no more than 3 independent claims and no more than 20 total claims. 2) The application must not contain any multiple dependent claims. 3) The petition must state the basis for seeking special status, i.e., the claimed invention either: A) materially enhances the quality of the environment or B) materially contributes to: i) the discovery or development of renewable energy resources, ii) the more efficient utilization and conservation of energy resources, or iii) greenhouse gas emission reduction. 4) If the disclosure is not clear on its face that the claimed invention materially contributes under category (A) or (B), the petition must be accompanied by a statement by the applicant, assignee, or an attorney/agent registered to practice before the Office explaining how the materiality standard is met. 5) A statement that applicant will agree to make an election without traverse in a telephonic interview if a restriction requirement is made by the examiner. 6) The petition to make special must be filed electronically. 7) The petition must be filed at least one day prior to the date that a first Office Action appears in the Patent Application Information Retrieval (PAIR) system. 8) The petition must be accompanied by a

request for early publication in compliance with 37 CFR 1.219 and include the publication fee as set forth in 37 CFR 1.18(d).

The requirement for a fee for consideration of the petition to make special for applications pertaining to Green Technologies has been waived.

The instant petition complies with items 1 – 8 above. Accordingly, the above-identified application has been accorded "special" status.

Telephone inquires concerning this decision should be directed to Tom Dunn at 571-272-1171.

The application is being forwarded to the Technology Center Art Unit 2836 for action on the merits commensurate with this decision.

/Tom Dunn/

Tom Dunn
Quality Assurance Specialist
Technology Center 1700

Doc Code: PET.GREEN
Document Description: Petition for Green Tech Pilot

PTO/SB/420 (05-10)
Approved for use through 05/31/2010. OMB 0651-0062
U.S. Patent and Trademark Office; U. S. DEPARTMENT OF COMMERCE
Under the Paperwork Reduction Act of 1995, no persons are required to respond to a collection of information unless it displays a valid OMB control number.

PETITION TO MAKE SPECIAL UNDER THE GREEN TECHNOLOGY PILOT PROGRAM

Attorney Docket Number: 1630-0975PUS1	Application Number (if known):	Filing date: JUL 13 2011
First Named Inventor: Changseo PARK		
Title: SOLAR CELL		

APPLICANT HEREBY REQUESTS TO PARTICIPATE IN THE GREEN TECHNOLOGY PILOT PROGRAM FOR THE ABOVE-IDENTIFIED APPLICATION. See Instruction Sheet on page 2.

This petition must be timely filed electronically using the USPTO electronic filing system, EFS-Web.

1. By filing this petition:

   Applicant is requesting early publication: Applicant hereby requests early publication under 37 CFR 1.219 and the publication fee set forth in 37 CFR 1.18(d) accompanies this request.

2. By filing this petition: applicant is agreeing to make an election without traverse in a telephonic interview and elect an invention that meets the eligibility requirements set forth in the notice titled "Pilot Program for Green Technologies Including Greenhouse Gas Reduction," as modified by the notice titled "Elimination of Classification Requirement in the Green Technology Pilot Program," each of which was published in the Federal Register, if the Office determines that the claims are not obviously directed to a single invention.

3. This request is accompanied by statements of special status for the eligibility requirement.

4. The application contains no more than three (3) independent claims and twenty (20) total claims.

5. The application does not contain any multiple dependent claims.

6. Other attachments: _____

Signature	Date JUL 13 2011
Name (Print/Typed) Esther H. Chong	Registration Number 40953

Note: *Signatures of all the inventors or assignees of record of the entire interest or their representative(s) are required in accordance with 37 CFR 1.33 and 11.18. Please see 37 CFR 1.4(d) for the form of the signature. If necessary, submit multiple forms for more than one signature, see below*.*

☐ *Total of _____ forms are submitted.

The information is required to obtain or retain a benefit by the public which is to file (and by the USPTO to process) an application. Confidentiality is governed by 35 U.S.C. 122 and 37 CFR 1.11 and 1.14. This collection is estimated to take 12 hours to complete, including gathering, preparing, and submitting the completed application form to the USPTO. Time will vary depending upon the individual case. Any comments on the amount of time you require to complete this form and/or suggestions for reducing this burden, should be sent to the Chief Information Officer, U.S. Patent and Trademark Office, U.S. Department of Commerce, P.O. Box 1450, Alexandria, VA 22313-1450. DO NOT SEND FEES OR COMPLETED FORMS TO THIS ADDRESS. **SEND TO: Commissioner for Patents, P.O. Box 1450, Alexandria, VA 22313-1450.**

If you need assistance in completing the form, call 1-800-PTO-9199 and select option 2.

Docket No.: 1630-0975PUS1
(Patent)

IN THE UNITED STATES PATENT AND TRADEMARK OFFICE

Patent Application of:
Changseo PARK et al.

Application No.:	NEW	Confirmation No.:	
Filed:	JUL 13 2011	Art Unit:	Not Yet Assigned
For:	SOLAR CELL	Examiner:	Not Yet Assigned

STATEMENT OF SPECIAL STATUS FOR THE ELIGIBILITY REQUIREMENT UNDER THE GREEN TECHNOLOGY PILOT PROGRAM

Commissioner for Patents
P.O. Box 1450
Alexandria, VA 22313-1450

Sir:

In support of the Petition to Make Special Under the Green Technology Pilot Program, it is respectfully submitted that the basis for the requested special status is that the invention claimed in the above-identified patent application materially contributes to the development of renewable energy sources and/or green house gas emission reduction. Specifically, the claimed invention relates to a solar cell.

Additionally, by filing this petition, the applicant agrees to make an election without traverse in a telephone interview and elect an invention that meets the eligibility requirements set for in the notice titled "Pilot Program for Green Technologies Including Greenhouse Gas Reduction," as modified by the notice titled "Elimination of Classification Requirement in the Green Technology Pilot Program," each of which was published in the Federal Register, if the Office determines that the claims are not obviously directed to a single invention.

It is also submitted that this application meets the eligibility requirements to participate in the Green Technology Pilot Program, as listed in the attached Petition to Make Special Under the Green Technology Pilot Program.

Accordingly, it is respectfully requested that the Petition be granted.

Should there be any outstanding matters that need to be resolved in the present application, the Examiner is respectfully requested to contact Seth S. Kim, Reg. No. 54,577, at the telephone number of the undersigned below to conduct an interview in an effort to expedite prosecution in connection with the present application.

If necessary, the Director is hereby authorized in this, concurrent, and future replies to charge any fees required during the pendency of the above-identified application or credit any overpayment to Deposit Account No. 02-2448.

Dated: JUL 13 2011

Respectfully submitted,

By _____

Esther H. Chong
Registration No.: 40953
BIRCH, STEWART, KOLASCH & BIRCH, LLP
8110 Gatehouse Road, Suite 100 East
P.O. Box 747
Falls Church, VA 22040-0747
703-205-8000

UNITED STATES PATENT AND TRADEMARK OFFICE

UNITED STATES DEPARTMENT OF COMMERCE
United States Patent and Trademark Office
Address: COMMISSIONER FOR PATENTS
P.O. Box 1450
Alexandria, Virginia 22313-1450
www.uspto.gov

APPLICATION NO.	FILING DATE	FIRST NAMED INVENTOR	ATTORNEY DOCKET NO.	CONFIRMATION NO.
13/182,203	07/13/2011	Changseo PARK	1630-0975PUS1	5890

2292 7590 08/22/2011
BIRCH STEWART KOLASCH & BIRCH
PO BOX 747
FALLS CHURCH, VA 22040-0747

EXAMINER	
ART UNIT	PAPER NUMBER
1725	

NOTIFICATION DATE	DELIVERY MODE
08/22/2011	ELECTRONIC

Please find below and/or attached an Office communication concerning this application or proceeding.

The time period for reply, if any, is set in the attached communication.

Notice of the Office communication was sent electronically on above-indicated "Notification Date" to the following e-mail address(es):

mailroom@bskb.com

UNITED STATES PATENT AND TRADEMARK OFFICE

Commissioner for Patents
United States Patent and Trademark Office
P.O. Box 1450
Alexandria, VA 22313-1450
www.uspto.gov

AUG 22 2011

BIRCH STEWART KOLASCH & BIRCH
PO BOX 747
FALLS CHURCH VA 22040-0747

In re Application of	:	
Changseo Park et al.	:	DECISION ON PETITION
Application No. 13/182,203	:	TO MAKE SPECIAL UNDER
Filed: July 13, 2011	:	THE GREEN TECHNOLOGY
Attorney Docket No. 1630-0975PUS1	:	PILOT PROGRAM

This is a decision on the petition under 37 CFR 1.102, filed July 13, 2011, to make the above-identified application special under the pilot program for applications pertaining to Green Technologies as set forth in 74 Federal Register Notice 64666 (December 8, 2009) and amended by 75 Federal Register Notice 28554 (May 21, 2010) and 75 Federal Register Notice 69049 (November 10, 2010).

The petition is **GRANTED**.

A grantable petition to make an application special under 37 CFR 1.102 and the pilot program as set forth in 74 FR 64666 must be directed to a nonprovisional application filed under 35 USC 111(a) or be a national stage entry under 35 USC 371, exclusive of any reissue applications.

In order to qualify for special status, the following requirements must be met. 1) The application must have no more than 3 independent claims and no more than 20 total claims. 2) The application must not contain any multiple dependent claims. 3) The petition must state the basis for seeking special status, i.e., the claimed invention either: A) materially enhances the quality of the environment or B) materially contributes to: i) the discovery or development of renewable energy resources, ii) the more efficient utilization and conservation of energy resources, or iii) greenhouse gas emission reduction. 4) If the disclosure is not clear on its face that the claimed invention materially contributes under category (A) or (B), the petition must be accompanied by a statement by the applicant, assignee, or an attorney/agent registered to practice before the Office explaining how the materiality standard is met. 5) A statement that applicant will agree to make an election without traverse in a telephonic interview if a restriction requirement is made by the examiner. 6) The petition to make special must be filed electronically. 7) The petition must be filed at least one day prior to the date that a first Office Action appears in the Patent Application Information Retrieval (PAIR) system. 8) The petition must be accompanied by a request for early publication in compliance with 37 CFR 1.219 and include the publication fee as set forth in 37 CFR 1.18(d).

The requirement for a fee for consideration of the petition to make special for applications pertaining to Green Technologies has been waived.

The instant petition complies with items 1 – 8 above. Accordingly, the above-identified application has been accorded "special" status.

Telephone inquires concerning this decision should be directed to Blaine Copenheaver at 571-272-1156.

The application is being forwarded to the examiner for action on the merits commensurate with this decision.

/Blaine Copenheaver/

Blaine Copenheaver
Quality Assurance Specialist
Technology Center 1700

UNITED STATES PATENT AND TRADEMARK OFFICE

UNITED STATES DEPARTMENT OF COMMERCE
United States Patent and Trademark Office
Address: COMMISSIONER FOR PATENTS
P.O. Box 1450
Alexandria, Virginia 22313-1450
www.uspto.gov

APPLICATION NO.	FILING DATE	FIRST NAMED INVENTOR	ATTORNEY DOCKET NO.	CONFIRMATION NO.
13/182,274	07/13/2011	Weihua HU	HW708654	6028

77399 7590 09/02/2011

Leydig, Voit & Mayer, Ltd
(for Huawei Technologies Co., Ltd)
Two Prudential Plaza Suite 4900
180 North Stetson Avenue
Chicago, IL 60601

EXAMINER
YAO, KWANG BIN

ART UNIT	PAPER NUMBER
2473	

NOTIFICATION DATE	DELIVERY MODE
09/02/2011	ELECTRONIC

Please find below and/or attached an Office communication concerning this application or proceeding.

The time period for reply, if any, is set in the attached communication.

Notice of the Office communication was sent electronically on above-indicated "Notification Date" to the following e-mail address(es):

Chgpatent@leydig.com
uspatent@huawei.com

UNITED STATES PATENT AND TRADEMARK OFFICE

Commissioner for Patents
United States Patent and Trademark Office
P.O. Box 1450
Alexandria, VA 22313-1450
www.uspto.gov

Leydig, Voit & Mayer, Ltd
(for Huawei Technologies Co., Ltd)
Two Prudential Plaza Suite 4900
180 North Stetson Avenue
Chicago IL 60601

MAILED

SEP 02 2011

DIRECTOR OFFICE
TECHNOLOGY CENTER 2400

In re Application of:
HU, WEIHUA et al.
Serial No.: 13/182274
Filed: July 13, 2011
Docket: HW708654
Title: RESOURCE RELEASE CONTROL METHOD, COMMUNICATION SYSTEM AND DEVICE

DECISION ON PETITION TO MAKE SPECIAL FOR NEW APPLICATION UNDER 37 C.F.R. § 1.102

This is a decision on the petition filed on July 13, 2011, to make the above-identified application special for accelerated examination procedure in accordance with 37 C.F.R. § 1.102(c)(2).

The petition to make the application special is GRANTED.

The application is eligible for accelerated examination and the petition complies with the conditions for granting the application special status pursuant to M.P.E.P. §708.02(a) and to the "Change to Practice for Petitions in Patent Applications to Make Special and for Accelerated Examination" published June 26, 2006, in the Federal Register. (71 Fed. Reg. 36323).

The prosecution of the instant application will be conducted expeditiously according to the following guidelines.

1. The application will be docketed to an examiner and taken up for action within two weeks of the date of this decision.

2. Restriction Practice:
If the examiner determines that the claims are not directed to a single invention, a telephone request to elect one single invention will be made pursuant to M.P.E.P. §812.01. As a prerequisite to the grant of this petition, the applicant has agreed to make an oral election, by telephone, without traverse. If the applicant refuses to make an election without traverse, or the examiner cannot reach the applicant after a reasonable effort, the examiner will treat the first claimed invention (invention defined by claim 1) as having being constructively elected without traverse for examination.

3. Office action:
   If it is determined that, after appropriate consultation, there is a potential rejection or any other issue to be addressed, the examiner will telephone the applicant and arrange an interview to discuss and resolve the issue. An Office action, other than a Notice of Allowance and Fee(s) Due (Notice of Allowance), will not be issued unless either: 1) an interview was conducted but did not result in agreed to action that places the application in condition for allowance, or, 2) a determination is made that an interview would be unlikely to result in the application being placed in condition for allowance, and 3) an internal conference has been held to review any rejection of any claim.

4. Time for Reply:
   An Office action other than a Notice of Allowance or a final Office action will set a shortened statutory period of one month or thirty days, whichever is longer, for reply with no extension of time available under 37 C.F.R. §1.136(a). Failure to timely file a reply within this non-extendible period for reply will result in the abandonment of the application.

5. Reply by Applicant:
   A timely reply to an Office action other than the Notice of Allowance must be submitted electronically via EFS or EFS-web and limited to addressing the rejections, objections and requirement made. Any amendment that attempts to: 1) add claims which would result in more than three pending independent claims or more than twenty pending total claims; 2) present claims not encompassed by the pre-examination search or an updated accelerated examination support document; or 3) present claims that are directed a non-elected invention or an invention other than that previously claimed and examined in the application, will be treated as not fully responsive and will not be entered.

   For any amendment to the claims (including any new claim) that is not encompassed by the accelerated examination support document, applicant must provide an updated accelerated examination support document that encompasses the amended or new claims at the time of filing of the amendment.

   To proceed expeditiously with the examination, it is recommended that a reply with amendments made to any claim or with any new claim being added be accompanied by an updated accelerated examination support document or a statement explaining how the amended or new claim is supported by the original accelerated examination support document.

6. Information Disclosure Statement (IDS):
   Any IDS filed during prosecution must be submitted electronically via EFS or EFS-web, accompanied by an updated accelerated examination support document, and be in compliance with 37 C.F.R. §1.97 and §1.98.

7. Post-Allowance Processing:

To expedite processing of the allowed application into a patent, the applicant must: 1) pay the required fees within one month of the date of the Notice of Allowance, and 2) not file any post allowance papers not required by the Office. In no event may the issue fee be paid and accepted later than three months from the date of the Notice of Allowance.

8. After-Final and Appeal Procedures:
   To expedite prosecution, after receiving the final Office action, applicant must: 1) promptly file a notice of appeal, an appeal brief and appeal fees; and 2) not request a pre-appeal brief conference.

   Any amendment, affidavit or other evidence filed after final Office action must comply with applicable rules and the requirements outlined in numbered paragraphs 5 and 6 above.

   On appeal, the application will proceed according to normal appeal procedures. After appeal, the application will again be treated special.

9. Proceedings Outside the Normal Examination Process:
   If the application becomes involved in a proceeding that is outside the normal examination process (e.g., a secrecy order, national security review, interference proceeding, petitions under 37 C.F.R. §1.181, §1.182 or §1.183), the application will be treated special before and after such proceeding.

10. Final Disposition:
    The twelve-month goal of this accelerated examination procedure ends with a final disposition. The mailing of a final Office action, a Notice of Allowance, the filing of a Notice of Appeal, or the filing of a Request for Continued Examination (RCE) is the final disposition. However, the application retains its special status after the filing of an RCE.

If, during prosecution, a paper is not filed electronically using EFS-web, a reply is filed but is not fully responsive, the application is involved in an appeal or a proceeding outside normal examination process, the application will still be examined expeditiously, however, the final disposition may occur more than twelve months from the filing of the application.

Any inquiry regarding this decision should be directed to the undersigned at (571) 272-3126.

Chau T. Nguyen
Quality Assurance Specialist
Technology Center 2400
Network, Multiplexing, Cable and Security

Doc Code: PET.GREEN
Document Description: Petition for Green Tech Pilot

PTO/SB/420 (03-11)

PETITION TO MAKE SPECIAL UNDER THE GREEN TECHNOLOGY PILOT PROGRAM

Attorney Docket Number: 27946-19180	Application Number (if known):	Filing date: July 13, 2011

First Named Inventor: Salomon Trujillo

Title: Robotic Heliostat System and Method of Operation

APPLICANT HEREBY REQUESTS TO PARTICIPATE IN THE GREEN TECHNOLOGY PILOT PROGRAM FOR THE ABOVE-IDENTIFIED APPLICATION. See Instruction Sheet on page 2.

This petition must be timely filed electronically using the USPTO electronic filing system, EFS-Web.

1. By filing this petition:

   Applicant is requesting early publication: Applicant hereby requests early publication under 37 CFR 1.219 and the publication fee set forth in 37 CFR 1.18(d) accompanies this request.

2. By filing this petition: applicant is agreeing to make an election without traverse in a telephonic interview and elect an invention that meets the eligibility requirements for the Green Technology Pilot Program, if the Office determines that the claims are not obviously directed to a single invention. See Instruction Sheet.

3. This request is accompanied by statements of special status for the eligibility requirement.

4. The application contains no more than three (3) independent claims and twenty (20) total claims.

5. The application does not contain any multiple dependent claims.

6. Other attachments: _____

Signature /John T. McNelis/	Date 13 July 2011
Name (Print/Typed) John T. McNelis	Registration Number 37186

Note: *Signatures of all the inventors or assignees of record of the entire interest or their representative(s) are required in accordance with 37 CFR 1.33 and 11.18. Please see 37 CFR 1.4(d) for the form of the signature. If necessary, submit multiple forms for more than one signature, see below*.*

■ *Total of one forms are submitted.

If you need assistance in completing the form, call 1-800-PTO-9199 and select option 2.

Instruction Sheet for
Petition to Make Special Under the Green Technology Pilot Program

(Not to be Submitted to the USPTO)

The following is a summary of the requirements (for more information see the notices (i) "Pilot Program for Green Technologies Including Greenhouse Gas Reduction," (ii) "Elimination of Classification Requirement in the Green Technology Pilot Program," and (iii) "Expansion and Extension of the Green Technology Pilot Program," available on the USPTO web site at http://www.uspto.gov/patents/init_events/green_tech.jsp):

(1) The application must be a non-reissue, non-provisional utility application filed under 35 U.S.C. 111(a), or an international application that has entered the national stage in compliance with 35 U.S.C. 371, irrespective of the filing date of the application. Reexamination proceedings are excluded from this pilot program.

(2) The application must contain three or fewer independent claims and twenty or fewer total claims. The application must not contain any multiple dependent claims. For an application that contains more than three independent claims or twenty total claims, or multiple dependent claims, applicant must file a preliminary amendment in compliance with 37 CFR 1.121 to cancel the excess claims and/or the multiple dependent claims at the time the petition to make special is filed.

(3) The claims must be directed to a single invention that materially enhances the quality of the environment, or that materially contributes to: (1) the discovery or development of renewable energy resources; (2) the more efficient utilization and conservation of energy resources; or (3) green house gas emission reduction (see the eligibility requirements of sections II and III of the notice (i) cited above). The petition must include a statement that, if the USPTO determines that the claims are directed to multiple inventions (e.g., in a restriction requirement), applicant will agree to make an election without traverse in a telephonic interview, and elect an invention that meets the eligibility requirements in section II or III of the notice (i) cited above.

(4) The petition to make special must be timely filed electronically using the USPTO electronic filing system, EFS-Web, and selecting the document description of "Petition for Green Tech Pilot" on the EFS-Web screen. Applicant should use form PTO/SB/420, which is available as a Portable Document Format (PDF) fillable form in EFS-Web and on the USPTO Web site.

(5) The petition to make special must be filed at least one day prior to the date that a first Office action (which may be an Office action containing only a restriction requirement) appears in the Patent Application Information Retrieval (PAIR) system. Applicant may check the status of the application using PAIR.

(6) The petition to make special must be accompanied by a request for early publication in compliance with 37 CFR 1.219 and the publication fee set forth in 37 CFR 1.18(d).

Privacy Act Statement

The **Privacy Act of 1974 (P.L. 93-579)** requires that you be given certain information in connection with your submission of the attached form related to a patent application or patent. Accordingly, pursuant to the requirements of the Act, please be advised that: (1) the general authority for the collection of this information is 35 U.S.C. 2(b)(2); (2) furnishing of the information solicited is voluntary; and (3) the principal purpose for which the information is used by the U.S. Patent and Trademark Office is to process and/or examine your submission related to a patent application or patent. If you do not furnish the requested information, the U.S. Patent and Trademark Office may not be able to process and/or examine your submission, which may result in termination of proceedings or abandonment of the application or expiration of the patent.

The information provided by you in this form will be subject to the following routine uses:

1. The information on this form will be treated confidentially to the extent allowed under the Freedom of Information Act (5 U.S.C. 552) and the Privacy Act (5 U.S.C 552a). Records from this system of records may be disclosed to the Department of Justice to determine whether disclosure of these records is required by the Freedom of Information Act.
2. A record from this system of records may be disclosed, as a routine use, in the course of presenting evidence to a court, magistrate, or administrative tribunal, including disclosures to opposing counsel in the course of settlement negotiations.
3. A record in this system of records may be disclosed, as a routine use, to a Member of Congress submitting a request involving an individual, to whom the record pertains, when the individual has requested assistance from the Member with respect to the subject matter of the record.
4. A record in this system of records may be disclosed, as a routine use, to a contractor of the Agency having need for the information in order to perform a contract. Recipients of information shall be required to comply with the requirements of the Privacy Act of 1974, as amended, pursuant to 5 U.S.C. 552a(m).
5. A record related to an International Application filed under the Patent Cooperation Treaty in this system of records may be disclosed, as a routine use, to the International Bureau of the World Intellectual Property Organization, pursuant to the Patent Cooperation Treaty.
6. A record in this system of records may be disclosed, as a routine use, to another federal agency for purposes of National Security review (35 U.S.C. 181) and for review pursuant to the Atomic Energy Act (42 U.S.C. 218(c)).
7. A record from this system of records may be disclosed, as a routine use, to the Administrator, General Services, or his/her designee, during an inspection of records conducted by GSA as part of that agency's responsibility to recommend improvements in records management practices and programs, under authority of 44 U.S.C. 2904 and 2906. Such disclosure shall be made in accordance with the GSA regulations governing inspection of records for this purpose, and any other relevant (*i.e.*, GSA or Commerce) directive. Such disclosure shall not be used to make determinations about individuals.
8. A record from this system of records may be disclosed, as a routine use, to the public after either publication of the application pursuant to 35 U.S.C. 122(b) or issuance of a patent pursuant to 35 U.S.C. 151. Further, a record may be disclosed, subject to the limitations of 37 CFR 1.14, as a routine use, to the public if the record was filed in an application which became abandoned or in which the proceedings were terminated and which application is referenced by either a published application, an application open to public inspection or an issued patent.
9. A record from this system of records may be disclosed, as a routine use, to a Federal, State, or local law enforcement agency, if the USPTO becomes aware of a violation or potential violation of law or regulation.

Doc Code: PET.GREEN
Document Description: Petition for Green Tech Pilot

PTO/SB/420 (05-10)
Approved for use through 05/31/2010. OMB 0651-0062
U.S. Patent and Trademark Office; U. S. DEPARTMENT OF COMMERCE
Under the Paperwork Reduction Act of 1995, no persons are required to respond to a collection of information unless it displays a valid OMB control number.

PETITION TO MAKE SPECIAL UNDER THE GREEN TECHNOLOGY PILOT PROGRAM

Attorney Docket Number: 1630-0936PUS1	Application Number (if known):	Filing date: JUL 13 2011
First Named Inventor: Jongkyoung HONG		
Title: SOLAR CELL PANEL		

APPLICANT HEREBY REQUESTS TO PARTICIPATE IN THE GREEN TECHNOLOGY PILOT PROGRAM FOR THE ABOVE-IDENTIFIED APPLICATION. See Instruction Sheet on page 2.

This petition must be timely filed electronically using the USPTO electronic filing system, EFS-Web.

1. By filing this petition:

   Applicant is requesting early publication: Applicant hereby requests early publication under 37 CFR 1.219 and the publication fee set forth in 37 CFR 1.18(d) accompanies this request.

2. By filing this petition: applicant is agreeing to make an election without traverse in a telephonic interview and elect an invention that meets the eligibility requirements set forth in the notice titled "Pilot Program for Green Technologies Including Greenhouse Gas Reduction," as modified by the notice titled "Elimination of Classification Requirement in the Green Technology Pilot Program," each of which was published in the Federal Register, if the Office determines that the claims are not obviously directed to a single invention.

3. This request is accompanied by statements of special status for the eligibility requirement.

4. The application contains no more than three (3) independent claims and twenty (20) total claims.

5. The application does not contain any multiple dependent claims.

6. Other attachments: _____

Signature	Date JUL 13 2011
Name (Print/Typed) Esther H. Chong	Registration Number 40953

Note: *Signatures of all the inventors or assignees of record of the entire interest or their representative(s) are required in accordance with 37 CFR 1.33 and 11.18. Please see 37 CFR 1.4(d) for the form of the signature. If necessary, submit multiple forms for more than one signature, see below*.*

☐ *Total of _____ forms are submitted.

The information is required to obtain or retain a benefit by the public which is to file (and by the USPTO to process) an application. Confidentiality is governed by 35 U.S.C. 122 and 37 CFR 1.11 and 1.14. This collection is estimated to take 12 hours to complete, including gathering, preparing, and submitting the completed application form to the USPTO. Time will vary depending upon the individual case. Any comments on the amount of time you require to complete this form and/or suggestions for reducing this burden, should be sent to the Chief Information Officer, U.S. Patent and Trademark Office, U.S. Department of Commerce, P.O. Box 1450, Alexandria, VA 22313-1450. DO NOT SEND FEES OR COMPLETED FORMS TO THIS ADDRESS. **SEND TO: Commissioner for Patents, P.O. Box 1450, Alexandria, VA 22313-1450.**

If you need assistance in completing the form, call 1-800-PTO-9199 and select option 2.

4

Docket No.: 1630-0936PUS1
(Patent)

IN THE UNITED STATES PATENT AND TRADEMARK OFFICE

Patent Application of:
Jongkyoung HONG et al.

Application No.:	NEW	Confirmation No.:	
Filed:	JUL 13 2011	Art Unit:	Not Yet Assigned
For:	SOLAR CELL PANEL	Examiner:	Not Yet Assigned

STATEMENT OF SPECIAL STATUS FOR THE ELIGIBILITY REQUIREMENT UNDER THE GREEN TECHNOLOGY PILOT PROGRAM

Commissioner for Patents
P.O. Box 1450
Alexandria, VA 22313-1450

Sir:

In support of the Petition to Make Special Under the Green Technology Pilot Program, it is respectfully submitted that the basis for the requested special status is that the invention claimed in the above-identified patent application materially contributes to the development of renewable energy sources and/or green house gas emission reduction. Specifically, the claimed invention relates to a solar cell.

Additionally, by filing this petition, the applicant agrees to make an election without traverse in a telephone interview and elect an invention that meets the eligibility requirements set for in the notice titled "Pilot Program for Green Technologies Including Greenhouse Gas Reduction," as modified by the notice titled "Elimination of Classification Requirement in the Green Technology Pilot Program," each of which was published in the Federal Register, if the Office determines that the claims are not obviously directed to a single invention.

It is also submitted that this application meets the eligibility requirements to participate in the Green Technology Pilot Program, as listed in the attached Petition to Make Special Under the Green Technology Pilot Program.

Accordingly, it is respectfully requested that the Petition be granted.

Should there be any outstanding matters that need to be resolved in the present application, the Examiner is respectfully requested to contact Seth S. Kim, Reg. No. 54,577, at the telephone number of the undersigned below to conduct an interview in an effort to expedite prosecution in connection with the present application.

If necessary, the Director is hereby authorized in this, concurrent, and future replies to charge any fees required during the pendency of the above-identified application or credit any overpayment to Deposit Account No. 02-2448.

Dated: JUL 13 2011

Respectfully submitted,

By _____

Esther H. Chong
Registration No.: 40953
BIRCH, STEWART, KOLASCH & BIRCH, LLP
8110 Gatehouse Road, Suite 100 East
P.O. Box 747
Falls Church, VA 22040-0747
703-205-8000

UNITED STATES PATENT AND TRADEMARK OFFICE

UNITED STATES DEPARTMENT OF COMMERCE
United States Patent and Trademark Office
Address: COMMISSIONER FOR PATENTS
P.O. Box 1450
Alexandria, Virginia 22313-1450
www.uspto.gov

APPLICATION NO.	FILING DATE	FIRST NAMED INVENTOR	ATTORNEY DOCKET NO.	CONFIRMATION NO.
13/182,337	07/13/2011	Jongkyoung HONG	1630-0936PUS1	6169

2292 7590 08/22/2011
BIRCH STEWART KOLASCH & BIRCH
PO BOX 747
FALLS CHURCH, VA 22040-0747

EXAMINER	
ART UNIT	PAPER NUMBER
1725	

NOTIFICATION DATE	DELIVERY MODE
08/22/2011	ELECTRONIC

Please find below and/or attached an Office communication concerning this application or proceeding.

The time period for reply, if any, is set in the attached communication.

Notice of the Office communication was sent electronically on above-indicated "Notification Date" to the following e-mail address(es):

mailroom@bskb.com

UNITED STATES PATENT AND TRADEMARK OFFICE

Commissioner for Patents
United States Patent and Trademark Office
P.O. Box 1450
Alexandria, VA 22313-1450
www.uspto.gov

AUG 2 2 2011

BIRCH STEWART KOLASCH & BIRCH
PO BOX 747
FALLS CHURCH VA 22040-0747

In re Application of	:	
Jongkyoung Hong et al.	:	DECISION ON PETITION
Application No. 13/182,337	:	TO MAKE SPECIAL UNDER
Filed: July 13, 2011	:	THE GREEN TECHNOLOGY
Attorney Docket No. 1630-0936PUS1	:	PILOT PROGRAM

This is a decision on the petition under 37 CFR 1.102, filed July 13, 2011, to make the above-identified application special under the pilot program for applications pertaining to Green Technologies as set forth in 74 Federal Register Notice 64666 (December 8, 2009) and amended by 75 Federal Register Notice 28554 (May 21, 2010) and 75 Federal Register Notice 69049 (November 10, 2010).

The petition is **GRANTED**.

A grantable petition to make an application special under 37 CFR 1.102 and the pilot program as set forth in 74 FR 64666 must be directed to a nonprovisional application filed under 35 USC 111(a) or be a national stage entry under 35 USC 371, exclusive of any reissue applications.

In order to qualify for special status, the following requirements must be met. 1) The application must have no more than 3 independent claims and no more than 20 total claims. 2) The application must not contain any multiple dependent claims. 3) The petition must state the basis for seeking special status, i.e., the claimed invention either: A) materially enhances the quality of the environment or B) materially contributes to: i) the discovery or development of renewable energy resources, ii) the more efficient utilization and conservation of energy resources, or iii) greenhouse gas emission reduction. 4) If the disclosure is not clear on its face that the claimed invention materially contributes under category (A) or (B), the petition must be accompanied by a statement by the applicant, assignee, or an attorney/agent registered to practice before the Office explaining how the materiality standard is met. 5) A statement that applicant will agree to make an election without traverse in a telephonic interview if a restriction requirement is made by the examiner. 6) The petition to make special must be filed electronically. 7) The petition must be filed at least one day prior to the date that a first Office Action appears in the Patent Application Information Retrieval (PAIR) system. 8) The petition must be accompanied by a request for early publication in compliance with 37 CFR 1.219 and include the publication fee as set forth in 37 CFR 1.18(d).

The requirement for a fee for consideration of the petition to make special for applications pertaining to Green Technologies has been waived.

The instant petition complies with items 1 – 8 above. Accordingly, the above-identified application has been accorded "special" status.

Telephone inquires concerning this decision should be directed to Blaine Copenheaver at 571-272-1156.

The application is being forwarded to the examiner for action on the merits commensurate with this decision.

/Blaine Copenheaver/

Blaine Copenheaver
Quality Assurance Specialist
Technology Center 1700

Doc Code: PET.GREEN
Document Description: Petition for Green Tech Pilot

PTO/SB/420 (11-10)
Approved for use through 01/31/2011. OMB 0651-0062
U.S. Patent and Trademark Office; U. S. DEPARTMENT OF COMMERCE
Under the Paperwork Reduction Act of 1995, no persons are required to respond to a collection of information unless it displays a valid OMB control number.

PETITION TO MAKE SPECIAL UNDER THE GREEN TECHNOLOGY PILOT PROGRAM

Attorney Docket Number: 83188878	Application Number (if known): 13/182,372	Filing date: July 13, 2011
First Named Inventor: Joseph Norman Ulrey		
Title: METHOD AND SYSTEM FOR A TURBOCHARGED ENGINE		

APPLICANT HEREBY REQUESTS TO PARTICIPATE IN THE GREEN TECHNOLOGY PILOT PROGRAM FOR THE ABOVE-IDENTIFIED APPLICATION. **See Instruction Sheet on page 2.**

This petition must be timely filed electronically using the USPTO electronic filing system, EFS-Web.

1. By filing this petition:

   Applicant is requesting early publication: Applicant hereby requests early publication under 37 CFR 1.219 and the publication fee set forth in 37 CFR 1.18(d) accompanies this request.

2. By filing this petition: applicant is agreeing to make an election without traverse in a telephonic interview and elect an invention that meets the eligibility requirements for the Green Technology Pilot Program, if the Office determines that the claims are not obviously directed to a single invention. See Instruction Sheet.

3. This request is accompanied by statements of special status for the eligibility requirement.

4. The application contains no more than three (3) independent claims and twenty (20) total claims.

5. The application does not contain any multiple dependent claims.

6. Other attachments: _____

Signature /John D. Russell/	Date September 16, 2011
Name (Print/Typed) John D. Russell	Registration Number 47,048

Note: Signatures of all the inventors or assignees of record of the entire interest or their representative(s) are required in accordance with 37 CFR 1.33 and 11.18. Please see 37 CFR 1.4(d) for the form of the signature. If necessary, submit multiple forms for more than one signature, see below.*

[X] *Total of 1 forms are submitted.

The information is required to obtain or retain a benefit by the public which is to file (and by the USPTO to process) an application. Confidentiality is governed by 35 U.S.C. 122 and 37 CFR 1.11 and 1.14. This collection is estimated to take 12 hours to complete, including gathering, preparing, and submitting the completed application form to the USPTO. Time will vary depending upon the individual case. Any comments on the amount of time you require to complete this form and/or suggestions for reducing this burden, should be sent to the Chief Information Officer, U.S. Patent and Trademark Office, U.S. Department of Commerce, P.O. Box 1450, Alexandria, VA 22313-1450. DO NOT SEND FEES OR COMPLETED FORMS TO THIS ADDRESS. **SEND TO: Commissioner for Patents, P.O. Box 1450, Alexandria, VA 22313-1450.**

If you need assistance in completing the form, call 1-800-PTO-9199 and select option 2.

IN THE UNITED STATES PATENT AND TRADEMARK OFFICE

Applicants	:	Joseph Norman Ulrey, et al.
Application No.	:	13/182,372
Filed	:	July 13, 2011
Title	:	Method and System for a Turbocharged Engine
Group Art Unit	:	3747
Confirmation No.	:	6251
Docket No.	:	83188878

Commissioner for Patents
P.O. Box 1450
Alexandria, VA 22313-1450

CERTIFICATE OF TRANSMISSION

I hereby certify that this correspondence is being transmitted via the U.S. Patent and Trademark Office electronic filing system (EFS-Web) to the USPTO on:

September 16, 2011	/Angie C. Farr/
Date	Angie C. Farr

STATEMENTS OF SPECIAL STATUS

Applicants respectfully request consideration of the following statement concerning the basis for the special status as well as the following statement pertaining to the materiality standard.

I. Statement concerning the basis for special status.

Applicants submit that special status is sought on the following bases: (1) the claimed invention materially contributes to the more efficient utilization and conservation of energy resources; and/or (2) the claimed invention materially contributes to greenhouse gas emission reduction.

II. Statement pertaining to the materiality standard.

As a preliminary matter, Applicants note that the following statement refers explicitly to the elements of independent claim 1, which is the broadest claim in many respects.

Regarding basis (1), Applicants submit that the claimed invention materially contributes to the more efficient utilization and conservation of energy resources by improving fuel economy (*i.e.*, more efficiently utilizing and conserving fossil fuels).

Specifically, the claimed invention improves thermal efficiency of a turbocharged engine, thus improving fuel economy. As explained in the Background and Summary of the subject application, engine systems may be configured with exhaust gas recirculation (EGR) systems wherein at least a portion of the exhaust gas is recirculated to the engine intake. Such EGR systems enable reduction in exhaust emissions while also improving fuel economy, especially at higher levels of engine boost.

In engines that utilize self-ignition, the EGR and boosted fresh air may be provided via separate inlet ports to increase charge stratification and improve self-ignition. However, under some circumstances, a homogenous charge may increase engine performance and improve EGR benefits. The claimed invention addresses this issue by providing a method for boosting an engine using a separate intake passage for EGR and boosted fresh air.

For example, claim 1 recites:

> A method of operating a boosted engine, comprising:
> drawing at least some recirculated exhaust gas at or below barometric pressure from one of two exhaust passages into an engine cylinder through a first intake passage; and
> drawing at least some fresh air at compressor pressure into the cylinder through a second, separate intake passage coupled to the other of the two exhaust passages.

In this way, a stratified aircharge may be delivered to the cylinder but may be homogeneously mixed with fuel in the cylinder prior to combustion. By not expending compressor work on delivering EGR, turbocharger efficiency can be improved. Further, by mixing the delivered LP-EGR with the delivered boosted fresh air in the cylinder, and not before, dilution of the boosted intake air with EGR in the intake passage may be reduced. By separating EGR delivery from boost delivery, delays in turbocharger control as well as EGR control, in particular during transients, can also be reduced. As such, the separate intake passages also enable the use of a smaller turbocharger to provide the desired boost without compromising boosting efficiency. Overall, engine efficiency and performance is improved, thus improving fuel economy.

Regarding basis (2), Applicants submit that the claimed invention materially contributes to greenhouse gas emission reduction as follows. CO_2 is a greenhouse gas produced during fossil fuel combustion. As explained above and set forth in claim 1, the

claimed invention improves fuel economy by increasing engine efficiency, thus reducing the amount of fossil fuels combusted and lowering CO_2 emissions.

Please charge any cost incurred in this filing, along with any other costs, to Deposit Account No. 06-1510.

Respectfully submitted,

ALLEMAN HALL MCCOY RUSSELL & TUTTLE LLP

/John D. Russell/
John D. Russell
Registration No. 47,048
Customer No. 36865
Attorney/Agent for Applicants/Assignee
806 S.W. Broadway, Suite 600
Portland, Oregon 97205
Telephone: (503) 459-4141
Facsimile: (503) 459-4142

UNITED STATES PATENT AND TRADEMARK OFFICE

UNITED STATES DEPARTMENT OF COMMERCE
United States Patent and Trademark Office
Address: COMMISSIONER FOR PATENTS
P.O. Box 1450
Alexandria, Virginia 22313-1450
www.uspto.gov

APPLICATION NO.	FILING DATE	FIRST NAMED INVENTOR	ATTORNEY DOCKET NO.	CONFIRMATION NO.
13/182,372	07/13/2011	Joseph Norman Ulrey	83188878	6251

36865 7590 09/22/2011

ALLEMAN HALL MCCOY RUSSELL & TUTTLE, LLP
806 S.W. BROADWAY, SUITE 600
PORTLAND, OR 97205

EXAMINER	
ART UNIT	PAPER NUMBER
3748	

MAIL DATE	DELIVERY MODE
09/22/2011	PAPER

Please find below and/or attached an Office communication concerning this application or proceeding.

The time period for reply, if any, is set in the attached communication.

UNITED STATES PATENT AND TRADEMARK OFFICE

Commissioner for Patents
United States Patent and Trademark Office
P.O. Box 1450
Alexandria, VA 22313-1450
www.uspto.gov

ALLEMAN HALL MCCOY RUSSELL & TUTTLE, LLP
806 S.W. BROADWAY, SUITE 600
PORTLAND OR 97205

In re Application of	:	
ULREY, JOSEPH NORMAN , et al	:	DECISION ON PETITION
Application No. 13/182,372	:	TO MAKE SPECIAL UNDER
Filed: July 13, 2011	:	THE GREEN TECHNOLOGY
Attorney Docket No. **83188878**	:	PILOT PROGRAM

This is a decision on the renewed petition under 37 CFR 1.102, filed September 16, 2011 to make the above-identified application special under the pilot program for applications pertaining to Green Technologies as set forth in 74 Federal Register Notice 64666 (December 8, 2009) and amended by 75 Federal Register Notice 28554 (May 21, 2010) and 75 Federal Register Notice 69049 (November 10, 2010).

The petition is **granted.**

A grantable petition to make an application special under 37 CFR 1.102 and the pilot program as set forth in 74 FR 64666 must be directed to a nonprovisional application filed under 35 USC 111(a) or be a national stage entry under 35 USC 371, exclusive of any reissue applications.

In order to qualify for special status, the following requirements must be met. 1) The application must have no more than 3 independent claims and no more than 20 total claims. 2) The application must not contain any multiple dependent claims. 3) The petition must state the basis for seeking special status, i.e., the claimed invention either: A) materially enhances the quality of the environment or B) materially contributes to: i) the discovery or development of renewable energy resources, ii) the more efficient utilization and conservation of energy resources, or iii) greenhouse gas emission reduction. 4) If the disclosure is not clear on its face that the claimed invention materially contributes under category (A) or (B), the petition must be accompanied by a statement by the applicant, assignee, or an attorney/agent registered to practice before the Office explaining how the materiality standard is met. 5) A statement that applicant will agree to make an election without traverse in a telephonic interview if a restriction requirement is made by the examiner. 6) The petition to make special must be filed electronically. 7) The petition must be filed at least one day prior to the date that a first Office Action appears in the Patent Application Information Retrieval (PAIR) system. 8) The petition must be accompanied by a request for early publication in compliance with 37 CFR 1.219 and include the publication fee as set forth in 37 CFR 1.18(d).

The requirement for a fee for consideration of the petition to make special for applications pertaining to Green Technologies has been waived.

The instant petition complies with items 1 – 8 above. Accordingly, the above-identified application has been accorded "special" status.

Telephone inquires concerning this decision should be directed to Henry C. Yuen at 571-272-4856.

This application will be forwarded to the Technology Center Art Unit 3748 for action on the merits commensurate with this decision.

/Henry C. Yuen/

Henry C. Yuen
Quality Assurance Specialist
Technology Center TC 3700

Doc Code: PET.GREEN
Document Description: Petition for Green Tech Pilot

PTO/SB/420 (11-10)
Approved for use through 01/31/2011. OMB 0651-0062
U.S. Patent and Trademark Office; U. S. DEPARTMENT OF COMMERCE
Under the Paperwork Reduction Act of 1995, no persons are required to respond to a collection of information unless it displays a valid OMB control number.

PETITION TO MAKE SPECIAL UNDER THE GREEN TECHNOLOGY PILOT PROGRAM

Attorney Docket Number: 83199098	Application Number (if known): 13/182,375	Filing date: July 13, 2011
First Named Inventor: Ross Dykstra Pursifull		
Title: METHOD AND SYSTEM FOR A TURBOCHRAGED ENGINE		

APPLICANT HEREBY REQUESTS TO PARTICIPATE IN THE GREEN TECHNOLOGY PILOT PROGRAM FOR THE ABOVE-IDENTIFIED APPLICATION. See Instruction Sheet on page 2.

This petition must be timely filed electronically using the USPTO electronic filing system, EFS-Web.

1. By filing this petition:

   Applicant is requesting early publication: Applicant hereby requests early publication under 37 CFR 1.219 and the publication fee set forth in 37 CFR 1.18(d) accompanies this request.

2. By filing this petition: applicant is agreeing to make an election without traverse in a telephonic interview and elect an invention that meets the eligibility requirements for the Green Technology Pilot Program, if the Office determines that the claims are not obviously directed to a single invention. See Instruction Sheet.

3. This request is accompanied by statements of special status for the eligibility requirement.

4. The application contains no more than three (3) independent claims and twenty (20) total claims.

5. The application does not contain any multiple dependent claims.

6. Other attachments: Preliminary Amendment

Signature /John D. Russell/	Date September 16, 2011
Name (Print/Typed) John D. Russell	Registration Number 47,048

Note: *Signatures of all the inventors or assignees of record of the entire interest or their representative(s) are required in accordance with 37 CFR 1.33 and 11.18. Please see 37 CFR 1.4(d) for the form of the signature. If necessary, submit multiple forms for more than one signature see below*.*

[X] *Total of 1 forms are submitted.

The information is required to obtain or retain a benefit by the public which is to file (and by the USPTO to process) an application. Confidentiality is governed by 35 U.S.C. 122 and 37 CFR 1.11 and 1.14. This collection is estimated to take 12 hours to complete, including gathering, preparing, and submitting the completed application form to the USPTO. Time will vary depending upon the individual case. Any comments on the amount of time you require to complete this form and/or suggestions for reducing this burden, should be sent to the Chief Information Officer, U.S. Patent and Trademark Office, U.S. Department of Commerce, P.O. Box 1450, Alexandria, VA 22313-1450. DO NOT SEND FEES OR COMPLETED FORMS TO THIS ADDRESS. **SEND TO: Commissioner for Patents, P.O. Box 1450, Alexandria, VA 22313-1450.**

If you need assistance in completing the form, call 1-800-PTO-9199 and select option 2.

IN THE UNITED STATES PATENT AND TRADEMARK OFFICE

Applicants	:	Ross Dykstra Pursifull, et al.
Application No.	:	13/182,375
Filed	:	July 13, 2011
Title	:	Method and System for a Turbocharged Engine
Group Art Unit	:	3747
Confirmation No.	:	6255
Docket No.	:	83199098

Commissioner for Patents
P.O. Box 1450
Alexandria, VA 22313-1450

CERTIFICATE OF TRANSMISSION

I hereby certify that this correspondence is being transmitted via the U.S. Patent and Trademark Office electronic filing system (EFS-Web) to the USPTO on:

September 16, 2011	/Angie C. Farr/
Date	Angie C. Farr

STATEMENTS OF SPECIAL STATUS

Applicants respectfully request consideration of the following statement concerning the basis for the special status as well as the following statement pertaining to the materiality standard.

I. Statement concerning the basis for special status.

Applicants submit that special status is sought on the following bases: (1) the claimed invention materially contributes to the more efficient utilization and conservation of energy resources; and/or (2) the claimed invention materially contributes to greenhouse gas emission reduction.

II. Statement pertaining to the materiality standard.

As a preliminary matter, Applicants note that the following statement refers explicitly to the elements of independent claim 1, which is the broadest claim in many respects.

Regarding basis (1), Applicants submit that the claimed invention materially contributes to the more efficient utilization and conservation of energy resources by improving fuel economy (*i.e.*, more efficiently utilizing and conserving fossil fuels).

Specifically, the claimed invention improves delivery of EGR, thus improving fuel economy. As explained in the Background and Summary of the subject application, engine systems may be configured with exhaust gas recirculation (EGR) systems wherein at least a portion of the exhaust gas is recirculated to the engine intake. Such EGR systems enable reduction in exhaust emissions while also improving fuel economy, especially at higher levels of engine boost.

In some engines, low-pressure EGR (LP-EGR) and boosted fresh air may be provided via separate inlet ports to increase charge stratification and improve self-ignition, for example. However, this arrangement can make it difficult to deliver high pressure EGR (HP-EGR). There may be engine operating conditions during which it may be advantageous to provide HP-EGR rather than, or in addition to, LP-EGR. Further still, since LP-EGR and HP-EGR require different control approaches, there may be delays in controlling both LP-EGR and HP-EGR, in particular, during transients. These issues can reduce overall EGR efficiency. The claimed invention addresses this issue by providing a method for boosting an engine using a separate intake passage for LP-EGR and HP-EGR.

For example, claim 1 recites:

> A method of operating an engine cylinder, comprising:
> opening a first recirculating a first amount of exhaust gas at a first pressure from a first exhaust passage of the cylinder to a first intake passage of the cylinder while recirculating a second amount of exhaust gas at a second, different pressure from a second, distinct exhaust passage of the cylinder via a second, distinct intake passage.

In this way, both LP-EGR and HP-EGR may be concurrently provided through distinct passages while being controlled independently. The EGR of different pressures may then be mixed and combusted in the cylinder. As such, EGR benefits can be availed with engine boost over a larger range of engine speed/load conditions, improving fuel economy.

Regarding basis (2), Applicants submit that the claimed invention materially contributes to greenhouse gas emission reduction as follows. CO_2 is a greenhouse gas produced during fossil fuel combustion. As explained above and set forth in claim 1, the

claimed invention improves fuel economy by increasing EGR efficiency, thus reducing the amount of fossil fuels combusted and lowering CO_2 emissions.

Please charge any cost incurred in this filing, along with any other costs, to Deposit Account No. 06-1510.

Respectfully submitted,

ALLEMAN HALL MCCOY RUSSELL & TUTTLE LLP

/John D. Russell/
John D. Russell
Registration No. 47,048
Customer No. 36865
Attorney/Agent for Applicants/Assignee
806 S.W. Broadway, Suite 600
Portland, Oregon 97205
Telephone: (503) 459-4141
Facsimile: (503) 459-4142

UNITED STATES PATENT AND TRADEMARK OFFICE

UNITED STATES DEPARTMENT OF COMMERCE
United States Patent and Trademark Office
Address: COMMISSIONER FOR PATENTS
P.O. Box 1450
Alexandria, Virginia 22313-1450
www.uspto.gov

APPLICATION NO.	FILING DATE	FIRST NAMED INVENTOR	ATTORNEY DOCKET NO.	CONFIRMATION NO.
13/182,375	07/13/2011	Ross Dykstra Pursifull	83199098	6255

36865 7590 09/22/2011

ALLEMAN HALL MCCOY RUSSELL & TUTTLE, LLP
806 S.W. BROADWAY, SUITE 600
PORTLAND, OR 97205

EXAMINER	
ART UNIT	PAPER NUMBER
3748	

MAIL DATE	DELIVERY MODE
09/22/2011	PAPER

Please find below and/or attached an Office communication concerning this application or proceeding.

The time period for reply, if any, is set in the attached communication.

UNITED STATES PATENT AND TRADEMARK OFFICE

Commissioner for Patents
United States Patent and Trademark Office
P.O. Box 1450
Alexandria, VA 22313-1450
www.uspto.gov

ALLEMAN HALL MCCOY RUSSELL & TUTTLE, LLP
806 S.W. BROADWAY, SUITE 600
PORTLAND OR 97205

In re Application of	:	
PURSIFULL, ROSS DYKSTRA , et al	:	DECISION ON PETITION
Application No. 13/182,375	:	TO MAKE SPECIAL UNDER
Filed: July 13, 2011	:	THE GREEN TECHNOLOGY
Attorney Docket No. **83199098**	:	PILOT PROGRAM

This is a decision on the renewed petition under 37 CFR 1.102, filed September 16, 2011 to make the above-identified application special under the pilot program for applications pertaining to Green Technologies as set forth in 74 Federal Register Notice 64666 (December 8, 2009) and amended by 75 Federal Register Notice 28554 (May 21, 2010) and 75 Federal Register Notice 69049 (November 10, 2010).

The petition is **granted.**

A grantable petition to make an application special under 37 CFR 1.102 and the pilot program as set forth in 74 FR 64666 must be directed to a nonprovisional application filed under 35 USC 111(a) or be a national stage entry under 35 USC 371, exclusive of any reissue applications.

In order to qualify for special status, the following requirements must be met. 1) The application must have no more than 3 independent claims and no more than 20 total claims. 2) The application must not contain any multiple dependent claims. 3) The petition must state the basis for seeking special status, i.e., the claimed invention either: A) materially enhances the quality of the environment or B) materially contributes to: i) the discovery or development of renewable energy resources, ii) the more efficient utilization and conservation of energy resources, or iii) greenhouse gas emission reduction. 4) If the disclosure is not clear on its face that the claimed invention materially contributes under category (A) or (B), the petition must be accompanied by a statement by the applicant, assignee, or an attorney/agent registered to practice before the Office explaining how the materiality standard is met. 5) A statement that applicant will agree to make an election without traverse in a telephonic interview if a restriction requirement is made by the examiner. 6) The petition to make special must be filed electronically. 7) The petition must be filed at least one day prior to the date that a first Office Action appears in the Patent Application Information Retrieval (PAIR) system. 8) The petition must be accompanied by a request for early publication in compliance with 37 CFR 1.219 and include the publication fee as set forth in 37 CFR 1.18(d).

The requirement for a fee for consideration of the petition to make special for applications pertaining to Green Technologies has been waived.

The instant petition complies with items 1 – 8 above. Accordingly, the above-identified application has been accorded "special" status.

Telephone inquires concerning this decision should be directed to Henry C. Yuen at 571-272-4856.

This application will be forwarded to the Technology Center Art Unit 3748 for action on the merits commensurate with this decision.

/Henry C. Yuen/

Henry C. Yuen
Quality Assurance Specialist
Technology Center TC 3700

Doc Code: PET.GREEN
Document Description: Petition for Green Tech Pilot

PTO/SB/420 (11-10)
Approved for use through 01/31/2011. OMB 0651-0062
U.S. Patent and Trademark Office; U. S. DEPARTMENT OF COMMERCE
Under the Paperwork Reduction Act of 1995, no persons are required to respond to a collection of information unless it displays a valid OMB control number.

PETITION TO MAKE SPECIAL UNDER THE GREEN TECHNOLOGY PILOT PROGRAM

Attorney Docket Number: 83199101	Application Number (if known): 13/182377	Filing date: July 13, 2011
First Named Inventor: Ross Dykstra Pursifull		
Title: METHOD AND SYSTEM FOR A TURBOCHARGED ENGINE		

APPLICANT HEREBY REQUESTS TO PARTICIPATE IN THE GREEN TECHNOLOGY PILOT PROGRAM FOR THE ABOVE-IDENTIFIED APPLICATION. See Instruction Sheet on page 2.

This petition must be timely filed electronically using the USPTO electronic filing system, EFS-Web.

1. By filing this petition:

   Applicant is requesting early publication: Applicant hereby requests early publication under 37 CFR 1.219 and the publication fee set forth in 37 CFR 1.18(d) accompanies this request.

2. By filing this petition: applicant is agreeing to make an election without traverse in a telephonic interview and elect an invention that meets the eligibility requirements for the Green Technology Pilot Program, if the Office determines that the claims are not obviously directed to a single invention. See Instruction Sheet.

3. This request is accompanied by statements of special status for the eligibility requirement.

4. The application contains no more than three (3) independent claims and twenty (20) total claims.

5. The application does not contain any multiple dependent claims.

6. Other attachments: _____

Signature /John D. Russell/	Date September 16, 2011
Name (Print/Typed) John D. Russell	Registration Number 47,048

Note: *Signatures of all the inventors or assignees of record of the entire interest or their representative(s) are required in accordance with 37 CFR 1.33 and 11.18. Please see 37 CFR 1.4(d) for the form of the signature. If necessary, submit multiple forms for more than one signature see below*.*

☒ *Total of 1 forms are submitted.

The information is required to obtain or retain a benefit by the public which is to file (and by the USPTO to process) an application. Confidentiality is governed by 35 U.S.C. 122 and 37 CFR 1.11 and 1.14. This collection is estimated to take 12 hours to complete, including gathering, preparing, and submitting the completed application form to the USPTO. Time will vary depending upon the individual case. Any comments on the amount of time you require to complete this form and/or suggestions for reducing this burden, should be sent to the Chief Information Officer, U.S. Patent and Trademark Office, U.S. Department of Commerce, P.O. Box 1450, Alexandria, VA 22313-1450. DO NOT SEND FEES OR COMPLETED FORMS TO THIS ADDRESS. **SEND TO: Commissioner for Patents, P.O. Box 1450, Alexandria, VA 22313-1450.**

If you need assistance in completing the form, call 1-800-PTO-9199 and select option 2.

IN THE UNITED STATES PATENT AND TRADEMARK OFFICE

Applicants	:	Ross Dykstra Pursifull, et al.
Application No.	:	13/182,377
Filed	:	July 13, 2011
Title	:	Method and System for a Turbocharged Engine
Group Art Unit	:	3747
Confirmation No.	:	6259
Docket No.	:	83199101

Commissioner for Patents
P.O. Box 1450
Alexandria, VA 22313-1450

CERTIFICATE OF TRANSMISSION

I hereby certify that this correspondence is being transmitted via the U.S. Patent and Trademark Office electronic filing system (EFS-Web) to the USPTO on:

September 16, 2011	/Angie C. Farr/
Date	Angie C. Farr

STATEMENTS OF SPECIAL STATUS

Applicants respectfully request consideration of the following statement concerning the basis for the special status as well as the following statement pertaining to the materiality standard.

I. Statement concerning the basis for special status.

Applicants submit that special status is sought on the following bases: (1) the claimed invention materially contributes to the more efficient utilization and conservation of energy resources; and/or (2) the claimed invention materially contributes to greenhouse gas emission reduction.

II. Statement pertaining to the materiality standard.

As a preliminary matter, Applicants note that the following statement refers explicitly to the elements of independent claim 1, which is the broadest claim in many respects.

Regarding basis (1), Applicants submit that the claimed invention materially contributes to the more efficient utilization and conservation of energy resources by improving fuel economy (*i.e.*, more efficiently utilizing and conserving fossil fuels).

Specifically, the claimed invention improves efficiency of a turbocharged engine, thus improving fuel economy. As explained in the Background and Summary of the subject application, engine cylinders may be configured with one or more intake ports for receiving an aircharge. The one or more intake ports may diverge from a common intake passage or may have distinct intake ducts. Further, the one or more intake ports may receive fresh air or may recirculate exhaust gases. Such exhaust gas recirculation (EGR) systems enable reduction in exhaust emissions while also improving fuel economy, especially at higher levels of engine boost.

Often, under low load conditions, the first inlet port of the cylinder is configured to receive recirculated exhaust gas while the second inlet port is configured to receive an air-fuel mixture that has been boosted following passage through a compressor.

However, the addition of an exhaust turbine to drive the compressor may destroy the intended functionality of the system. Specifically, if a turbine were included in the common exhaust port, high pressure exhaust would be drawn into the lower pressure (that is, unboosted) inlet port leading to EGR control issues. As another example, it may be difficult to provide higher pressure EGR (HP-EGR) to further improve engine performance during some conditions.

The claimed invention addresses this issue by providing a method for boosting an engine using a separate intake passage for EGR and boosted fresh air.

For example, claim 1 recites:

> A method of operating an engine, comprising:
> providing a first aircharge at or below barometric pressure to an engine cylinder through a first intake passage; and
> providing a second, boosted aircharge to the cylinder through a second, separate intake passage, the second aircharge boosted via an intake compressor driven by an exhaust turbine.

An intake compressor may be driven by an exhaust turbine to provide a boosted intake aircharge to a cylinder through an intake passage while a naturally aspirated intake aircharge is provided to the cylinder, in parallel, through a separate intake passage. The different aircharges may then be mixed with each other, and fuel, in the cylinder prior to combustion. In this way, at least a portion of the fresh intake air can be provided via natural aspiration while the other portion is compressed. By reducing the portion of

intake air requiring compression, compressor efficiency can be increased and control delays can be reduced, thus improving fuel economy. Additionally, the desired boost can be provided via a smaller compressor and turbine, without compromising boost performance. Thus, engine efficiency may be increased, and fuel economy improved.

Regarding basis (2), Applicants submit that the claimed invention materially contributes to greenhouse gas emission reduction as follows. CO_2 is a greenhouse gas produced during fossil fuel combustion. As explained above and set forth in claim 1, the claimed invention improves fuel economy by increasing engine efficiency, thus reducing the amount of fossil fuels combusted and lowering CO_2 emissions.

Please charge any cost incurred in this filing, along with any other costs, to Deposit Account No. 06-1510.

Respectfully submitted,

ALLEMAN HALL MCCOY RUSSELL & TUTTLE LLP

/John D. Russell/
John D. Russell
Registration No. 47,048
Customer No. 36865
Attorney/Agent for Applicants/Assignee
806 S.W. Broadway, Suite 600
Portland, Oregon 97205
Telephone: (503) 459-4141
Facsimile: (503) 459-4142

UNITED STATES PATENT AND TRADEMARK OFFICE

UNITED STATES DEPARTMENT OF COMMERCE
United States Patent and Trademark Office
Address: COMMISSIONER FOR PATENTS
P.O. Box 1450
Alexandria, Virginia 22313-1450
www.uspto.gov

APPLICATION NO.	FILING DATE	FIRST NAMED INVENTOR	ATTORNEY DOCKET NO.	CONFIRMATION NO.
13/182,377	07/13/2011	Ross Dykstra Pursifull	83199101	6259

36865 7590 09/22/2011

ALLEMAN HALL MCCOY RUSSELL & TUTTLE, LLP
806 S.W. BROADWAY, SUITE 600
PORTLAND, OR 97205

EXAMINER	
ART UNIT	PAPER NUMBER
3748	

MAIL DATE	DELIVERY MODE
09/22/2011	PAPER

Please find below and/or attached an Office communication concerning this application or proceeding.

The time period for reply, if any, is set in the attached communication.

UNITED STATES PATENT AND TRADEMARK OFFICE

Commissioner for Patents
United States Patent and Trademark Office
P.O. Box 1450
Alexandria, VA 22313-1450
www.uspto.gov

ALLEMAN HALL MCCOY RUSSELL & TUTTLE, LLP
806 S.W. BROADWAY, SUITE 600
PORTLAND OR 97205

In re Application of	:	
PURSIFULL, ROSS DYKSTRA , et al	:	DECISION ON PETITION
Application No. 13/182,377	:	TO MAKE SPECIAL UNDER
Filed: July 13, 2011	:	THE GREEN TECHNOLOGY
Attorney Docket No. **83199098**	:	PILOT PROGRAM

This is a decision on the renewed petition under 37 CFR 1.102, filed September 16, 2011 to make the above-identified application special under the pilot program for applications pertaining to Green Technologies as set forth in 74 Federal Register Notice 64666 (December 8, 2009) and amended by 75 Federal Register Notice 28554 (May 21, 2010) and 75 Federal Register Notice 69049 (November 10, 2010).

The petition is **granted.**

A grantable petition to make an application special under 37 CFR 1.102 and the pilot program as set forth in 74 FR 64666 must be directed to a nonprovisional application filed under 35 USC 111(a) or be a national stage entry under 35 USC 371, exclusive of any reissue applications.

In order to qualify for special status, the following requirements must be met. 1) The application must have no more than 3 independent claims and no more than 20 total claims. 2) The application must not contain any multiple dependent claims. 3) The petition must state the basis for seeking special status, i.e., the claimed invention either: A) materially enhances the quality of the environment or B) materially contributes to: i) the discovery or development of renewable energy resources, ii) the more efficient utilization and conservation of energy resources, or iii) greenhouse gas emission reduction. 4) If the disclosure is not clear on its face that the claimed invention materially contributes under category (A) or (B), the petition must be accompanied by a statement by the applicant, assignee, or an attorney/agent registered to practice before the Office explaining how the materiality standard is met. 5) A statement that applicant will agree to make an election without traverse in a telephonic interview if a restriction requirement is made by the examiner. 6) The petition to make special must be filed electronically. 7) The petition must be filed at least one day prior to the date that a first Office Action appears in the Patent Application Information Retrieval (PAIR) system. 8) The petition must be accompanied by a request for early publication in compliance with 37 CFR 1.219 and include the publication fee as set forth in 37 CFR 1.18(d).

The requirement for a fee for consideration of the petition to make special for applications pertaining to Green Technologies has been waived.

The instant petition complies with items 1 – 8 above. Accordingly, the above-identified application has been accorded "special" status.

Telephone inquires concerning this decision should be directed to Henry C. Yuen at 571-272-4856.

This application will be forwarded to the Technology Center Art Unit 3748 for action on the merits commensurate with this decision.

/Henry C. Yuen/

Henry C. Yuen
Quality Assurance Specialist
Technology Center TC 3700

Doc Code: PET.GREEN
Document Description: Petition for Green Tech Pilot

PTO/SB/420 (05-10)
Approved for use through 05/31/2010. OMB 0651-0062
U.S. Patent and Trademark Office; U. S. DEPARTMENT OF COMMERCE
Under the Paperwork Reduction Act of 1995, no persons are required to respond to a collection of information unless it displays a valid OMB control number.

PETITION TO MAKE SPECIAL UNDER THE GREEN TECHNOLOGY PILOT PROGRAM

Attorney Docket Number: 3449-0619PUS5	Application Number (if known):	Filing date:
First Named Inventor: Jun Seok PARK		
Title: PACKAGE FOR LIGHT EMITTING DEVICE		

APPLICANT HEREBY REQUESTS TO PARTICIPATE IN THE GREEN TECHNOLOGY PILOT PROGRAM FOR THE ABOVE-IDENTIFIED APPLICATION. See Instruction Sheet on page 2.

This petition must be timely filed electronically using the USPTO electronic filing system, EFS-Web.

1. By filing this petition:

   Applicant is requesting early publication: Applicant hereby requests early publication under 37 CFR 1.219 and the publication fee set forth in 37 CFR 1.18(d) accompanies this request.

2. By filing this petition: applicant is agreeing to make an election without traverse in a telephonic interview and elect an invention that meets the eligibility requirements set forth in the notice titled "Pilot Program for Green Technologies Including Greenhouse Gas Reduction," as modified by the notice titled "Elimination of Classification Requirement in the Green Technology Pilot Program," each of which was published in the Federal Register, if the Office determines that the claims are not obviously directed to a single invention.

3. This request is accompanied by statements of special status for the eligibility requirement.

4. The application contains no more than three (3) independent claims and twenty (20) total claims.

5. The application does not contain any multiple dependent claims.

6. Other attachments: _____

Signature	Date JUL 13 2011
Name (Print/Typed) Esther H. Chong	Registration Number 40953

Note: *Signatures of all the inventors or assignees of record of the entire interest or their representative(s) are required in accordance with 37 CFR 1.33 and 11.18. Please see 37 CFR 1.4(d) for the form of the signature. If necessary, submit multiple forms for more than one signature, see below*.*

☐ *Total of _____ forms are submitted.

The information is required to obtain or retain a benefit by the public which is to file (and by the USPTO to process) an application. Confidentiality is governed by 35 U.S.C. 122 and 37 CFR 1.11 and 1.14. This collection is estimated to take 12 hours to complete, including gathering, preparing, and submitting the completed application form to the USPTO. Time will vary depending upon the individual case. Any comments on the amount of time you require to complete this form and/or suggestions for reducing this burden, should be sent to the Chief Information Officer, U.S. Patent and Trademark Office, U.S. Department of Commerce, P.O. Box 1450, Alexandria, VA 22313-1450. DO NOT SEND FEES OR COMPLETED FORMS TO THIS ADDRESS. **SEND TO: Commissioner for Patents, P.O. Box 1450, Alexandria, VA 22313-1450.**

If you need assistance in completing the form, call 1-800-PTO-9199 and select option 2.

Docket No.: 3449-0619PUS5
(Patent)

IN THE UNITED STATES PATENT AND TRADEMARK OFFICE

Patent Application of:	Jun Seok PARK		
Application No.:	NEW	Confirmation No.:	NEW
Filed:	Concurrently Herewith	Art Unit:	Not Yet Assigned
For:	PACKAGE FOR LIGHT EMITTING DEVICE	Examiner:	Not Yet Assigned

STATEMENT OF SPECIAL STATUS FOR THE ELIGIBILITY REQUIREMENT UNDER THE GREEN TECHNOLOGY PILOT PROGRAM

Commissioner for Patents
P.O. Box 1450
Alexandria, VA 22313-1450

Sir:

In support of the Petition to Make Special Under the Green Technology Pilot Program, it is respectfully submitted that the basis for the requested special status is that the invention claimed in the above-identified patent application materially contributes to improvement in environmental quality, energy conservation and/or reduction of greenhouse gas emissions. Specifically, the claimed invention relates to a semiconductor light emitting device, and a semiconductor light emitting package.

For example, semiconductor light emitting devices and semiconductor light emitting packages have a much longer life-span than conventional light sources such as fluorescent tubes or other traditional light sources. Semiconductor light emitting devices and semiconductor light emitting packages also use less energy or power to operate than other traditional light sources. Thus, the environmental quality is significantly improved, energy is conserved, and greenhouse gas emissions to generate energy or power are reduced.

Additionally, by filing this petition, the applicants agree to make an election without traverse in a telephone interview and elect an invention that meets the eligibility requirements set for in the notice title "Pilot Program for Green Technologies Including Greenhouse Gas

Reduction," as modified by the notice title "Elimination of Classification Requirement in the Green Technology Pilot Program," each of which was published in the Federal Register, if the Office determines that the claims are not obviously directed to a single invention.

It is also submitted that this application meets the eligibility requirements to participate in the Green Technology Pilot Program, as listed in the attached Petition to Make Special Under the Green Technology Pilot Program.

Accordingly, it is respectfully requested that the Petition be granted.

Should there be any outstanding matters that need to be resolved in the present application, the Examiner is respectfully requested to contact Seth S. Kim, Reg. No. 54,577, at the telephone number of the undersigned below to conduct an interview in an effort to expedite prosecution in connection with the present application.

If necessary, the Director is hereby authorized in this, concurrent, and future replies to charge any fees required during the pendency of the above-identified application or credit any overpayment to Deposit Account No. 02-2448.

Dated: JUL 13 2011

Respectfully submitted,

By _____

Esther H. Chong
Registration No.: 40953
BIRCH, STEWART, KOLASCH & BIRCH, LLP
8110 Gatehouse Road, Suite 100 East
P.O. Box 747
Falls Church, VA 22040-0747
703-205-8000

UNITED STATES PATENT AND TRADEMARK OFFICE

UNITED STATES DEPARTMENT OF COMMERCE
United States Patent and Trademark Office
Address: COMMISSIONER FOR PATENTS
P.O. Box 1450
Alexandria, Virginia 22313-1450
www.uspto.gov

APPLICATION NO.	FILING DATE	FIRST NAMED INVENTOR	ATTORNEY DOCKET NO.	CONFIRMATION NO.
13/182,389	07/13/2011	Park Jun Seok	3449-0619PUS5	6285

2292 7590 08/26/2011
BIRCH STEWART KOLASCH & BIRCH
PO BOX 747
FALLS CHURCH, VA 22040-0747

EXAMINER	
ART UNIT	PAPER NUMBER
2894	

NOTIFICATION DATE	DELIVERY MODE
08/26/2011	ELECTRONIC

Please find below and/or attached an Office communication concerning this application or proceeding.

The time period for reply, if any, is set in the attached communication.

Notice of the Office communication was sent electronically on above-indicated "Notification Date" to the following e-mail address(es):

mailroom@bskb.com

UNITED STATES PATENT AND TRADEMARK OFFICE

Commissioner for Patents
United States Patent and Trademark Office
P.O. Box 1450
Alexandria, VA 22313-1450
www.uspto.gov

BIRCH STEWART KOLASCH & BIRCH
PO BOX 747
FALLS CHURCH VA 22040-0747

AUG 26 2011

In re Application of :
SEOK, Park :
Application No. 13182389 :
Filed: July 13, 2011 :
Attorney Docket No. 3449-0619PUS5 :

DECISION ON PETITION
TO MAKE SPECIAL UNDER
THE GREEN TECHNOLOGY
PILOT PROGRAM

This is a decision on the petition under 37 CFR 1.102, filed on June 29, 2011, to make the above-identified application special under the pilot program for applications pertaining to Green Technologies as set forth 74 Federal Register Notice 64666 (December 8, 2009) and amended by 75 Federal Register Notice 28554 (May 21, 2010) and 75 Federal Register Notice 69049 (November 10, 2010).

The petition is **GRANTED**.

A grantable petition to make an application special under 37 CFR 1.102 and the pilot program as set forth in 74 FR 64666 must be directed to a nonprovisional application filed under 35 USC 111(a) or be a national stage entry under 35 USC 371, exclusive of any reissue applications.

In order to qualify for special status, the following requirements must be met. 1) The application must have no more than 3 independent claims and no more than 20 total claims. 2) The application must not contain any multiple dependent claims. 3) The petition must state the basis for seeking special status, i.e., the claimed invention either: A) materially enhances the quality of the environment or B) materially contributes to: i) the discovery or development of renewable energy resources, ii) the more efficient utilization and conservation of energy resources, or iii) greenhouse gas emission reduction. 4) If the disclosure is not clear on its face that the claimed invention materially contributes under category (A) or (B), the petition must be accompanied by a statement by the applicant, assignee, or an attorney/agent registered to practice before the Office explaining how the materiality standard is met. 5) A statement that applicant will agree to make an election without traverse in a telephonic interview if a restriction requirement is made by the examiner. 6) The petition to make special must be filed electronically. 7) The petition must be filed at least one day prior to the date that a first Office Action appears in the Patent Application Information Retrieval (PAIR) system. 8) The petition must be accompanied by a request for early publication in compliance with 37 CFR 1.219 and include the publication fee as set forth in 37 CFR 1.18(d).

The requirement for a fee for consideration of the petition to make special for applications pertaining to Green Technologies has been waived.

The instant petition complies with items 1 – 8 above. Accordingly, the above-identified application has been accorded "special" status.

Telephone inquires concerning this decision should be directed to Colleen Dunn at 571-272-1170.

The application is being forwarded to the appropriate Technology Center Art Unit for action on the merits commensurate with this decision.

/Colleen Dunn/

Colleen Dunn
Quality Assurance Specialist
Technology Center 2800

Doc Code: PET.GREEN
Document Description: Petition for Green Tech Pilot

PTO/SB/420 (05-10)
Approved for use through 05/31/2010. OMB 0651-0062
U.S. Patent and Trademark Office; U. S. DEPARTMENT OF COMMERCE
Under the Paperwork Reduction Act of 1995, no persons are required to respond to a collection of information unless it displays a valid OMB control number.

PETITION TO MAKE SPECIAL UNDER THE GREEN TECHNOLOGY PILOT PROGRAM

Attorney Docket Number: 3449-0619PUS4	Application Number (if known):	Filing date:
First Named Inventor: Jun Seok PARK		
Title: PACKAGE FOR LIGHT EMITTING DEVICE		

APPLICANT HEREBY REQUESTS TO PARTICIPATE IN THE GREEN TECHNOLOGY PILOT PROGRAM FOR THE ABOVE-IDENTIFIED APPLICATION. See Instruction Sheet on page 2.

This petition must be timely filed electronically using the USPTO electronic filing system, EFS-Web.

1. By filing this petition:

   Applicant is requesting early publication: Applicant hereby requests early publication under 37 CFR 1.219 and the publication fee set forth in 37 CFR 1.18(d) accompanies this request.

2. By filing this petition: applicant is agreeing to make an election without traverse in a telephonic interview and elect an invention that meets the eligibility requirements set forth in the notice titled "Pilot Program for Green Technologies Including Greenhouse Gas Reduction," as modified by the notice titled "Elimination of Classification Requirement in the Green Technology Pilot Program," each of which was published in the Federal Register, if the Office determines that the claims are not obviously directed to a single invention.

3. This request is accompanied by statements of special status for the eligibility requirement.

4. The application contains no more than three (3) independent claims and twenty (20) total claims.

5. The application does not contain any multiple dependent claims.

6. Other attachments: _____

Signature	Date JUL 13 2011
Name (Print/Typed) Esther H. Chong	Registration Number 40953

Note: *Signatures of all the inventors or assignees of record of the entire interest or their representative(s) are required in accordance with 37 CFR 1.33 and 11.18. Please see 37 CFR 1.4(d) for the form of the signature. If necessary, submit multiple forms for more than one signature, see below*.*

☐ *Total of _____ forms are submitted.

The information is required to obtain or retain a benefit by the public which is to file (and by the USPTO to process) an application. Confidentiality is governed by 35 U.S.C. 122 and 37 CFR 1.11 and 1.14. This collection is estimated to take 12 hours to complete, including gathering, preparing, and submitting the completed application form to the USPTO. Time will vary depending upon the individual case. Any comments on the amount of time you require to complete this form and/or suggestions for reducing this burden, should be sent to the Chief Information Officer, U.S. Patent and Trademark Office, U.S. Department of Commerce, P.O. Box 1450, Alexandria, VA 22313-1450. DO NOT SEND FEES OR COMPLETED FORMS TO THIS ADDRESS. **SEND TO: Commissioner for Patents, P.O. Box 1450, Alexandria, VA 22313-1450.**

If you need assistance in completing the form, call 1-800-PTO-9199 and select option 2.

Docket No.: 3449-0619PUS4
(Patent)

IN THE UNITED STATES PATENT AND TRADEMARK OFFICE

Patent Application of:
Jun Seok PARK

Application No.:	NEW	Confirmation No.:	NEW
Filed:	Concurrently Herewith	Art Unit:	Not Yet Assigned
For:	PACKAGE FOR LIGHT EMITTING DEVICE	Examiner:	Not Yet Assigned

STATEMENT OF SPECIAL STATUS FOR THE ELIGIBILITY REQUIREMENT UNDER THE GREEN TECHNOLOGY PILOT PROGRAM

Commissioner for Patents
P.O. Box 1450
Alexandria, VA 22313-1450

Sir:

In support of the Petition to Make Special Under the Green Technology Pilot Program, it is respectfully submitted that the basis for the requested special status is that the invention claimed in the above-identified patent application materially contributes to improvement in environmental quality, energy conservation and/or reduction of greenhouse gas emissions. Specifically, the claimed invention relates to a semiconductor light emitting device, and a semiconductor light emitting package.

For example, semiconductor light emitting devices and semiconductor light emitting packages have a much longer life-span than conventional light sources such as fluorescent tubes or other traditional light sources. Semiconductor light emitting devices and semiconductor light emitting packages also use less energy or power to operate than other traditional light sources. Thus, the environmental quality is significantly improved, energy is conserved, and greenhouse gas emissions to generate energy or power are reduced.

Additionally, by filing this petition, the applicants agree to make an election without traverse in a telephone interview and elect an invention that meets the eligibility requirements set for in the notice title "Pilot Program for Green Technologies Including Greenhouse Gas

Reduction," as modified by the notice title "Elimination of Classification Requirement in the Green Technology Pilot Program," each of which was published in the Federal Register, if the Office determines that the claims are not obviously directed to a single invention.

It is also submitted that this application meets the eligibility requirements to participate in the Green Technology Pilot Program, as listed in the attached Petition to Make Special Under the Green Technology Pilot Program.

Accordingly, it is respectfully requested that the Petition be granted.

Should there be any outstanding matters that need to be resolved in the present application, the Examiner is respectfully requested to contact Seth S. Kim, Reg. No. 54,577, at the telephone number of the undersigned below to conduct an interview in an effort to expedite prosecution in connection with the present application.

If necessary, the Director is hereby authorized in this, concurrent, and future replies to charge any fees required during the pendency of the above-identified application or credit any overpayment to Deposit Account No. 02-2448.

Dated: JUL 13 2011

Respectfully submitted,

By _____

Esther H. Chong
Registration No.: 40953
BIRCH, STEWART, KOLASCH & BIRCH, LLP
8110 Gatehouse Road, Suite 100 East
P.O. Box 747
Falls Church, VA 22040-0747
703-205-8000

UNITED STATES PATENT AND TRADEMARK OFFICE

UNITED STATES DEPARTMENT OF COMMERCE
United States Patent and Trademark Office
Address: COMMISSIONER FOR PATENTS
P.O. Box 1450
Alexandria, Virginia 22313-1450
www.uspto.gov

APPLICATION NO.	FILING DATE	FIRST NAMED INVENTOR	ATTORNEY DOCKET NO.	CONFIRMATION NO.
13/182,393	07/13/2011	Park Jun Seok	3449-0619PUS4	6293

2292 7590 08/26/2011

BIRCH STEWART KOLASCH & BIRCH
PO BOX 747
FALLS CHURCH, VA 22040-0747

EXAMINER	
ART UNIT	PAPER NUMBER
2894	

NOTIFICATION DATE	DELIVERY MODE
08/26/2011	ELECTRONIC

Please find below and/or attached an Office communication concerning this application or proceeding.

The time period for reply, if any, is set in the attached communication.

Notice of the Office communication was sent electronically on above-indicated "Notification Date" to the following e-mail address(es):

mailroom@bskb.com

UNITED STATES PATENT AND TRADEMARK OFFICE

Commissioner for Patents
United States Patent and Trademark Office
P.O. Box 1450
Alexandria, VA 22313-1450
www.uspto.gov

BIRCH STEWART KOLASCH & BIRCH
PO BOX 747
FALLS CHURCH VA 22040-0747

AUG 26 2011

In re Application of :
SEOK, Park :
Application No. 13182393 :
Filed: July 13, 2011 :
Attorney Docket No. 3449-0619PUS4 :

DECISION ON PETITION
TO MAKE SPECIAL UNDER
THE GREEN TECHNOLOGY
PILOT PROGRAM

This is a decision on the petition under 37 CFR 1.102, filed on June 29, 2011, to make the above-identified application special under the pilot program for applications pertaining to Green Technologies as set forth 74 Federal Register Notice 64666 (December 8, 2009) and amended by 75 Federal Register Notice 28554 (May 21, 2010) and 75 Federal Register Notice 69049 (November 10, 2010).

The petition is **GRANTED**.

A grantable petition to make an application special under 37 CFR 1.102 and the pilot program as set forth in 74 FR 64666 must be directed to a nonprovisional application filed under 35 USC 111(a) or be a national stage entry under 35 USC 371, exclusive of any reissue applications.

In order to qualify for special status, the following requirements must be met. 1) The application must have no more than 3 independent claims and no more than 20 total claims. 2) The application must not contain any multiple dependent claims. 3) The petition must state the basis for seeking special status, i.e., the claimed invention either: A) materially enhances the quality of the environment or B) materially contributes to: i) the discovery or development of renewable energy resources, ii) the more efficient utilization and conservation of energy resources, or iii) greenhouse gas emission reduction. 4) If the disclosure is not clear on its face that the claimed invention materially contributes under category (A) or (B), the petition must be accompanied by a statement by the applicant, assignee, or an attorney/agent registered to practice before the Office explaining how the materiality standard is met. 5) A statement that applicant will agree to make an election without traverse in a telephonic interview if a restriction requirement is made by the examiner. 6) The petition to make special must be filed electronically. 7) The petition must be filed at least one day prior to the date that a first Office Action appears in the Patent Application Information Retrieval (PAIR) system. 8) The petition must be accompanied by a request for early publication in compliance with 37 CFR 1.219 and include the publication fee as set forth in 37 CFR 1.18(d).

The requirement for a fee for consideration of the petition to make special for applications pertaining to Green Technologies has been waived.

The instant petition complies with items 1 – 8 above. Accordingly, the above-identified application has been accorded "special" status.

Telephone inquires concerning this decision should be directed to Colleen Dunn at 571-272-1170.

The application is being forwarded to the appropriate Technology Center Art Unit for action on the merits commensurate with this decision.

/Colleen Dunn/

Colleen Dunn
Quality Assurance Specialist
Technology Center 2800

UNITED STATES PATENT AND TRADEMARK OFFICE

UNITED STATES DEPARTMENT OF COMMERCE
United States Patent and Trademark Office
Address: COMMISSIONER FOR PATENTS
P.O. Box 1450
Alexandria, Virginia 22313-1450
www.uspto.gov

APPLICATION NO.	FILING DATE	FIRST NAMED INVENTOR	ATTORNEY DOCKET NO.	CONFIRMATION NO.
13/182,433	07/13/2011	Michael T. Nordsiek	83136C17(54610)	6384

21874 7590 07/19/2011

EDWARDS ANGELL PALMER & DODGE LLP
P.O. BOX 55874
BOSTON, MA 02205

EXAMINER	
ART UNIT	PAPER NUMBER
1629	

MAIL DATE	DELIVERY MODE
07/19/2011	PAPER

Please find below and/or attached an Office communication concerning this application or proceeding.

The time period for reply, if any, is set in the attached communication.

UNITED STATES PATENT AND TRADEMARK OFFICE

Commissioner for Patents
United States Patent and Trademark Office
P.O. Box 1450
Alexandria, VA 22313-1450
www.uspto.gov

JUL 19 2011

EDWARDS ANGELL PALMER & DODGE LLP
P.O. BOX 55874
BOSTON MA 02205

In re Application of:
Nordsiek et al.

Serial No.: 13/182,433

Filed: : July 13, 2011

Docket: **83136C17(54610)**

Title: **METHOD OF TREATING ACTINIC KERATOSIS WITH 3.75% IMIQUIMOD CREAM**

DECISION ON PETITION TO MAKE SPECIAL FOR NEW APPLICATION UNDER 37 C.F.R. § 1.102 & M.P.E.P. § 708.02

This is a decision on the petition July 13, 2011, to make the above-identified application special for accelerated examination procedure under 37 C.F.R. § 1.102(d).

The petition to make the application special is GRANTED.

The application is eligible for accelerated examination and the petition complies with the conditions for granting the application special status pursuant to the "Change to Practice for Petitions in Patent Applications to Make Special and for Accelerated Examination" published June 26, 2006, in the Federal Register. (71 Fed. Reg. 36323).

The prosecution of the instant application will be conducted expeditiously according to the following guidelines.

1. The application will be docketed to an examiner and taken up for action within two weeks of the date of this decision.

2. Restriction Practice:
   If the examiner determines that the claims are not directed to a single invention, a telephone request to elect one single invention will be made pursuant to MPEP 812.01. As a prerequisite to the grant of this petition, the applicant has agreed to make an oral election, by telephone, without traverse. If the applicant refuses to make an election

without traverse, or the examiner cannot reach the applicant after a reasonable effort, the examiner will treat the first claimed invention (invention defined by claim 1) as having being constructively elected without traverse for examination.

3. Office action:
   If it is determined that, after appropriate consultation, there is a potential rejection or any other issue to be addressed, the examiner will telephone the applicant and arrange an interview to discuss and resolve the issue. An Office action, other than a Notice of Allowance and Fee(s) Due (Notice of Allowance), will not be issued unless either: 1) an interview was conducted but did not result in agreed to action that places the application in condition for allowance, or, 2) a determination is made that an interview would be unlikely to result in the application being placed in condition for allowance, and 3) an internal conference has been held to review any rejection of any claim.

4. Time for Reply:
   An Office action other than a Notice of Allowance or a final Office action will set a shortened statutory period of one month or thirty days, whichever is longer, for reply with no extension of time available under 37 CFR 1.136(a). Failure to timely file a reply within this non-extendible period for reply will result in the abandonment of the application.

5. Reply by Applicant:
   A timely reply to an Office action other than the Notice of Allowance must be submitted electronically via EFS or EFS-web and limited to addressing the rejections, objections and requirement made. Any amendment that attempts to: 1) add claims which would result in more than three pending independent claims or more than twenty pending total claims; 2) present claims not encompassed by the pre-examination search or an updated accelerated examination support document; or 3) present claims that are directed a non-elected invention or an invention other than that previously claimed and examined in the application, will be treated as not fully responsive and will not be entered.

   For any amendment to the claims (including any new claim) that is not encompassed by the accelerated examination support document, applicant must provide an updated accelerated examination support document that encompasses the amended or new claims at the time of filing of the amendment.

   To proceed expeditiously with the examination, it is recommended that a reply with amendments made to any claim or with any new claim being added be accompanied by an updated accelerated examination support document or a statement explaining how the amended or new claim is supported by the original accelerated examination support document.

6. Information Disclosure Statement (IDS):

7. Any IDS filed during prosecution must be submitted electronically via EFS or EFS-web, accompanied by an updated accelerated examination support document, and be in compliance with 37 CFR 1.97 and 1.98.

8. Post-Allowance Processing:
   To expedite processing of the allowed application into a patent, the applicant must: 1) pay the required fees within one month of the date of the Notice of Allowance, and 2) not file any post allowance papers not required by the Office. In no event may the issue fee be paid and accepted later than three months from the date of the Notice of Allowance.

9. After-Final and Appeal Procedures:
   To expedite prosecution, after receiving the final Office action, applicant must: 1) promptly file a notice of appeal, an appeal brief and appeal fees; and 2) not request a pre-appeal brief conference.

   Any amendment, affidavit or other evidence filed after final Office action must comply with applicable rules and the requirements outlined in numbered paragraphs 5 and 6 above.

   On appeal, the application will proceed according to normal appeal procedures. After appeal, the application will again be treated special.

10. Proceedings Outside the Normal Examination Process:
    If the application becomes involved in a proceeding that is outside the normal examination process (e.g., a secrecy order, national security review, interference proceeding, petitions under 37 CFR 1.181, 182 or 183), the application will be treated special before and after such proceeding.

11. Final Disposition:
    The twelve month goal of this accelerated examination procedure ends with a final disposition. The mailing of a final Office action, a Notice of Allowance, the filing of a Notice of Appeal, or the filing of a Request for Continued Examination (RCE) is the final disposition.

If, during prosecution, a paper is not filed electronically using EFS-web, a reply is filed but is not fully responsive, the application is involved in an appeal, or a proceeding outside normal examination process, the application will still be examined expeditiously, however, the final disposition may occur more than twelve months from the filing of the application.

Any inquiry regarding this decision should be directed to Marianne C. Seidel, Quality Assurance Specialist, at (571) 272-0584.

/MC Seidel/
Marianne C. Seidel, Quality Assurance Specialist
Technology Center 1600

Doc Code: PET.GREEN
Document Description: Petition for Green Tech Pilot

PTO/SB/420 (03-11)

PETITION TO MAKE SPECIAL UNDER THE GREEN TECHNOLOGY PILOT PROGRAM

Attorney Docket Number: 215093-5	Application Number (if known): 13/182,485	Filing date: 07-14-2011

First Named Inventor: Bastiaan Arie Korevaar

Title: METHODS FOR FABRICATION OF NANOWALL SOLAR CELLS AND OPTOELECTRONIC DEVICES

APPLICANT HEREBY REQUESTS TO PARTICIPATE IN THE GREEN TECHNOLOGY PILOT PROGRAM FOR THE ABOVE-IDENTIFIED APPLICATION. See Instruction Sheet on page 2.

This petition must be timely filed electronically using the USPTO electronic filing system, EFS-Web.

1. By filing this petition:

   Applicant is requesting early publication: Applicant hereby requests early publication under 37 CFR 1.219 and the publication fee set forth in 37 CFR 1.18(d) accompanies this request.

2. By filing this petition: applicant is agreeing to make an election without traverse in a telephonic interview and elect an invention that meets the eligibility requirements for the Green Technology Pilot Program, if the Office determines that the claims are not obviously directed to a single invention. See Instruction Sheet.

3. This request is accompanied by statements of special status for the eligibility requirement.

4. The application contains no more than three (3) independent claims and twenty (20) total claims.

5. The application does not contain any multiple dependent claims.

6. Other attachments: Statement Concerning the Basis for the Special Status

Signature /Allison W. Mages/	Date 11-10-2011
Name (Print/Typed) Allison W. Mages	Registration Number 57,275

Note: Signatures of all the inventors or assignees of record of the entire interest or their representative(s) are required in accordance with 37 CFR 1.33 and 11.18. Please see 37 CFR 1.4(d) for the form of the signature. If necessary, submit multiple forms for more than one signature, see below.*

☐ *Total of _____ forms are submitted.

If you need assistance in completing the form, call 1-800-PTO-9199 and select option 2.

IN THE UNITED STATES PATENT AND TRADEMARK OFFICE

First Named Inventor: Bastiaan Arie Korevaar	)
Confirmation No.: 6503	)
	)
Serial No.: 13/182,485	)
	)
Filing Date: 07-14-2011	)
	)
Atty Docket No.: 215093-5 (US)	)

VIA EFS
Commissioner for Patents
P.O. Box 1450
Alexandria, VA 22313-1450

Statement Concerning the Basis for the Special Status

SIR:

The present invention relates generally to solar cells and optoelectronic devices, and more specifically to such devices that include photoactive junctions assembled conformally over nanowall structures, wherein the nanowall structure may be part of a photoactive junction. (See [0003])

In some embodiments, a photovoltaic device includes a substrate and a nanowall structure disposed on the substrate surface. The device also includes at least one layer conformally deposited over the nanowall structure. The layer(s) is(are) at least a portion of a photoactive junction. (See [0015])

In some embodiments, a method for making a photovoltaic device includes generating a nanowall structure on a substrate surface and conformally depositing at least one layer over the nanowall structure thereby forming at least one photoactive junction. (See [0016])

In some embodiments, a solar panel includes at least one photovoltaic device based on a nanowall structure. The solar panel isolates such devices from its surrounding atmospheric environment and permits the generation of electrical power. (See [0017])

Therefore, Applicant respectfully submits that Special Status is sought on the basis that the present invention materially contributes to the discovery or development of renewable energy resources or materially contributes to the more efficient utilization and conservation of energy resources

The undersigned representative may be contacted at the number below to facilitate the resolution of any matters. Please charge any fees that are incurred in connection with this Statement to deposit account no. 09-0470.

Respectfully submitted,

General Electric Company

By : /Allison W. Mages/
Allison W. Mages
Reg. No. 57,275

Dated: November 10, 2011

GE Global Patent Operation
2 Corporate Drive, Suite 648
Shelton, CT 06484
203-944-6730

UNITED STATES PATENT AND TRADEMARK OFFICE

UNITED STATES DEPARTMENT OF COMMERCE
United States Patent and Trademark Office
Address: COMMISSIONER FOR PATENTS
P.O. Box 1450
Alexandria, Virginia 22313-1450
www.uspto.gov

APPLICATION NO.	FILING DATE	FIRST NAMED INVENTOR	ATTORNEY DOCKET NO.	CONFIRMATION NO.
13/182,485	07/14/2011	Bastiaan Arie Korevaar	215093-5	6503

6147 7590 11/18/2011

GENERAL ELECTRIC COMPANY
GLOBAL RESEARCH
ONE RESEARCH CIRCLE
BLDG. K1-3A59
NISKAYUNA, NY 12309

EXAMINER	
ART UNIT	PAPER NUMBER
1725	

NOTIFICATION DATE	DELIVERY MODE
11/18/2011	ELECTRONIC

Please find below and/or attached an Office communication concerning this application or proceeding.

The time period for reply, if any, is set in the attached communication.

Notice of the Office communication was sent electronically on above-indicated "Notification Date" to the following e-mail address(es):

ldocket@crd.ge.com
wahld@ge.com
haeckl@ge.com

UNITED STATES PATENT AND TRADEMARK OFFICE

Commissioner for Patents
United States Patent and Trademark Office
P.O. Box 1450
Alexandria, VA 22313-1450
www.uspto.gov

11/18/11

GENERAL ELECTRIC COMPANY
GLOBAL RESEARCH
ONE RESEARCH CIRCLE
BLDG. K1-3A59
NISKAYUNA NY 12309

In re Application of :
Korevaar et al. :
Application No. 13/182,485 :
Filed: 7/14/2011 :
Attorney Docket No. **215093-5** :

DECISION ON PETITION
TO MAKE SPECIAL UNDER
THE GREEN TECHNOLOGY
PILOT PROGRAM

This is a decision on the petition under 37 CFR 1.102, filed 11/10/2011, to make the above-identified application special under the pilot program for applications pertaining to Green Technologies as set forth in 74 Federal Register Notice 64666 (December 8, 2009) and amended by 75 Federal Register Notice 28554 (May 21, 2010) and 75 Federal Register Notice 69049 (November 10, 2010).

The petition is **GRANTED**.

A grantable petition to make an application special under 37 CFR 1.102 and the pilot program as set forth in 74 FR 64666 must be directed to a nonprovisional application filed under 35 USC 111(a) or be a national stage entry under 35 USC 371, exclusive of any reissue applications.

In order to qualify for special status, the following requirements must be met. 1) The application must have no more than 3 independent claims and no more than 20 total claims. 2) The application must not contain any multiple dependent claims. 3) The petition must state the basis for seeking special status, i.e., the claimed invention either: A) materially enhances the quality of the environment or B) materially contributes to: i) the discovery or development of renewable energy resources, ii) the more efficient utilization and conservation of energy resources, or iii) greenhouse gas emission reduction. 4) If the disclosure is not clear on its face that the claimed invention materially contributes under category (A) or (B), the petition must be accompanied by a statement by the applicant, assignee, or an attorney/agent registered to practice before the Office explaining how the materiality standard is met. 5) A statement that applicant will agree to make an election without traverse in a telephonic interview if a restriction requirement is made by the examiner. 6) The petition to make special must be filed electronically. 7) The petition must be filed at least one day prior to the date that a first Office Action appears in the Patent

Application Information Retrieval (PAIR) system. 8) The petition must be accompanied by a request for early publication in compliance with 37 CFR 1.219 and include the publication fee as set forth in 37 CFR 1.18(d).

The requirement for a fee for consideration of the petition to make special for applications pertaining to Green Technologies has been waived.

The instant petition complies with items 1 – 8 above. Accordingly, the above-identified application has been accorded "special" status.

Telephone inquires concerning this decision should be directed to Tom Dunn at 571-272-1171.

The application is being forwarded to the Technology Center Art Unit 1725 for action on the merits commensurate with this decision.

/Tom Dunn/

Tom Dunn
Quality Assurance Specialist
Technology Center 1700

UNITED STATES PATENT AND TRADEMARK OFFICE

UNITED STATES DEPARTMENT OF COMMERCE
United States Patent and Trademark Office
Address: COMMISSIONER FOR PATENTS
P.O. Box 1450
Alexandria, Virginia 22313-1450
www.uspto.gov

APPLICATION NO.	FILING DATE	FIRST NAMED INVENTOR	ATTORNEY DOCKET NO.	CONFIRMATION NO.
13/182,604	07/14/2011	Alan C. Chan	BRD-000111	6743

64128 7590 03/28/2012

MICHAEL A DESANCTIS
HAMILTON DESANCTIS & CHA LLP
FINANCIAL PLAZA AT UNION SQUARE
225 UNION BOULEVARD, SUITE 150
LAKEWOOD, CO 80228

EXAMINER	
STAMBER, ERIC W	
ART UNIT	PAPER NUMBER
3622	

NOTIFICATION DATE	DELIVERY MODE
03/28/2012	ELECTRONIC

Please find below and/or attached an Office communication concerning this application or proceeding.

The time period for reply, if any, is set in the attached communication.

Notice of the Office communication was sent electronically on above-indicated "Notification Date" to the following e-mail address(es):

mdesanctis@hdciplaw.com
docket@hdciplaw.com

UNITED STATES PATENT AND TRADEMARK OFFICE

Commissioner for Patents
United States Patent and Trademark Office
P.O. Box 1450
Alexandria, VA 22313-1450
www.uspto.gov

MAR 27 2012

MICHAEL A DESANCTIS
HAMILTON DESANCTIS & CHA LLP
FINANCIAL PLAZA AT UNION SQUARE
225 UNION BOULEVARD, SUITE 150
LAKEWOOD CO 80228

In re application of:	:	**DECISION ON PETITION**
CHAN, Alan C., et al.	:	**TO MAKE SPECIAL FOR**
Application No. 13/182,604	:	**NEW APPLICATION**
Filed: July 14, 2011	:	**UNDER 37 CFR 1.102**
For: SOCIAL ADVERTISING PLATFORM		

This decision is regarding the petition filed on July 14, 2011 to make the above-identified application special for accelerated examination procedure under 37 C.F.R. § 1.102(d).

The petition to make the application special is **DISMISSED**.

REGULATION AND PRACTICE

A grantable petition to make special under 37 C.F.R. § 1.102(d) and pursuant to the "Change to Practice for Petitions in Patent Applications to Make Special and for Accelerated Examination" published in the Federal Register on June 26, 2006 (71 Fed. Reg. 36323), must satisfy the following conditions:

I. Conditions Regarding the Application:

1. the application must be a non-reissue utility or design application filed under 37 CFR 1.111(a);

2. the application, the petition and the required fees must be filed electronically using the USPTO's electronic filing system (EFS), or EFS-web; if not filed electronically, a statement asserting that EFS and EFS-web were not available during the normal business hours.

3. at the time of filing, the application must be complete under 37 CFR 1.51 and in condition for examination;

4. the application must contain three or fewer independent claims and twenty or fewer total claims and the claims must be directed to a single invention.

II. Conditions Regarding the Petition:

The petition must:

1. be filed with the application;

2. include a statement that applicant agrees not to separately argue the patentability of any independent claim during any appeal in the application;

3. include a statement that applicant agrees to make an election without traverse in a telephone interview.

4. include a statement that applicant agrees to conduct such an interview when requested by the examiner.

5. include a statement, made based on a good faith belief, that a preexamination search in compliance with the following requirements, was conducted, including an identification of the field of search by United States class and subclass, where applicable, and for database searches, the search logic or chemical structure or sequence used as a query, the name of the file(s) searched and the database service, and the date of the search.

The preexamination search must:

5.1 involve U.S. patents and patent application publications, foreign patent documents, and non-patent literature, unless the applicant can justify with reasonable certainty that no references more pertinent than those already identified are likely to be found in the eliminated sources and includes such a justification with this statement;

5.2. be directed to the claimed invention and encompass all of the features of the claims, giving the claims the broadest reasonable interpretation;

5.3. encompass the disclosed features that may be claimed.

6. must provide in support of the petition an accelerated examination support document.

An accelerated examination support document must include:

6.1. an information disclosure statement (IDS) in compliance with 37 CFR 1.98 citing each reference deemed most closely related to the subject matter of each of the claims;

6.2. an identification of all the limitations in the claims that are disclosed by the reference specifying where the limitation is disclosed in the cited reference;

6.3. a detailed explanation of how each of the claims is patentable over the references cited with particularity required by 37 CFR 1.111(b) and (c);

6.4. a concise statement of the utility of the invention as defined in each of the independent claims (unless the application is a design application);

6.5. a showing of where each limitation of the claims finds support under 35 USC 112, first paragraph, in the written description of the specification. If applicable, the showing must also identify: (1) each means- (or step) plus-function claim element that invokes consideration under 35 USC 112, sixth paragraph; and (2) the structure, material, or acts in the specification that corresponds to each means- (or step) plus-

function claim element that invokes consideration under 35 USC 112, sixth paragraph; if the application claims the benefit of one or more applications under title 35, United States Code, the showing must also include where each limitation of the claims finds support under 35 USC 112, first paragraph, in each such application in which such supports exists;

6.6. an identification of any cited references that may be disqualified under 35 USC 103(c).

REVIEW OF FACTS

The petition in this case fails to comply with Conditions II.5 and II.6.5.

As to Condition II.5, this section requires that the petition include a statement made based on a good faith belief, that a preexamination search in compliance with the requirements was conducted. Further statements are required: that the search was directed to the claimed invention, encompassing all the features of the claims and giving the claims their broadest reasonable interpretation; that no disclosed features that are unclaimed at this time are currently seen as features that may be claimed later; and no search report from a foreign office is provided here as the pre-examination search. No such statements were found. Note e.g. Part 1, sections 8(B) through 8(E) in the Federal Register Notice, Vol. 71, No. 122, page 36323-7 at:
http://www.uspto.gov/web/offices/com/sol/notices/71fr36323.pdf ,
and corresponding sections 8(B) through 8(E) in the Sample AE Pre-Examination Search Document at:
http://www.uspto.gov/web/patents/accelerated/ae_presearch_sample.doc

As to Condition II.6.5, this section requires a showing of where each limitation of the claims finds support under 35 USC 112, first paragraph, in not only the instant application but also in benefit applications. Here, this application claims priority to nonprovisional application 13/088,287 as well as two provisional applications, 61/325264 and 61/330,317, thus support for each limitation of the claims must also be shown in these applications.

DECISION

For the above stated reasons, the petition is **DISMISSED**.

Petitioner is given a single opportunity to perfect the petition. Any request for reconsideration of this decision must be submitted within one (1) month or thirty (30) days, whichever is longer, from the date of this decision. No extensions of time will be granted under 37 CFR 1.136(a) if the request is to be considered timely. Any request for reconsideration must address the deficiencies indicated above.

Petitioner is reminded that, upon granting of the special status of the application on request for reconsideration, the application will be processed expeditiously. However, due to the dismissal of the instant petition, examination may not be completed within twelve months of the filing date of the application.

Any inquiry regarding this decision should be directed to Robert Weinhardt, Business Practice Specialist, at (571) 272-6633.

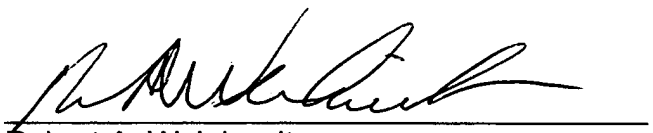

Robert A. Weinhardt,
Business Practice Specialist
Technology Center 3600

RW/3/26/12

UNITED STATES PATENT AND TRADEMARK OFFICE

Commissioner for Patents
United States Patent and Trademark Office
P.O. Box 1450
Alexandria, VA 22313-1450
www.uspto.gov

MARVIN A. GLAZER
2141 E. HIGHLAND AVE
SUITE 155
PHOENIX AZ 85016

MAILED

JUL 21 2011

OFFICE OF PETITIONS

In re Application of :

DADDIO, Vincent P. :
Application No. 13/182,640 : DECISION ON PETITION
Filed: April 14, 2011 : TO MAKE SPECIAL UNDER
Attorney Docket No. **7284-A-1** : 37 CFR 1.102(c)(1)
:

This is a decision on the petition under 37 CFR 1.102(c)(1), filed July 15, 2011 to make the above-identified application special based on applicant's age as set forth in M.P.E.P. § 708.02, Section IV.

The petition is **GRANTED**.

A grantable petition to make an application special under 37 CFR 1.102(c)(1) and MPEP § 708.02, Section IV: Applicant's Age must be accompanied by evidence showing that at least one of the applicants is 65 years of age, or more, such as a birth certificate or a statement by applicant. No fee is required

The instant petition includes a statement by Vincent Daddio attesting to his age. Accordingly, the above-identified application will be accorded "special" status.

Telephone inquiries concerning this decision should be directed to Tredelle Jackson at 571-272-2783.

All other inquiries concerning either the examination or status of the application should be directed to the Technology Center.

This application is being referred to the Office of Patent Application Processing. This application will be accorded "special" status when pre-examination processing is done.

/Tredelle D. Jackson/
Paralegal Specialist
Office of Petitions

UNITED STATES PATENT AND TRADEMARK OFFICE

Commissioner for Patents
United States Patent and Trademark Office
P.O. Box 1450
Alexandria, VA 22313-1450
www.uspto.gov

SPRINKLE IP LAW GROUP / ZIMMER
1301 W. 25TH STREET
SUITE 408
AUSTIN, TX 78705

MAILED

MAR 26 2012

OFFICE OF PETITIONS

In re Application of
Jason Piehl
Application No. 13/182,663
Filed: July 14, 2011
Attorney Docket No. ZIMM2480-2

DECISION ON PETITION
TO WITHDRAW
FROM RECORD

This is a decision on the Request to Withdraw as attorney or agent of record under 37 C.F.R. § 1.36(b), filed February 25, 2012.

The request is **DISMISSED** as moot.

A review of the file record indicates that the power of attorney to Sprinkle IP Law Group / Zimmer has been revoked by the assignee of the patent application on February 22, 2012. Accordingly, the request to withdraw under 37 C.F.R. § 1.36(b) is moot.

All future communications from the Office will continue to be directed to the below-listed address until otherwise notified by applicant.

Telephone inquires concerning this decision should be directed to undersigned at 571-272-1642.

/AMW/
April M. Wise
Petitions Examiner
Office of Petitions

UNITED STATES PATENT AND TRADEMARK OFFICE

Commissioner for Patents
United States Patent and Trademark Office
P.O. Box 1450
Alexandria, VA 22313-1450
www.uspto.gov

NIXON & VANDERHYE, PC
901 NORTH GLEBE ROAD, 11TH FLOOR
ARLINGTON, VA 22203

MAILED

AUG 01 2011

OFFICE OF PETITIONS

In re Application of
Norman Douglas Bittner
Application No. 13/182,722
Filed: July 14, 2011
Attorney Docket No. AMK-5661-8

ON PETITION

This is a decision on the petition under 37 CFR 1.102(c)(1), filed July 14, 2011, to make the above-identified application special based on applicant's age as set forth in M.P.E.P. § 708.02, Section IV.

The petition is **GRANTED**.

A grantable petition to make an application special under 37 CFR 1.102(c)(1) and MPEP § 708.02, Section IV: Applicant's Age must be accompanied by evidence showing that at least one of the applicants is 65 years of age, or more, such as a birth certificate or a statement by applicant. No fee is required.

The instant petition includes a statement (PTO/SB/130 form) by the applicant's attorney that the applicant is 65 years of age or more. Accordingly, the above-identified application has been accorded "special" status.

Telephone inquiries concerning this decision should be directed to the undersigned at 571-272-6059.

This matter is being referred to the Technology Center Art Unit 3711 for action on the merits commensurate with this decision.

A. Kelley-Collier

Alicia Kelley-Collier
Petitions Examiner
Office of Petitions

UNITED STATES PATENT AND TRADEMARK OFFICE

UNITED STATES DEPARTMENT OF COMMERCE
United States Patent and Trademark Office
Address: COMMISSIONER FOR PATENTS
P.O. Box 1450
Alexandria, Virginia 22313-1450
www.uspto.gov

APPLICATION NO.	FILING DATE	FIRST NAMED INVENTOR	ATTORNEY DOCKET NO.	CONFIRMATION NO.
13/182,767	07/14/2011	Michael J. Riebel	P221444.US.05	7038

25763 7590 08/17/2011

DORSEY & WHITNEY LLP - MINNEAPOLIS
ATTENTION: PATENT PROSECUTION DOCKETING DEPARTMENT
INTELLECTUAL PROPERTY PRACTICE GROUP - PT/23RD FL
50 SOUTH SIXTH STREET, SUITE 1500
MINNEAPOLIS, MN 55402-1498

EXAMINER	
ART UNIT	PAPER NUMBER
1785	

NOTIFICATION DATE	DELIVERY MODE
08/17/2011	ELECTRONIC

Please find below and/or attached an Office communication concerning this application or proceeding.

The time period for reply, if any, is set in the attached communication.

Notice of the Office communication was sent electronically on above-indicated "Notification Date" to the following e-mail address(es):

ip.docket@dorsey.com

UNITED STATES PATENT AND TRADEMARK OFFICE

Commissioner for Patents
United States Patent and Trademark Office
P.O. Box 1450
Alexandria, VA 22313-1450
www.uspto.gov

AUG 17 2011 CST

In re application of :
Michael Riebel et al :
Serial No. 13/182,767 : DECISION ON PETITION
Filed: July 14, 2011 : TO MAKE SPECIAL
For: CELLULOSIC BIOLAMINATE COMPOSITE :
ASSEMBLY AND RELATED METHODS :

This is a decision on the petition filed on July 14, 2011 to make the above-identified application special under the accelerated examination program.

The petition to make the application special is **DISMISSED.**

REGULATION AND PRACTICE

A grantable petition to make special under 37 C.F.R. § 1.102(d) and pursuant to the "Change to Practice for Petitions in Patent Applications to Make Special and for Accelerated Examination" published in the Federal Register on June 26, 2006 (71 Fed. Reg. 36323), must satisfy the following conditions:

I. Conditions Regarding the Application:

1. the application must be a non-reissue utility or design application filed under 37 CFR 1.111(a);

2. the application, the petition and the required fees must be filed electronically using the USPTO's electronic filing system (EFS), or EFS-web; if not filed electronically, a statement asserting that EFS and EFS-web were not available during the normal business hours;

3. at the time of filing, the application must be complete under 37 CFR 1.51 and in condition for examination;

4. the application must contain three or fewer independent claims and twenty or fewer total claims and the claims must be directed to a single invention.

II. Conditions Regarding the Petition:

The petition must:

1. be filed with the application;

2. include a statement that applicant agrees not to separately argue the patentability of any dependent claim during any appeal in the application;

3. include a statement that applicant agrees to make an election without traverse in a telephone interview;

4. include a statement that applicant agrees to conduct such an interview when requested by the examiner;

5. include a statement, made based on a good faith belief, that a preexamination search in compliance with the following requirements, was conducted, including an identification of the field of search by United States class and subclass, where applicable, and for database searches, the search logic or chemical structure or sequence used as a query, the name of the file(s) searched and the database service, and the date of the search.

The preexamination search must:

5.1 involve U.S. patents and patent application publications, foreign patent documents, and non-patent literature, unless the applicant can justify with reasonable certainty that no references more pertinent than those already identified are likely to be found in the eliminated sources and includes such a justification with this statement;

5.2. be directed to the claimed invention and encompass all of the features of the claims, giving the claims the broadest reasonable interpretation;

5.3. encompass the disclosed features that may be claimed.

6. must provide in support of the petition an accelerated examination support document.

An accelerated examination support document must include:

6.1. an information disclosure statement (IDS) in compliance with 37 CFR 1.98 citing each reference deemed most closely related to the subject matter of each of the claims;

6.2. an identification of all the limitations in the claims that are disclosed by the reference specifying where the limitation is disclosed in the cited reference;

6.3. a detailed explanation of how each of the claims are patentable over the references cited with particularity required by 37 CFR 1.111(b) and (c);

6.4. a concise statement of the utility of the invention as defined in each of the independent claims (unless the application is a design application);

6.5. a showing of where each limitation of the claims finds support under 35 USC 112, first paragraph, in the written description of the specification. If applicable, the showing must also identify: (1) each means- (or step) plus-function claim element that invokes consideration under 35 USC 112, sixth paragraph; and (2) the structure, material, or acts in the specification that corresponds to each means- (or step) plus-function claim element that invokes consideration under 35 USC 112, sixth paragraph; if the application claims the benefit of one or more applications under title 35, United States Code, the showing must also include where each limitation of the claims finds support

under 35 USC 112, first paragraph, in each such application in which such supports exists;

6.6. an identification of any cited references that may be disqualified under 35 USC 103(c).

REVIEW OF FACTS

The conditions regarding the application (section I, subsections 1-4) discussed above are considered to have been met. Additionally, the conditions regarding the petition, section II, subsections 1-4, are considered to have been met. However, the petition fails to comply with condition II, subsections 5 and 6.

First, it appears that the search is incomplete. Note that a search in Class 428/subclasses 534 and 535 is also required.

It is noted that petitioner has provided a showing of where each limitation of the claims finds support under 35 USC 112, first paragraph, in the written description of the present specification, and in parent application 13/019,060 (US 2011/0123809), however, it is also required that petitioner provide a showing of where each limitation of the claims finds support under 35 USC 112, first paragraph, in the written description of parent applications 12/410,018, 61/038,971 and 61/364,298, as applicant has claimed priority to these applications. On page 56 of the Accelerated Examination Support Document (AESD), a chart is provided which gives the support in provisional specification (attached as Appendix II). While the coversheet of Appendix II does indicate that the provisional application referred to on page 56 of the AESD is 61/364,298, the specification provided appears to be a continuation-in-part application of application 12/410,018. Clarification as to whether the provisional specification referred to on page 56 of the AESD is 61/364,298 is required.

Accordingly, it is required that petitioner provide a showing of where each limitation of the claims finds support under 35 USC 112, first paragraph, in the written description of parent application 12/410,018, and to the <u>two</u> provisional applications to which applicant has claimed priority.

DECISION

For the above-stated reasons, the petition is dismissed. The application will therefore be taken up by the examiner in its regular turn.

Petitioner is given a single opportunity to perfect the petition. Any request for reconsideration of this decision must be submitted within 1 (one) month or 30 (thirty) days, whichever is longer, (no extension of time under 37 CFR 1.136(a)) from the date

of this decision in order to be considered timely. Any request for reconsideration must address the deficiencies indicated above.

Petitioner is reminded that, upon granting of the special status of the application on request for reconsideration, the application will be processed expeditiously. However, due to the dismissal of the instant petition, examination may not be completed within twelve months of the filing date of the application.

Any inquiry regarding this decision should be directed to Christine Tierney, Quality Assurance Specialist, at (571) 272-1055.

/Christine Tierney/

Christine Tierney
Quality Assurance Specialist
Technology Center 1700

UNITED STATES PATENT AND TRADEMARK OFFICE

UNITED STATES DEPARTMENT OF COMMERCE
United States Patent and Trademark Office
Address: COMMISSIONER FOR PATENTS
P.O. Box 1450
Alexandria, Virginia 22313-1450
www.uspto.gov

APPLICATION NO.	FILING DATE	FIRST NAMED INVENTOR	ATTORNEY DOCKET NO.	CONFIRMATION NO.
13/182,767	07/14/2011	Michael J. Riebel	P221444.US.05	7038

25763 7590 10/05/2011

DORSEY & WHITNEY LLP - MINNEAPOLIS
ATTENTION: PATENT PROSECUTION DOCKETING DEPARTMENT
INTELLECTUAL PROPERTY PRACTICE GROUP - PT/23RD FL
50 SOUTH SIXTH STREET, SUITE 1500
MINNEAPOLIS, MN 55402-1498

EXAMINER	
ART UNIT	PAPER NUMBER
1785	

NOTIFICATION DATE	DELIVERY MODE
10/05/2011	ELECTRONIC

Please find below and/or attached an Office communication concerning this application or proceeding.

The time period for reply, if any, is set in the attached communication.

Notice of the Office communication was sent electronically on above-indicated "Notification Date" to the following e-mail address(es):

ip.docket@dorsey.com

UNITED STATES PATENT AND TRADEMARK OFFICE

Commissioner for Patents
United States Patent and Trademark Office
P.O. Box 1450
Alexandria, VA 22313-1450
www.uspto.gov

CST

OCT 05 2011

In re application of Michael Riebel et al Serial No. 13/182,767 Filed: July 14, 2011 For: CELLULOSIC BIOLAMINATE COMPOSITE ASSEMBLY AND RELATED METHODS	: : : : : : :	DECISION ON PETITION TO MAKE SPECIAL

This is a decision on the Request for Reconsideration of Petition to Make Special under the Accelerated Examination Program filed on September 19, 2011 to make the above-identified application special.

The petition to make the application special is **GRANTED.**

The application is eligible for accelerated examination and the petition complies with the conditions for granting the application special status pursuant to the "Change to Practice for Petitions in Patent Applications to Make Special and for Accelerated Examination" published June 26, 2006, in the Federal Register. (71 Fed. Reg. 36323).

The prosecution of the instant application will be conducted expeditiously according to the following guidelines.

1. The application will be docketed to an examiner and taken up for action within two weeks of the date of this decision.

2. Restriction Practice:
   If the examiner determines that the claims are not directed to a single invention, a telephone request to elect one single invention will be made pursuant to MPEP 812.01. As a prerequisite to the grant of this petition, the applicant has agreed to make an oral election, by telephone, without traverse. If the applicant refuses to make an election without traverse, or the examiner cannot reach the applicant after a reasonable effort, the examiner will treat the first claimed invention (invention defined by claim 1) as having being constructively elected without traverse for examination.

3. Office action:
   If it is determined that, after appropriate consultation, there is a potential rejection or any other issue to be addressed, the examiner will telephone the applicant and arrange an interview to discuss and resolve the issue. An Office action, other than a Notice of Allowance and Fee(s) Due (Notice of Allowance), will not be issued unless either: 1) an interview was conducted but did not result in agreed to action that places the application in condition for allowance, or, 2) a determination is made that an interview would be unlikely to result in the application being placed in condition for allowance, and 3) an internal conference has been held to review any rejection of any claim.

4. Time for Reply:
   An Office action other than a Notice of Allowance or a final Office action will set a shortened statutory period of one month or thirty days, whichever is longer, for reply with no extension of time available under 37 CFR 1.136(a). Failure to timely file a reply within this non-extendible period for reply will result in the abandonment of the application.

5. Reply by Applicant:
   A timely reply to an Office action other than the Notice of Allowance must be submitted electronically via EFS or EFS-web and limited to addressing the rejections, objections and requirement made. Any amendment that attempts to: 1) add claims which would result in more than three pending independent claims or more than twenty pending total claims; 2) present claims not encompassed by the pre-examination search or an updated accelerated examination support document; or 3) present claims that are directed a non-elected invention or an invention other than that previously claimed and examined in the application, will be treated as not fully responsive and will not be entered.

   For any amendment to the claims (including any new claim) that is not encompassed by the accelerated examination support document, applicant must provide an updated accelerated examination support document that encompasses the amended or new claims at the time of filing of the amendment.

   To proceed expeditiously with the examination, it is recommended that a reply with amendments made to any claim or with any new claim being added be accompanied by an updated accelerated examination support document or a statement explaining how the amended or new claim is supported by the original accelerated examination support document.

6. Information Disclosure Statement (IDS):
   Any IDS filed during prosecution must be submitted electronically via EFS or EFS-web, accompanied by an updated accelerated examination support document, and be in compliance with 37 CFR 1.97 and 1.98.

7. Post-Allowance Processing:
   To expedite processing of the allowed application into a patent, the applicant must: 1) pay the required fees within one month of the date of the Notice of Allowance, and 2) not file any post allowance papers not required by the Office. In no event may the issue fee be paid and accepted later than three months from the date of the Notice of Allowance.

8. After-Final and Appeal Procedures:
   To expedite prosecution, after receiving the final Office action, applicant must: 1) promptly file a notice of appeal, an appeal brief and appeal fees; and 2) not request a pre-appeal brief conference.

   Any amendment, affidavit or other evidence filed after final Office action must comply with applicable rules and the requirements outlined in numbered paragraphs 5 and 6 above.

   On appeal, the application will proceed according to normal appeal procedures. After appeal, the application will again be treated special.

9. Proceedings Outside the Normal Examination Process:
   If the application becomes involved in a proceeding that is outside the normal examination process (e.g., a secrecy order, national security review, interference proceeding, petitions under 37 CFR 1.181, 182 or 183), the application will be treated special before and after such proceeding.

10. Final Disposition:
    The twelve month goal of this accelerated examination procedure ends with a final disposition. The mailing of a final Office action, a Notice of Allowance, the filing of a Notice of Appeal, or the filing of a Request for Continued Examination (RCE) is the final disposition.

If, during prosecution, a paper is not filed electronically using EFS-web, a reply is filed but is not fully responsive, the application is involved in an appeal, or a proceeding outside normal examination process, the application will still be examined expeditiously, however, the final disposition may occur more than twelve months from the filing of the application.

Any inquiry regarding this decision should be directed to Christine Tierney, Quality Assurance Specialist, at (571) 272-1055.

/Christine Tierney/

Christine Tierney
Quality Assurance Specialist
Technology Center 1700

Doc Code: PET.GREEN
Document Description: Petition for Green Tech Pilot

PTO/SB/420 (03-11)

PETITION TO MAKE SPECIAL UNDER THE GREEN TECHNOLOGY PILOT PROGRAM

Attorney Docket Number: 20062.0022USU1	Application Number (if known): Unknown	Filing date: Herewith

First Named Inventor: Attlesey

Title: EXTRUDED SERVER CASE

APPLICANT HEREBY REQUESTS TO PARTICIPATE IN THE GREEN TECHNOLOGY PILOT PROGRAM FOR THE ABOVE-IDENTIFIED APPLICATION. See Instruction Sheet on page 2.

This petition must be timely filed electronically using the USPTO electronic filing system, EFS-Web.

1. By filing this petition:

   Applicant is requesting early publication: Applicant hereby requests early publication under 37 CFR 1.219 and the publication fee set forth in 37 CFR 1.18(d) accompanies this request.

2. By filing this petition: applicant is agreeing to make an election without traverse in a telephonic interview and elect an invention that meets the eligibility requirements for the Green Technology Pilot Program, if the Office determines that the claims are not obviously directed to a single invention. See Instruction Sheet.

3. This request is accompanied by statements of special status for the eligibility requirement.

4. The application contains no more than three (3) independent claims and twenty (20) total claims.

5. The application does not contain any multiple dependent claims.

6. Other attachments: "Rittal White Paper 507: Understanding Data Center Cooling Energy Usage & Reduction Methods"

Signature /James A. Larson/	Date July 14, 2011
Name (Print/Typed) James A. Larson	Registration Number 40,443

Note: *Signatures of all the inventors or assignees of record of the entire interest or their representative(s) are required in accordance with 37 CFR 1.33 and 11.18. Please see 37 CFR 1.4(d) for the form of the signature. If necessary, submit multiple forms for more than one signature, see below*.*

■ *Total of 1 forms are submitted.

If you need assistance in completing the form, call 1-800-PTO-9199 and select option 2.

Instruction Sheet for
Petition to Make Special Under the Green Technology Pilot Program

(Not to be Submitted to the USPTO)

The following is a summary of the requirements (for more information see the notices (i) "Pilot Program for Green Technologies Including Greenhouse Gas Reduction," (ii) "Elimination of Classification Requirement in the Green Technology Pilot Program," and (iii) "Expansion and Extension of the Green Technology Pilot Program," available on the USPTO web site at http://www.uspto.gov/patents/init_events/green_tech.jsp):

(1) The application must be a non-reissue, non-provisional utility application filed under 35 U.S.C. 111(a), or an international application that has entered the national stage in compliance with 35 U.S.C. 371, irrespective of the filing date of the application. Reexamination proceedings are excluded from this pilot program.

(2) The application must contain three or fewer independent claims and twenty or fewer total claims. The application must not contain any multiple dependent claims. For an application that contains more than three independent claims or twenty total claims, or multiple dependent claims, applicant must file a preliminary amendment in compliance with 37 CFR 1.121 to cancel the excess claims and/or the multiple dependent claims at the time the petition to make special is filed.

(3) The claims must be directed to a single invention that materially enhances the quality of the environment, or that materially contributes to: (1) the discovery or development of renewable energy resources; (2) the more efficient utilization and conservation of energy resources; or (3) green house gas emission reduction (see the eligibility requirements of sections II and III of the notice (i) cited above). The petition must include a statement that, if the USPTO determines that the claims are directed to multiple inventions (e.g., in a restriction requirement), applicant will agree to make an election without traverse in a telephonic interview, and elect an invention that meets the eligibility requirements in section II or III of the notice (i) cited above.

(4) The petition to make special must be timely filed electronically using the USPTO electronic filing system, EFS-Web, and selecting the document description of "Petition for Green Tech Pilot" on the EFS-Web screen. Applicant should use form PTO/SB/420, which is available as a Portable Document Format (PDF) fillable form in EFS-Web and on the USPTO Web site.

(5) The petition to make special must be filed at least one day prior to the date that a first Office action (which may be an Office action containing only a restriction requirement) appears in the Patent Application Information Retrieval (PAIR) system. Applicant may check the status of the application using PAIR.

(6) The petition to make special must be accompanied by a request for early publication in compliance with 37 CFR 1.219 and the publication fee set forth in 37 CFR 1.18(d).

Privacy Act Statement

The **Privacy Act of 1974 (P.L. 93-579)** requires that you be given certain information in connection with your submission of the attached form related to a patent application or patent. Accordingly, pursuant to the requirements of the Act, please be advised that: (1) the general authority for the collection of this information is 35 U.S.C. 2(b)(2); (2) furnishing of the information solicited is voluntary; and (3) the principal purpose for which the information is used by the U.S. Patent and Trademark Office is to process and/or examine your submission related to a patent application or patent. If you do not furnish the requested information, the U.S. Patent and Trademark Office may not be able to process and/or examine your submission, which may result in termination of proceedings or abandonment of the application or expiration of the patent.

The information provided by you in this form will be subject to the following routine uses:

1. The information on this form will be treated confidentially to the extent allowed under the Freedom of Information Act (5 U.S.C. 552) and the Privacy Act (5 U.S.C 552a). Records from this system of records may be disclosed to the Department of Justice to determine whether disclosure of these records is required by the Freedom of Information Act.
2. A record from this system of records may be disclosed, as a routine use, in the course of presenting evidence to a court, magistrate, or administrative tribunal, including disclosures to opposing counsel in the course of settlement negotiations.
3. A record in this system of records may be disclosed, as a routine use, to a Member of Congress submitting a request involving an individual, to whom the record pertains, when the individual has requested assistance from the Member with respect to the subject matter of the record.
4. A record in this system of records may be disclosed, as a routine use, to a contractor of the Agency having need for the information in order to perform a contract. Recipients of information shall be required to comply with the requirements of the Privacy Act of 1974, as amended, pursuant to 5 U.S.C. 552a(m).
5. A record related to an International Application filed under the Patent Cooperation Treaty in this system of records may be disclosed, as a routine use, to the International Bureau of the World Intellectual Property Organization, pursuant to the Patent Cooperation Treaty.
6. A record in this system of records may be disclosed, as a routine use, to another federal agency for purposes of National Security review (35 U.S.C. 181) and for review pursuant to the Atomic Energy Act (42 U.S.C. 218(c)).
7. A record from this system of records may be disclosed, as a routine use, to the Administrator, General Services, or his/her designee, during an inspection of records conducted by GSA as part of that agency's responsibility to recommend improvements in records management practices and programs, under authority of 44 U.S.C. 2904 and 2906. Such disclosure shall be made in accordance with the GSA regulations governing inspection of records for this purpose, and any other relevant (*i.e.*, GSA or Commerce) directive. Such disclosure shall not be used to make determinations about individuals.
8. A record from this system of records may be disclosed, as a routine use, to the public after either publication of the application pursuant to 35 U.S.C. 122(b) or issuance of a patent pursuant to 35 U.S.C. 151. Further, a record may be disclosed, subject to the limitations of 37 CFR 1.14, as a routine use, to the public if the record was filed in an application which became abandoned or in which the proceedings were terminated and which application is referenced by either a published application, an application open to public inspection or an issued patent.
9. A record from this system of records may be disclosed, as a routine use, to a Federal, State, or local law enforcement agency, if the USPTO becomes aware of a violation or potential violation of law or regulation.

UNITED STATES PATENT AND TRADEMARK OFFICE

UNITED STATES DEPARTMENT OF COMMERCE
United States Patent and Trademark Office
Address: COMMISSIONER FOR PATENTS
P.O. Box 1450
Alexandria, Virginia 22313-1450
www.uspto.gov

APPLICATION NO.	FILING DATE	FIRST NAMED INVENTOR	ATTORNEY DOCKET NO.	CONFIRMATION NO.
13/182,866	07/14/2011	Chad Daniel ATTLESEY	20062.0022USU1	7217

52835 7590 09/06/2011

HAMRE, SCHUMANN, MUELLER & LARSON, P.C.
P.O. BOX 2902
MINNEAPOLIS, MN 55402-0902

EXAMINER	
ART UNIT	PAPER NUMBER
2835	

MAIL DATE	DELIVERY MODE
09/06/2011	PAPER

Please find below and/or attached an Office communication concerning this application or proceeding.

The time period for reply, if any, is set in the attached communication.

UNITED STATES PATENT AND TRADEMARK OFFICE

Commissioner for Patents
United States Patent and Trademark Office
P.O. Box 1450
Alexandria, VA 22313-1450
www.uspto.gov

HAMRE, SCHUMANN, MUELLER & LARSON, P.C.
P.O. BOX 2902
MINNEAPOLIS MN 55402-0902

In re Application of	:	
ATTLESEY, Chad	:	DECISION ON PETITION
Application No. 13/182866	:	TO MAKE SPECIAL UNDER
Filed: July 14, 2011	:	THE GREEN TECHNOLOGY
Attorney Docket No. 20062.0022USU1	:	PILOT PROGRAM

This is a decision on the petition under 37 CFR 1.102, filed on July 14, 2011, to make the above-identified application special under the pilot program for applications pertaining to Green Technologies as set forth 74 Federal Register Notice 64666 (December 8, 2009) and amended by 75 Federal Register Notice 28554 (May 21, 2010) and 75 Federal Register Notice 69049 (November 10, 2010).

The petition is **GRANTED**.

A grantable petition to make an application special under 37 CFR 1.102 and the pilot program as set forth in 74 FR 64666 must be directed to a nonprovisional application filed under 35 USC 111(a) or be a national stage entry under 35 USC 371, exclusive of any reissue applications.

In order to qualify for special status, the following requirements must be met. 1) The application must have no more than 3 independent claims and no more than 20 total claims. 2) The application must not contain any multiple dependent claims. 3) The petition must state the basis for seeking special status, i.e., the claimed invention either: A) materially enhances the quality of the environment or B) materially contributes to: i) the discovery or development of renewable energy resources, ii) the more efficient utilization and conservation of energy resources, or iii) greenhouse gas emission reduction. 4) If the disclosure is not clear on its face that the claimed invention materially contributes under category (A) or (B), the petition must be accompanied by a statement by the applicant, assignee, or an attorney/agent registered to practice before the Office explaining how the materiality standard is met. 5) A statement that applicant will agree to make an election without traverse in a telephonic interview if a restriction requirement is made by the examiner. 6) The petition to make special must be filed electronically. 7) The petition must be filed at least one day prior to the date that a first Office Action appears in the Patent Application Information Retrieval (PAIR) system. 8) The petition must be accompanied by a request for early publication in compliance with 37 CFR 1.219 and include the publication fee as set forth in 37 CFR 1.18(d).

The requirement for a fee for consideration of the petition to make special for applications pertaining to Green Technologies has been waived.

The instant petition complies with items 1 – 8 above. Accordingly, the above-identified application has been accorded "special" status.

Telephone inquires concerning this decision should be directed to Colleen Dunn at 571-272-1170.

The application is being forwarded to the appropriate Technology Center Art Unit for action on the merits commensurate with this decision.

/Colleen Dunn/

Colleen Dunn
Quality Assurance Specialist
Technology Center 2800

UNITED STATES PATENT AND TRADEMARK OFFICE

Commissioner for Patents
United States Patent and Trademark Office
P.O. Box 1450
Alexandria, VA 22313-1450
www.uspto.gov

In re Application of
George OLAH

Application No. 13182894

Filed: July 14,2011

Attorney Docket No. 5603-04-10

:
:
:DECISION ON PETITION TO MAKE SPECIAL
:UNDER 37 CFR 1.102(c)(1)
:

This is a decision on the electronic petition under 37 CFR 1.102 (c)(1), filed 29-SEP-2011 to make the above-identified application special based on applicant's age as set forth in MPEP § 708.02, Section IV.

The petition is **GRANTED**.

A grantable petition to make an application special under 37 CFR 1.102(c)(1), MPEP § 708.02, Section IV: Applicant's Age must include a statement by applicant or a registered practitioner having evidence that applicant is at least 65 years of age. No fee is required.

Accordingly, the above-identified application has been accorded "special" status and will be taken up for action by the examiner upon the completion of all pre-examination processing.

Telephone inquiries concerning this electronic decision should be directed to the Electronic Business Center at 866-217-9197.

All other inquiries concerning either the examination or status of the application should be directed to the Technology Center.

Doc code : PET.OP.AGE
Description : Petition to make special based on Age/Health

PTO/SB/130 (07-09)
Approved for use through 07/31/2012. OMB 0651- 0031
U.S. Patent and Trademark Office; U.S. DEPARTMENT OF COMMERCE
Under the Paperwork Reduction Act of 1995, no persons are required to respond to a collection of information unless it contains a valid OMB control number

PETITION TO MAKE SPECIAL BASED ON AGE FOR ADVANCEMENT OF EXAMINATION UNDER 37 CFR 1.102(c)(1)

Application Information

Application Number	13/182,894	Confirmation Number	7266	Filing Date	2011-07-14
Attorney Docket Number (optional)	5603-04-10	Art Unit	2612	Examiner	
First Named Inventor	OLAH, George				
Title of Invention	WIRELESS OBJECT LOCALIZATION AND REGISTRATION SYSTEM AND METHOD				

Attention: Office of Petitions

An application may be made special for advancement of examination upon filing of a petition showing that the applicant is 65 years of age, or more. No fee is required with such a petition. See 37 CFR 1.102(c)(1) and MPEP 708.02 (IV).

APPLICANT HEREBY PETITIONS TO MAKE SPECIAL FOR ADVANCEMENT OF EXAMINATION IN THIS APPLICATION UNDER 37 CFR 1.102(c)(1) and MPEP 708.02 (IV) ON THE BASIS OF THE APPLICANT'S AGE.

A grantable petition requires one of the following items:
(1) Statement by one named inventor in the application that he/she is 65 years of age, or more; or
(2) Certification by a registered attorney/agent having evidence such as a birth certificate, passport, driver's license, etc. showing one named inventor in the application is 65 years of age, or more.

Name of Inventor who is 65 years of age, or older

Given Name	Middle Name	Family Name	Suffix
George		OLAH	

A signature of the applicant or representative is required in accordance with 37 CFR 1.33 and 10.18. Please see 37 CFR 1.4(d) for the format of the signature.

Select (1) or (2) :

○ (1) I am an inventor in this application and I am 65 years of age, or more.

◉ (2) I am an attorney or agent registered to practice before the Patent and Trademark Office, and I certify that I am in possession of evidence, and will retain such in the application file record, showing that the inventor listed above is 65 years of age, or more.

Signature	/Sheema Khan/	Date (YYYY-MM-DD)	2011-09-29
Name	Sheema Khan	Registration Number	57969

PTO/SB/130 (07-09)
Approved for use through 07/31/2012. OMB 0651- 0031
U.S. Patent and Trademark Office; U.S. DEPARTMENT OF COMMERCE
Under the Paperwork Reduction Act of 1995, no persons are required to respond to a collection of information unless it contains a valid OMB control number

Privacy Act Statement

The Privacy Act of 1974 (P.L. 93-579) requires that you be given certain information in connection with your submission of the attached form related to a patent application or patent. Accordingly, pursuant to the requirements of the Act, please be advised that: (1) the general authority for the collection of this information is 35 U.S.C. 2(b)(2); (2) furnishing of the information solicited is voluntary; and (3) the principal purpose for which the information is used by the U.S. Patent and Trademark Office is to process and/or examine your submission related to a patent application or patent. If you do not furnish the requested information, the U.S. Patent and Trademark Office may not be able to process and/or examine your submission, which may result in termination of proceedings or abandonment of the application or expiration of the patent.

The information provided by you in this form will be subject to the following routine uses:

1. The information on this form will be treated confidentially to the extent allowed under the Freedom of Information Act (5 U.S.C. 552) and the Privacy Act (5 U.S.C. 552a). Records from this system of records may be disclosed to the Department of Justice to determine whether the Fr eedom of Information Act requires disclosure of these records.

2. A record from this system of records may be disclosed, as a routine use, in the course of presenting evidence to a court, magistrate, or administrative tribunal, including disclosures to opposing counsel in the course of settlement negotiations.

3. A record in this system of records may be disclosed, as a routine use, to a Member of Congress submitting a request involving an individual, to whom the record pertains, when the individual has requested assistance from the Member with respect to the subject matter of the record.

4. A record in this system of records may be disclosed, as a routine use, to a contractor of the Agency having need for the information in order to perform a contract. Recipients of information shall be required to comply with the requirements of the Privacy Act of 1974, as amended, pursuant to 5 U.S.C. 552a(m).

5. A record related to an International Application filed under the Patent Cooperation Treaty in this system of records may be disclosed, as a routine use, to the International Bureau of the World Intellectual Property Organization, pursuant to the Patent Cooperation Treaty.

6. A record in this system of records may be disclosed, as a routine use, to another federal agency for purposes of National Security review (35 U.S.C. 181) and for review pursuant to the Atomic Energy Act (42 U.S.C. 218(c)).

7. A record from this system of records may be disclosed, as a routine use, to the Administrator, General Services, or his/her designee, during an inspection of records conducted by GSA as part of that agency's responsibility to recommend improvements in records management practices and programs, under authority of 44 U.S.C. 2904 and 2906. Such disclosure shall be made in accordance with the GSA regulations governing inspection of records for this purpose, and any other relevant (i.e., GSA or Commerce) directive. Such disclosure shall not be used to make determinations about indivi duals.

8. A record from this system of records may be disclosed, as a routine use, to the public after either publication of the application pursuant to 35 U.S.C. 122(b) or issuance of a patent pursuant to 35 U.S.C. 151. Further, a record may be disclosed, subject to the limitations of 37 CFR 1.14, as a routine use, to the public if the record was filed in an application which became abandoned or in which the proceedings were terminated and which application is referenced by either a published application, an application open to public inspections or an issued patent.

9. A record from this system of records may be disclosed, as a routine use, to a Federal, State, or local law enforcement agency, if the USPTO becomes aware of a violation or potential violation of law or regulation.

UNITED STATES PATENT AND TRADEMARK OFFICE

Commissioner for Patents
United States Patent and Trademark Office
P.O. Box 1450
Alexandria, VA 22313-1450
www.uspto.gov

DYAX CORP.
C/O WOLF, GREENFIELD & SACKS, P.C.
600 ATLANTIC AVENUE
BOSTON, MA 02210-2206

MAILED
APR 09 2012
OFFICE OF PETITIONS

In re Application of Dransfield et al. :
Application No. 13/182,895 :
Filing Date: July 14, 2011 : Decision on Request
Attorney Docket No. D0617.70013US04 :
Pub. No. US 2011/0311446 A1 :
Pub. Date: December 22, 2011 :

This is a decision on the request for a corrected patent application publication under 37 C.F.R. § 1.221(b) filed January 6, 2012.

The request is **dismissed**.

Applicants request the application be republished because of the mistake in the patent application publication identified in the request.

37 C.F.R. § 1.221(b) states,

> [Relief under 37 C.F.R. § 1.221 is warranted] only when the Office makes a material mistake which is apparent from Office records.... Any request for corrected publication or revised patent application publication other than provided in paragraph (a) of this section must be filed within two months from the date of the patent application publication. This period is not extendable.

A mistake is only a "material" mistake if the mistake affects the public's ability to appreciate the technical disclosure of the patent application publication, determine the scope of the patent application publication, or determine the scope of the provisional rights that an applicant may seek to enforce upon issuance of a patent.[1]

The error due to faulty optical character recognition is, in this case, not Office error. The error is due to the quality of the text, which makes it difficult to electronically reproduce by digital

[1] *See* Changes to Implement Eighteen-Month Publication of Patent Applications; Final Rule, 65 Fed. Reg. 57023, 57038 (Sept. 20, 2000), 1239 Off. Gaz. Pat. Office 63, 75 (Oct. 10, 2000). *See also* Section 1130 of the Manual of Patent Examining Procedure (8th ed., Rev. 8, July 2010).

imaging and optical character recognition. See 37 CFR 1.52(a)(1)(v), which states that all papers that are to become a permanent part of Office records must be presented "in a form having sufficient clarity and contrast between the paper and the writing to permit . . . electronic capture by use of digital imaging and optical character recognition." As set forth at MPEP 1121, "applications with poor quality text, which may be acceptable for scanning and examination purposes, may lead to errors in the patent application publication. Correction of these errors and inclusion of any desired amendments into the text of the originally-filed specification and drawings will only occur if applicant files a request for republication under 37 CFR 1.221(a). They will not be corrected by the Office in a corrected publication under 37 CFR 1.221(b)."

Applicants are advised that a "request for republication of an application previously published" may be filed under 37 C.F.R. § 1.221(a). The request must include a copy of the application, which complies with the Office's electronic filing system requirements, the publication fee set forth in 37 C.F.R. § 1.18(d), and the required processing fee set forth in 37 C.F.R. § 1.17(i).

If the request for republication does not comply with the electronic filing system requirements, the republication will not take place and the publication fee set forth in 37 C.F.R. § 1.18(d) will be refunded. However, the processing fee will be retained.

Guidance for filing a request for a Pre-Grant Publication, such as a request for republication, may be found at the links below:

http://www.uspto.gov/patents/process/file/efs/guidance/index.jsp

http://www.uspto.gov/ebc/portal/efs/pgpub_quickstart.pdf

Any request for republication under 37 C.F.R. § 1.221(a), must be submitted via the EFS system as a "Pre-Grant Publication" and questions or any request for reconsideration of the instant decision should be addressed as follows:

By mail to: Mail Stop PGPUB
Commissioner for Patents
P.O. Box 1450
Alexandria, Va. 22313-1450

Telephone inquiries regarding this communication should be directed to Senior Petitions Attorney Steven Brantley at (571) 272-3203.

Christopher Bottorff
Petitions Examiner
Office of Petitions

UNITED STATES PATENT AND TRADEMARK OFFICE

Commissioner for Patents
United States Patent and Trademark Office
P.O. Box 1450
Alexandria, VA 22313-1450
www.uspto.gov

THOMAS, KAYDEN, HORSTEMEYER & RISLEY, LLP
400 INTERSTATE NORTH PARKWAY SE
SUITE 1500
ATLANTA GA 30339

MAILED

SEP 21 2011

OFFICE OF PETITIONS

In re Application of :
Heer, et al. :
Application No. 13/182,984 :
Deposited: July 14, 2011 :
Attorney Docket No. 051831-1180 :

ON PETITION

This is a decision on the petition under 37 CFR 1.57(a), filed September 13, 2011, requesting that the above-identified application be accorded a filing date of July 14, 2011, adding the drawings from German Application No. DE 10 2010 031 306.8, filed July 14, 2010.

The petition under 37 CFR 1.57(a) is **DISMISSED**.

Any reconsideration petition should be filed within two (2) months of the mail date of this decision on petition.

The application was deposited on July 14, 2011. A Notice of Incomplete Nonprovisional Application was mailed on July 27, 2011.

Petitioners filed the present petition in response on September 13, 2011. Petitioners state that drawings were inadvertently omitted from the application deposited on July 14, 2011, but because the ADS and declaration filed with the application deposited on July 14, 2011 contains a claim for benefit of priority under 37 CFR 1.55 to German Application No. DE 10 2010 031 306.8, filed July 14, 2010, that petitioners are permitted to amend the above-identified application to include the drawings and thereby, obtain a July 14, 2011 filing date for the application.

The applicable rule provides (in pertinent part):

§ 1.57 Incorporation by reference.

(a) Subject to the conditions and requirements of this paragraph, if all or a portion of the specification or drawing(s) is inadvertently omitted from an application, but the application contains a claim under § 1.55 for priority of a prior-filed foreign application, or a claim under § 1.78 for the benefit of a prior-filed provisional, nonprovisional, or international application, that was present on the filing date of the application, and the inadvertently omitted portion of the specification or drawing(s) is completely contained in the prior-filed application, the claim under § 1.55 or § 1.78 shall also be considered an incorporation by reference of the prior-filed application as to the inadvertently omitted portion of the specification or drawing(s).

(1) The application must be amended to include the inadvertently omitted portion of the specification or drawing(s) within any time period set by the Office, but in no case later than the close of prosecution as defined by § 1.114(b), or abandonment of the application, whichever occurs earlier. The applicant is also required to:

(i) Supply a copy of the prior-filed application, except where the prior-filed application is an application filed under 35 U.S.C. 111;

(ii) Supply an English language translation of any prior-filed application that is in a language other than English; and

(iii) Identify where the inadvertently omitted portion of the specification or drawings can be found in the prior-filed application.

...

(3) If an application is not otherwise entitled to a filing date under § 1.53(b), the amendment must be by way of a petition pursuant to this paragraph accompanied by the fee set forth in § 1.17(f).

The petition is dismissed because while petitioners did **not** file a formal amendment to add the drawings. Both an amendment adding the material and a petition are required under 37 CFR 1.57(a). MPEP 201.17 Incorporation by Reference under 37 CFR 1.57(a).

Further correspondence with respect to this matter should be delivered through one of the following mediums:

By mail:	Mail Stop PETITIONS Commissioner for Patents Post Office Box 1450 Alexandria, VA 22313-1450
By hand:	Customer Service Window Mail Stop Petitions Randolph Building 401 Dulany Street Alexandria, VA 22314
By fax:	(571) 273-8300 ATTN: Office of Petitions
By internet:	EFS-Web www.uspto.gov/ebc/efs_help.html (for help using EFS-Web call the Patent Electronic Business Center at (866) 217-9197)

Telephone inquiries concerning this matter may be directed to Petitions Attorney Shirene Willis Brantley at (571) 272-3230.

Chris Bottorff
Supervisor
Office of Petitions

UNITED STATES PATENT AND TRADEMARK OFFICE

Commissioner for Patents
United States Patent and Trademark Office
P.O. Box 1450
Alexandria, VA 22313-1450
www.uspto.gov

THOMAS, KAYDEN, HORSTEMEYER & RISLEY, LLP
400 INTERSTATE NORTH PARKWAY SE
SUITE 1500
ATLANTA GA 30339

MAILED
OCT 14 2011
OFFICE OF PETITIONS

In re Application of :
Heer, et al. :
Application No. 13/182,984 : ON PETITION
Deposited: July 14, 2011 :
Attorney Docket No. 051831-1180 :

This is a decision on the renewed petition under 37 CFR 1.57(a), filed September 27, 2011, requesting that the above-identified application be accorded a filing date of July 14, 2011, adding the drawings from German Application No. DE 10 2010 031 306.8, filed July 14, 2010.

The petition under 37 CFR 1.57(a) is **GRANTED**.

The application was deposited on July 14, 2011. A Notice of Incomplete Nonprovisional Application was mailed on July 27, 2011.

A petition under 37 CFR 1.57(a), filed September 13, 2011, was dismissed on September 21, 2011. The present renewed petition was filed on September 27, 2011.

Petitioners state that drawings were inadvertently omitted from the application deposited on July 14, 2011, but because the ADS and declaration filed with the application deposited on July 14, 2011 contains a claim for benefit of priority under 37 CFR 1.55 to German Application No. DE 10 2010 031 306.8, filed July 14, 2010, that petitioners are permitted to amend the above-identified application to include the drawings and thereby, obtain a July 14, 2011 filing date for the application.

The applicable rule provides (in pertinent part):

§ 1.57 Incorporation by reference.

(a) Subject to the conditions and requirements of this paragraph, if all or a portion of the specification or drawing(s) is inadvertently omitted from an application, but the application contains a claim under § 1.55 for priority of a prior-filed foreign application, or a claim under § 1.78 for the benefit of a prior-filed provisional, nonprovisional, or international application, that was present on the filing date of the application, and the inadvertently omitted portion of the specification or drawing(s) is completely contained in the prior-filed application, the claim under § 1.55 or § 1.78 shall also be considered an incorporation by reference of the prior-filed application as to the inadvertently omitted portion of the specification or drawing(s).

(1) The application must be amended to include the inadvertently omitted portion of the specification or drawing(s) within any time period set by the Office, but in no case later than the close of prosecution as defined by § 1.114(b), or abandonment of the application, whichever occurs earlier. The applicant is also required to:

(i) Supply a copy of the prior-filed application, except where the prior-filed application is an application filed under 35 U.S.C. 111;

(ii) Supply an English language translation of any prior-filed application that is in a language other than English; and

(iii) Identify where the inadvertently omitted portion of the specification or drawings can be found in the prior-filed application.

...

(3) If an application is not otherwise entitled to a filing date under § 1.53(b), the amendment must be by way of a petition pursuant to this paragraph accompanied by the fee set forth in § 1.17(f).

It is noted that the application as filed included a claim under 1.55 for the benefit of German Application No. DE 10 2010 031 306.8, filed July 14, 2010. Thus, pursuant to 1.57, the application as filed is considered to have incorporated by reference the prior filed application as to the inadvertently omitted drawings.

Petitioners have filed an amendment adding the inadvertently omitted drawings, a copy of the prior-filed application, an English language translation of the application, an identification of where the inadvertently omitted drawings may be found in the prior-filed application, and the $400.00 petition fee.

Regarding fees, petitioners have paid two $400.00 petition fees. Only one petition fee is required. Petitioners' credit card will be credited the $400.00 paid on September 27, 2011.

In view of the incorporation by reference of the prior application, the drawings supplied on September 27, 2011, would not constitute new matter if they were a part of the original disclosure of the prior application. Of course, the examiner is expected to compare the drawings supplied on September 27, 2011, to the drawings in German Application No. DE 10 2010 031 306.8 in order to verify that the drawings are accurate copies of the prior drawings and that they contain no new matter.

In view thereof, the petition is **GRANTED**.

The application is being forwarded to the Office of Patent Application Processing (OPAP) for according of a filing date of July 14, 2011, including the copy of the drawings from the prior application, which were supplied on September 27, 2011. Applicants will receive appropriate notifications regarding the fees owed, if any, and other information in due course from OPAP.

Telephone inquiries concerning this matter may be directed to Petitions Attorney Shirene Willis Brantley at (571) 272-3230.

Chris Bottorff
Supervisor
Office of Petitions

UNITED STATES PATENT AND TRADEMARK OFFICE

Commissioner for Patents
United States Patent and Trademark Office
P.O. Box 1450
Alexandria, VA 22313-1450
www.uspto.gov

GIFFORD, KRASS, SPRINKLE, ANDERSON
& CITKOWSKI, P.C
PO BOX 7021
TROY, MI 48007-7021

MAILED
APR 0 9 2012
OFFICE OF PETITIONS

In re Application of
Raphael Mourad
Application No. 13/183,039
Filed: July 14, 2011
Attorney Docket No. MRB-10002/03

DECISION ON PETITION
TO MAKE SPECIAL UNDER
37 CFR 1.102(c)(1)

This is a decision on the petition under 37 CFR 1.102(c)(1), filed March 23, 2012, to make the above-identified application special based on applicant's age as set forth in M.P.E.P. § 708.02, Section IV.

The petition is **GRANTED**.

A grantable petition to make an application special under 37 CFR 1.102(c)(1) and MPEP § 708.02, Section IV: Applicant's Age must be accompanied by evidence showing that at least one of the applicants is 65 years of age, or more, such as a birth certificate or a statement by applicant. No fee is required

The instant petition includes a statement from applicant's representative that he is in possession of proof of applicant's age. Accordingly, the above-identified application has been accorded "special" status.

Telephone inquiries concerning this decision should be directed to undersigned at 571-272-1642.

All other inquiries concerning either the examination or status of the application should be directed to the Technology Center.

The application is being forwarded to the Technology Center Art Unit 3711 for action on the merits commensurate with this decision.

/AMW/
April M. Wise
Petitions Examiner
Office of Petitions

UNITED STATES PATENT AND TRADEMARK OFFICE

Commissioner for Patents
United States Patent and Trademark Office
P.O. Box 1450
Alexandria, VA 22313-1450
www.uspto.gov

OCT 0 3 2011

MEADWESTVACO CORPORATION
ATTN: IP LAW GROUP - PATENTS
501 South 5th Street, 3rd Floor
Richmond VA 23219-0501

In re Application of: Zhiquan Yan	:	
Application No.: 13/183106	:	DECISION ON PETITION TO
Filed: July 14, 2011	:	MAKE SPECIAL FOR NEW
Title: HERMETICALLY SEALED PAPERBOARD	:	APPLICATION UNDER 37
CONTAINER WITH ENHANCED BARRIER	:	C.F.R. § 1.102 & M.P.E.P. §
PERFORMANCE	:	708.02

This is a decision on the petition filed on July 14, 2011 to make the above-identified application special for accelerated examination procedure under 37 C.F.R. § 1.102(d).

The petition to make the application special is **DISMISSED**.

REGULATION AND PRACTICE

A grantable petition to make special under 37 C.F.R. § 1.102(d) and pursuant to the "Change to Practice for Petitions in Patent Applications to Make Special and for Accelerated Examination" published in the Federal Register on June 26, 2006 (71 Fed. Reg. 36323), must satisfy the following conditions:

I. Conditions Regarding the Application:

1. the application must be a non-reissue utility or design application filed under 37 CFR 1.111(a);

2. the application, the petition and the required fees must be filed electronically using the USPTO's electronic filing system (EFS), or EFS-web; if not filed electronically, a statement asserting that EFS and EFS-web were not available during the normal business hours.

3. at the time of filing, the application must be complete under 37 CFR 1.51 and in condition for examination;

4. the application must contain three or fewer independent claims and twenty or fewer total claims and the claims must be directed to a single invention.

II. Conditions Regarding the Petition:

The petition must:

1. be filed with the application;

2. include a statement that applicant agrees not to separately argue the patentability of any independent claim during any appeal in the application;

3. include a statement that applicant agrees to make an election without traverse in a telephone interview.

4. include a statement that applicant agrees to conduct such an interview when requested by the examiner.

5. include a statement, made based on a good faith belief, that a preexamination search in compliance with the following requirements, was conducted, including an identification of the field of search by United States class and subclass, where applicable, and for database searches, the search logic or chemical structure or sequence used as a query, the name of the file(s) searched and the database service, and the date of the search.

The preexamination search must:

5.1 involve U.S. patents and patent application publications, foreign patent documents, and non-patent literature, unless the applicant can justify with reasonable certainty that no references more pertinent than those already identified are likely to be found in the eliminated sources and includes such a justification with this statement;

5.2. be directed to the claimed invention and encompass all of the features of the claims, giving the claims the broadest reasonable interpretation;

5.3. encompass the disclosed features that may be claimed.

6. must provide in support of the petition an accelerated examination support document. An accelerated examination support document must include:

6.1. an information disclosure statement (IDS) in compliance with 37 CFR 1.98 citing each reference deemed most closely related to the subject matter of each of the claims;

6.2. an identification of all the limitations in the claims that are disclosed by the reference specifying where the limitation is disclosed in the cited reference;

6.3. a detailed explanation of how each of the claims are patentable over the references cited with particularity required by 37 CFR 1.111(b) and (c);

6.4. a concise statement of the utility of the invention as defined in each of the independent claims (unless the application is a design application);

6.5. a showing of where each limitation of the claims finds support under 35 U.S.C. 112, first paragraph, in the written description of the specification. If applicable, the showing must also identify: (1) each means- (or step) plus-function claim element that invokes consideration under 35 U.S.C. 112, sixth paragraph; and (2) the structure, material, or acts in the specification that corresponds to each means- (or step) plus-function claim element that invokes consideration under 35 U.S.C. 112, sixth paragraph; if the application claims the benefit of one or more applications under title 35, United States Code, the showing must also include where each limitation of the claims finds support under 35 U.S.C. 112, first paragraph, in each such application in which such supports exists;

6.6. an identification of any cited references that may be disqualified under 35 U.S.C. 103(c).

REVIEW OF FACTS

The conditions I:1-4, II: 1-5, 5.3, 6, 6.1, 6.4, and 6.6 above are considered to have been met. However, the petition fails to comply with conditions II : 5.1, 5.2, 6.2, 6.3, 6.4 and 6.5 above.

Therefore, the petition fails to meet the required conditions to be accorded special status under the accelerated examination procedure.

Discussion

When referring to "the petition" hereinbelow, the received papers under consideration include the PTO/SB/28 form, the "pre-examination search document" including pages 1-13; the "accelerated examination support document" comprising pages 1-31, and an Information Disclosure Statement including form PTO/SB/08A.

Regarding the requirements of section II element 5.1 and 5.2 outlined above, it appears the search outlined in the petition omitted a critical search area by not searching in class 229 subclasses 4.5, 5.5, 5.84, 198.2 and class 428 subclasses 34.2. It is noted that it appears that there is a typo in the pre-examination search in that the subclasses in 229 were searched but are indicated as a class 220 search. If so, clarification should be made.

Regarding the requirements of section II element 6.2 outlined above, the petition fails to identify all of the limitations in the application claims that are disclosed in each of the reference(s) and where the limitation is disclosed in each of the cited reference. As stated in the policy published in the Federal Register on June 26, 2006 (71 Fed. Reg. 36323), for each reference cited, the examination support document must include an identification of all the limitations in the claims that are disclosed by the reference specifying where the limitation is disclosed in the cited reference. The policy statement does not caveat "the independent claims", nor does it allow for grouping and general discussions. A grantable petition must delineate every limitation of every claim and identify where the equivalent limitation is disclosed in each piece of prior art cited on the IDS. As is published on www.uspto.gov/web/patents/accelerated/ in "Guidelines for Applicants under the new accelerated examination procedures"):

> *For each reference cited, the accelerated examination support document must include an identification of all the limitations in the claims that are disclosed by the reference specifying where the limitation is disclosed in the cited reference. Applicants should specify where in each of the cited references the particular claim limitations are found. This process is intended to be analogous to the analysis an examiner uses when locating a relevant prior art reference and then determining whether the reference contains the claimed limitation. For each claimed limitation, the examiner would consider the disclosure of the reference and all reasonable portions in the reference where the limitation is shown. When preparing an Office Action, the examiner would correlate the limitation to the portion of reference which best characterizes the limitation. This part of the AESD is not intended to be an exhaustive listing of every conceivable subjective interpretation of how a claim limitation may read on the reference. Applicants should point out what are considered to be the relevant representations of the limitation in the reference. A limitation may be found in more than one portion of the reference and should be pointed out, yet the intention is not to have applicants point out every conceivable interpretation. The USPTO will adopt a rule of reason when evaluating this portion of the AESD. Unless the representation is so deficient that it would materially effect examination of the application (e.g., numerous instances where the limitations are*

not shown where applicant states they are), the representation will be deemed to be sufficient for this part of the AESD.

In the instant petition, petitioner does not address each limitation and where it is (or state that it is not) found in each closest prior art. By not addressing all limitations, it is not clear whether a limitation was overlooked in the discussion of the reference or not found in the reference. Additionally, there is no direct correlation between the limitations of the claims and where each limitation is found in the references. The general discussion of each reference does not specifically provide this correlation.

Similarly, with respect to the requirements of section II element 6.3 outlined above, the petition fails to provide a detailed explanation of how each of the claims are patentable over (each of) the reference(s) with particularity required by 37 CFR 1.111(b) and (c). Petitioners should be specific in their explanation and include the identification of specific claim limitations that support their position, where appropriate. Petitioners must distinguish each claim from each piece of prior art cited. General statements that the claims are neither anticipated nor rendered obvious by the cited references or that the references are not properly combinable will not be acceptable. The Office cannot infer or guess what petitioner believes the differences between the claims and the teachings of the prior art to be. Petitioner's statements must also be consistent and must be related to the claim language. In the instant petition, the specific claim limitations that provide patentability have not been provide.
A statement that the dependent claims are allowable because the independent claims are patentable is not sufficient. This does not provide guidance to the examiner as to whether the limitations could provide patentability should the examiner find the independent claims unpatentable.

Regarding the requirements of section II element 6.5 outlined above, the requirements of this section are not met. A grantable petition requires petitioner to provide a showing of where each limitation of the claims finds support under 35 U.S.C. 112, first paragraph, in the written description of the specification. If applicable, the showing must also identify: (1) each means- (or step) plus-function claim element that invokes consideration under 35 U.S.C. 112, sixth paragraph; and (2) the structure, material, or acts in the specification that corresponds to each means- (or step) plus-function claim element that invokes consideration under 35 U.S.C. 112, sixth paragraph; if the application claims the benefit of one or more applications under title 35, United States Code, the showing must also include where each limitation of the claims finds support under 35 U.S.C. 112, first paragraph, in each such application in which such supports exists. In the instant petition, petitioner has not addressed whether there are any means plus function elements. If there are none a statement to such must be provided..

DECISION

For the above-stated reasons, the petition is **dismissed**. The application will therefore be taken up by the examiner for action in its regular turn.

Petitioner is given a single opportunity to perfect the petition. Any request for reconsideration of this decision must be submitted within 1 (one) month or 30 (thirty) days, whichever is longer, (no extension of time under 37 CFR 1.136(a)) from the date of this decision in order to be considered timely. Any request for reconsideration must address all of the deficiencies indicated above.

Petitioner is reminded that, upon granting of the special status of the application on request for reconsideration, the application will be processed expeditiously. However, due to the dismissal of the instant petition, examination may not be completed within twelve months of the filing date of the application.

Any inquiry regarding this decision should be directed to Linda J. Sholl, TC 3700 Special Programs Examiner, at (571) 272-4391.

/Linda J. Sholl/
Linda J. Sholl
Special Programs Examiner
Technology Center 3700

UNITED STATES PATENT AND TRADEMARK OFFICE

Commissioner for Patents
United States Patent and Trademark Office
P.O. Box 1450
Alexandria, VA 22313-1450
www.uspto.gov

NOV 0 1 2011

MEADWESTVACO CORPORATION
ATTN: IP LAW GROUP - PATENTS
501 South 5th Street, 3rd Floor
Richmond VA 23219-0501

In re Application of: Zhiquan Yan Application No.: 13/183106 Filed: July 14, 2011 Title: HERMETICALLY SEALED PAPERBOARD CONTAINER WITH ENHANCED BARRIER PERFORMANCE	DECISION ON PETITION TO MAKE SPECIAL FOR NEW APPLICATION UNDER 37 C.F.R. § 1.102 & M.P.E.P. § 708.02

This is a decision on the renewed petition filed on October 28, 2011 to make the above-identified application special for accelerated examination procedure under 37 C.F.R. § 1.102(d).

The petition to make the application special is GRANTED.

The application is eligible for accelerated examination and the petition complies with the conditions for granting the application special status pursuant to the "Change to Practice for Petitions in Patent Applications to Make Special and for Accelerated Examination" published June 26, 2006, in the Federal Register. (71 Fed. Reg. 36323).

The prosecution of the instant application will be conducted expeditiously according to the following guidelines.

1. The application will be docketed to an examiner and taken up for action within two weeks of the date of this decision.

2. Restriction Practice:
   If the examiner determines that the claims are not directed to a single invention, a telephone request to elect one single invention will be made pursuant to MPEP 812.01. As a prerequisite to the grant of this petition, the applicant has agreed to make an oral election, by telephone, without traverse. If the applicant refuses to make an election without traverse, or the examiner cannot reach the applicant after a reasonable effort, the examiner will treat the first claimed invention (invention defined by claim 1) as having being constructively elected without traverse for examination.

3. Office action:
   If it is determined that, after appropriate consultation, there is a potential rejection or any other issue to be addressed, the examiner will telephone the applicant and arrange an interview to discuss and resolve the issue. An Office action, other than a Notice of Allowance and Fee(s) Due (Notice of Allowance), will not be issued unless either: 1) an interview was conducted but did not result in agreed to action that places the application in condition for allowance, or, 2) a determination is made that an interview would be unlikely to result in the application being placed in condition for allowance, and 3) an internal conference has been held to review any rejection of any claim.

4. Time for Reply:
   An Office action other than a Notice of Allowance or a final Office action will set a shortened statutory period of one month or thirty days, whichever is longer, for reply with no extension of time available under 37 CFR 1.136(a). Failure to timely file a reply within this non-extendible period for reply will result in the abandonment of the application.

5. Reply by Applicant:
   A timely reply to an Office action other than the Notice of Allowance must be submitted electronically via EFS or EFS-web and limited to addressing the rejections, objections and requirement made. Any amendment that attempts to: 1) add claims which would result in more than three pending independent claims or more than twenty pending total claims; 2) present claims not encompassed by the pre-examination search or an updated accelerated examination support document; or 3) present claims that are directed a non-elected invention or an invention other than that previously claimed and examined in the application, will be treated as not fully responsive and will not be entered.

   For any amendment to the claims (including any new claim) that is not encompassed by the accelerated examination support document, applicant must provide an updated accelerated examination support document that encompasses the amended or new claims at the time of filing of the amendment.

   To proceed expeditiously with the examination, it is recommended that a reply with amendments made to any claim or with any new claim being added be accompanied by an updated accelerated examination support document or a statement explaining how the amended or new claim is supported by the original accelerated examination support document.

6. Information Disclosure Statement (IDS):
   Any IDS filed during prosecution must be submitted electronically via EFS or EFS-web, accompanied by an updated accelerated examination support document, and be in compliance with 37 CFR 1.97 and 1.98.

7. Post-Allowance Processing:
   To expedite processing of the allowed application into a patent, the applicant must: 1) pay the required fees within one month of the date of the Notice of Allowance, and 2) not file any post allowance papers not required by the Office. In no event may the issue fee be paid and accepted later than three months from the date of the Notice of Allowance.

8. After-Final and Appeal Procedures:
   To expedite prosecution, after receiving the final Office action, applicant must: 1) promptly file a notice of appeal, an appeal brief and appeal fees; and 2) not request a pre-appeal brief conference.

   Any amendment, affidavit or other evidence filed after final Office action must comply with applicable rules and the requirements outlined in numbered paragraphs 5 and 6 above.

   On appeal, the application will proceed according to normal appeal procedures. After appeal, the application will again be treated special.

9. Proceedings Outside the Normal Examination Process:
   If the application becomes involved in a proceeding that is outside the normal examination process (e.g., a secrecy order, national security review, interference proceeding, petitions under 37 CFR 1.181, 182 or 183), the application will be treated special before and after such proceeding.

10. Final Disposition:
    The twelve month goal of this accelerated examination procedure ends with a final disposition. The mailing of a final Office action, a Notice of Allowance, the filing of a Notice of Appeal, or the filing of a Request for Continued Examination (RCE) is the final disposition.

If, during prosecution, a paper is not filed electronically using EFS-web, a reply is filed but is not fully responsive, the application is involved in an appeal, or a proceeding outside normal examination process, the application will still be examined expeditiously, however, the final disposition may occur more than twelve months from the filing of the application.

Any inquiry regarding this decision should be directed to Linda Sholl at (571) 272-4391

/Linda Sholl/
Linda Sholl
Special Programs Examiner
Technology Center 3700

UNITED STATES PATENT AND TRADEMARK OFFICE

UNITED STATES DEPARTMENT OF COMMERCE
United States Patent and Trademark Office
Address: COMMISSIONER FOR PATENTS
P.O. Box 1450
Alexandria, Virginia 22313-1450
www.uspto.gov

APPLICATION NO.	FILING DATE	FIRST NAMED INVENTOR	ATTORNEY DOCKET NO.	CONFIRMATION NO.
13/183,236	07/14/2011	Moon-Soo Kim	YKIM.P0009US	7899

32425 7590 09/27/2011

FULBRIGHT & JAWORSKI L.L.P.
98 SAN JACINTO BOULEVARD
SUITE 1100
AUSTIN, TX 78701-4255

EXAMINER	
ART UNIT	PAPER NUMBER
2875	

NOTIFICATION DATE	DELIVERY MODE
09/27/2011	ELECTRONIC

Please find below and/or attached an Office communication concerning this application or proceeding.

The time period for reply, if any, is set in the attached communication.

Notice of the Office communication was sent electronically on above-indicated "Notification Date" to the following e-mail address(es):

aopatent@fulbright.com

UNITED STATES PATENT AND TRADEMARK OFFICE

Commissioner for Patents
United States Patent and Trademark Office
P.O. Box 1450
Alexandria, VA 22313-1450
www.uspto.gov

SEP 27 2011

FULBRIGHT & JAWORSKI L.L.P.
98 SAN JACINTO BOULEVARD
SUITE 1100
AUSTIN TX 78701-4255

In re Application of
Moon-Soo KIM
Application No.: 13/183,236
Filed: 14 July 2011
Attorney Docket No.: YKIM.P0009US
For: LED LIGHT BOARD

: DECISION ON REQUEST TO
: PARTICIPATE IN THE PATENT
: PROSECUTION HIGHWAY
: PROGRAM AND PETITION
: TO MAKE SPECIAL UNDER
: 37 CFR 1.102(a)

This is a decision on the request to participate in the Patent Prosecution Highway (PPH) program and the petition under 37 CFR 1.102(a), filed 20 July 2011, to make the above-identified application special.

The request and petition are **DISMISSED**.

Discussion

A grantable request to participate in the PPH program and petition to make special require:

1. The U.S. application is

   a. a Paris Convention application which either
      i. validly claims priority under 35 U.S.C. 119(a) and 37 CFR 1.55 to one or more applications filed in the KIPO, or
      ii. validly claims priority under 35 U.S.C. 119(a)/365(a) to a PCT application that contains no priority claims,

   or

   b. a national stage application under the PCT (an application which entered the national stage in the U.S. from a PCT international application after compliance with 35 U.S.C. 371), which PCT application
      i. validly claims priority under 35 U.S.C. 365(b) to an application filed in the KIPO, or
      ii. validly claims priority under 35 U.S.C. 365(b) to a PCT application that contains no priority claims, or
      iii. contains no priority claim,

   or

   c. a so-called bypass application filed under 35 U.S.C. 111(a) which validly claims benefit under 35 U.S.C. 120 to a PCT application, which PCT application
      i. validly claims priority under 35 U.S.C. 365(b) to an application filed in the KIPO, or

ii. validly claims priority under 35 U.S.C. 365(b) to a PCT application that contains no priority claims, or
iii. contains no priority claim;

2. Applicant must submit a copy of:
    a. The allowable/patentable claim(s) from the KR application(s);
    b. An English translation of the allowable/patentable claim(s), and
    c. A statement that the English translation is accurate (if the claims were published in a language other than English);
3. Applicant must:
    a. Ensure that all the claims in the U.S. application must sufficiently correspond or be amended to sufficiently correspond to the allowable/patentable claim(s) in the KR application(s), and
    b. Submit a claims correspondence table in English;
4. Examination of the U.S. application has not begun;
5. Applicant must submit:
    a. A copy of all the office actions (which are relevant to patentability), excluding "Decision to Grant a Patent" from each of the KR application(s) containing the allowable/patentable claim(s);
    b. An English language translation of the KIPO office action; and
    c. A statement that the English translation is accurate (if the office actions are not in the English language);
6. Applicant must submit:
    a. An IDS listing the documents cited by the KIPO examiner in the KIPO office action (unless already filed in this application); and
    b. Copies of all the documents cited in the KIPO office action, except U.S. patents or U.S. patent application publications (unless already filed in this application);

This request to participate in the PPH program and petition is assessed as follows:

Requirements (1, 4, 6) above are considered to have been met. However the request to participate in the PPH program fails to meet requirements (2), (3) and (5).

Regarding the requirements of condition (2), Applicant has failed to submit a copy of the allowable/patentable claims from the KIPO application. Applicant has submitted claim 1-4 from the country's application, however, it is unclear if these claims have been indicated as allowable/patentable because only a copy of the KIPO rejection has been presented. Further, Applicant's claims correspondence table lists KIPO claims 1, 4-6 but claims 1-4 are presented in Korean and English, not claims 1, 4-6. A statement that the English translation is accurate is present.

Regarding the requirements of condition (3), a claims correspondence table in English is present which lists KIPO claims 1, 4-6 corresponding to claims 1-4 in the US application. Translated claims 1-4 appear to be a copy of the claims 1-4 in the US application, however, these claims do not correspond to allowable/patentable claims in the country's application since no claims are indicated as allowable/patentable and it does not appear that claims 1, 4-6 are presented as translated from the Korean claims 1, 4-6.

Regarding the requirements of condition (5), a statement that the English translation is accurate is present. However, there is no copy of all of the office actions from each of the KR application(s) containing the allowable/patentable claim(s); a copy of the Korean office action and an English language translation of the office action are present but these appear to be rejection office actions.

Applicant is given **ONE** opportunity within a time period of **ONE MONTH or THIRTY DAYS**, whichever is longer, from the mailing date of this decision to correct the deficiencies. **NO EXTENSION OF TIME UNDER 37 CFR 1.136 IS PERMITTED.** If the deficiencies are not corrected with the time period given, the application will await action in its regular turn.

Response must be filed via the Electronic Filing System (EFS) using the document description: Petition to make special under Patent Pros Hwy. Any preliminary amendments and IDS submitted with the PPH documents must be separately indexed as a preliminary amendment and IDS, respectively.

Telephone inquiries concerning this decision should be directed to Colleen Dunn at 571-272-1170.

All other inquiries concerning the examination or status of the application is accessible in the PAIR system at http://www.uspto.gov/ebc/index.html.

/Colleen Dunn/

Colleen Dunn
Quality Assurance Specialist
Technology Center 2800

PATENT

IN THE UNITED STATES PATENT AND TRADEMARK OFFICE

In re Application of:
Moon-Soo KIM

Serial No.: 13/183,236

Filed: July 14, 2011

For: LED LIGHT BOARD

Group Art Unit: 2875

Examiner: Not yet assigned

Atty. Dkt. No.: YKIM.P0009US

Confirmation No.: 7899

CERTIFICATE OF ELECTRONIC TRANSMISSION
37 C.F.R. § 1.8

I hereby certify that this correspondence is being electronically filed with the United States Patent and Trademark Office via EFS-Web on the date below:

October 11, 2011 — Tamsen L. Barrett
Date

REQUEST FOR RECONSIDERATION OF PETITION

Attention: Office of Petitions
Mail Stop Petition
Commissioner for Patents
P.O. Box 1450
Alexandria, Virginia 22313-1450

Commissioner:

Applicant submits this paper in response to decision on the request to participate in the Patent Prosecution Highway (PPH) program and the petition under 37 CFR 1.102(a) filed September 27, 2011, for which the one month date to respond is October 27, 2011.

Should any additional fees be required for any reason relating to the filing of this document, please consider this paragraph as authorization to withdraw the appropriate fee under 37 C.F.R. §§ 1.16 to 1.21 from Fulbright & Jaworski L.L.P. Deposit Account No.: 50-1212/YKIM.P0009US/11106877.

Applicant respectfully requests reconsideration of the present petitions in view of the following remarks.

A. RESPONSE

The request to participate in the Patent Prosecution Highway (PPH) program and petition to make the above-identified application special were dismissed for an alleged failure to submit a copy of the allowable/patentable claims from the KIPO application. Applicant notes that a copy of the publication of the issued patent was submitted with the initial request and petition. However, in an attempt to present the documentation in a more clear and helpful manner, Applicant submits a copy of the rejection of the claims from the KIPO as Exhibit A (a copy of the English translation of this document was submitted and accepted with the original request) and a copy of the publication of the issued patent as Exhibit B. It is clear that Exhibit B is a copy of the publication of the issued patent for the following reasons: the face of the patent reflects the patent number (11), the grant date (24), and the date of publication of the granted patent (45). The face of the patent also reflects the kind code B1, which indicates that the publication is a patent specification. For at least the above reasons, Applicant clearly submitted the necessary copy of the patentable claims from the corresponding KIPO application with the original request.

In the original request, the Claims Correspondence Table in the petition form sufficiently indicated the manner in which the translated English claims corresponded to the issued Korean claims found in the publication of the issued patent. However, in order to ensure acceptance of the petition and to clarify the documentation, Applicant is submitting herewith a corrected "Translation of the Issued Claims" that reflects the numbering of the claims in the issued patent (Exhibit C). Also submitted is a certificate of accuracy of the translation of these translated claims (Exhibit D).

B. REQUEST FOR RELIEF

Applicant requests that this petition be granted. An officer of the U.S. Patent Office is invited to contact Applicant's representative at (512) 536-3123 with any questions.

Respectfully submitted,

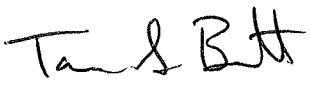

Tamsen L. Barrett
Reg. No. 57,318
Attorney for Applicant

FULBRIGHT & JAWORSKI L.L.P.
98 San Jacinto Boulevard, Suite 1100
Austin, Texas 78701
Telephone: (512) 474-5201
Facsimile: (512) 536-4598

Date: October 11, 2011

EXHIBIT A

발송번호: 9-5-2010-052757957
발송일자: 2010.11.22
제출기일: 2011.01.22

심사관	파트장	과장	국장	보고
김일한				

YOUR INVENTION PARTNER

특 허 청

의견제출통지서

출 원 인 명 칭 주식회사 필리스 (출원인코드: 120070275575)
주 소 경기도 광주시 태전동 449
대 리 인 명 칭 김영관
주 소 서울 서초구 반포동736-8 신태양빌딩 801호(명성국제특허법률사무소)
발 명 자 성 명 김문수
주 소 서울 동대문구 장안4동 119-15

출 원 번 호 10-2010-0101678
발 명 의 명 칭 ＬＥＤ 라이트보드

이 출원에 대한 심사결과 다음과 같은 거절이유가 있어 특허법 제63조에 따라 이를 통지하오니 의견이 있거나 보정이 필요할 경우에는 상기 제출기일까지 의견(답변, 소명)서[특허법 시행규칙 별지 제24호서식] 또는/및 보정서[특허법시행규칙 별지 제9호서식]를 제출하여 주시기 바랍니다. 상기 제출기일에 대하여 1월 단위로 4개월까지 지정기간연장신청을 할 수 있으며, 필요한 경우 4개월 범위 내에서 2개월 이상을 일괄하여 연장신청할 수 있습니다. 불가피한 사유의 발생(하단의 안내참조)으로 4개월을 초과하여 지정기간을 연장받고자 하는 때에는 그 사유를 기재한 소명서를 추가로 첨부하여 지정기간연장신청서를 제출하여야 합니다.

[심사결과]

☐ 심사 대상 청구항 : 제1-6항

☐ 이 출원의 거절이유가 있는 부분과 관련 법조항

순번	거절이유가 있는 부분	관련 법조항
1	청구항 제5항 내지 제6항	특허법 제42조제4항제2호
2	청구항 전항	특허법 제29조제2항

[구체적인 거절이유]

1. 이 출원은 특허청구범위의 청구항 제5항 내지 제6항의 기재가 아래에 지적한 바와 같이 불비하여 특허법 제42조제4항제2호에 따른 요건을 충족하지 못하므로 특허를 받을 수 없습니다.

- 아 래 -

가. 제5항에 '상기 단부마감부(54)' 라고 기재하고 있으나, 여기서 '상기' 가 무엇을 지칭하는지 명확하게 기재되어 있지 않습니다. 또한, 이하 청구항인 제6항은 위 기재한 거절이유를 포함하고 있습니다.

2. 이 출원의 특허청구범위의 청구항 전항에 기재된 발명은 아래와 같이 그 출원 전에 이 발명이 속하는 기술 분야에서 통상의 지식을 가진 자가 용이하게 발명할 수 있는 것이므로 특허법 제29조제2항에 따라 특허를 받을 수 없습니다.

- 아 래 -

가. 본원은 LED 라이트보드에 관한 것으로, '프레임의 단부에 모서리마감단' 을 구성한 것을 특징으로 합니다.

국내 등록특허공보 제0947657호(공고일 2010.03.12, 이하 인용발명 1이라 함.)
국내 등록특허공보 제0700730호(공개일 2007.03.27, 이하 인용발명 2라 함.)
국내 공개실용신안공보 제2010-7684호(공개일 2010.07.29, 이하 인용발명 3이라 함.)

첨부된 인용발명 1의 4각 엘이디 조명등 역시, LED광원을 이용하고 백라이트 보드의 모서리를 마감하는 구성이 기재되어 있습니다.
다만, 본원은 모서리마감단으로 구성된 것에 차이가 있으나, 이는 인용발명 2의 도광판과 광원모듈을 프레임에 장착하는 구성과 인용발명 3의 프레임의 격벽에 안착되어 있는 발광부의 전선들이 상부 수용공간에서 하부 수용공간으로 관통하는 전선 유출부의 구조를 인용하여 단순 설계 변경하거나 단순 선택을 통해 용이하게 발명할 수 있습니다.(이상 제1항 관련)

나. 제2항 내지 제6항은 모서리마감단에 틈새 공간마감부를 형성하여 LED모듈과 전선이 연결되는 전선홈과 끼움공을 형성한 것을 특징으로 하고 있으나, 이는 인용발명 1의 4각 형태를 가지며 내부에 개구(111)가 형성되는 프레임 조립체와, 서로 대향되는 2개의 사이드 프레임의 측면에 배치된 광원(130), 프레임 조립체의 개구에 순차적으로 적층된 확산판(140), 도광판(150), 반사판(160), 쿠션 플레이트(170), 프레임 조립체의 각각의 모서리의 전면 부분을 덮을 수 있도록 코너 브라켓(120)에 설치되는 4개의 코너 프레임(190)을 구비한 4각 엘이디 조명등과 인용발명 2의 램프하우징(150)의 적당한 위치에는 외부에서 전원부 모듈(119)에 필요한 전력을 공급하기 위한 전극단자 및 인용발명 3의 유출공(120)을 통해 프레임(10)의 격벽(100)에 안착되어 있는 발광부(30)의 전선(310)들이 상부 수용공간에서 하부 수용공간으로 관통하여 이동할 수 있으며, 인접하는 타 엘이디 조명 기구가 결합되었을 때, 전선(310)들이 외부로 노출되지 않는 구조로 구성된 결합형 엘이디 조명 기구와 같이 일반적인 LED 라이트보드를 프레임에 장착하기 위한 주지의 구성입니다.

따라서 당업자라면, 전항에 기재된 발명은, 인용발명 1~3의 결합에 의하여 용이하게 발명할 수 있습니다.

[첨 부]
첨부1 등록특허번호 제0947657호(2010.03.12.) 1부.
첨부2 등록특허번호 제0700730호(2007.03.27.) 1부.
첨부3 공개실용 제2010-7684호(2010.07.29.) 1부. 끝.

2010.11.22

특허청 정보통신심사국

영상기기심사과 심사관 김일환

<< 안내 >>

특허법 제47조제2항에 따라 특허출원서에 최초로 첨부된 명세서 또는 도면에 기재된 사항의 범위 안에서 명세서 또는 도면을 보정할 수 있음을 알려드립니다.

(참고 : 최후거절이유통지 후 및 특허거절결정에 대한 재심사 청구시의 보정에 대해서는 특허법 제47조제3항 규정도 적용됨을 알려드립니다.)

※ 보정료 납부안내

- 명세서 또는 도면을 보정하기 위하여 명세서등 보정서를 전자문서로 제출할 경우 매건 4,000원, 서면으로 제출할 경우 매건 14,000원의 보정료를 납부하여야 합니다.

- 보정료는 접수번호를 부여받아 이를 납부자번호로 "특허료등의 징수규칙" 별지 제1호서식에 기재하여, 접수번호를 부여받은 날의 다음 날까지 납부하여야 합니다. 다만, 납부일이 공휴일(토요휴무일을 포함한다)에 해당하는 경우에는 그날 이후의 첫 번째 근무일까지 납부하여야 합니다.

- 보정료는 국고수납은행(대부분의 시중은행)에 납부하거나, 인터넷지로(www.giro.or.kr)로 납부할 수 있습니다. 다만, 보정서를 우편으로 제출하는 경우에는 보정료에 상응하는 통상환을 동봉하여 제출하시면 특허청에서 납부해드립니다.

※ 지정기간연장 안내

연장가능기간(4개월)을 초과하여 지정기간을 연장하고자 소명서를 첨부하여 지정기간연장신청서를 제출한 경우 심사관은 아래의 사유에 해당되는지를 판단하여 지정기간연장의 승인 여부 및 연장할 수 있는 기간을 정하여 통지합니다.

【초과 연장 승인 사유】

① 기간만료 전 1개월 이내에 최초로 대리인을 선임하거나 선임된 대리인 모두를 해임·변경한 경우

② 기간만료 전 1개월 이내에 출원인변경신고서를 제출한 경우

③ 기간만료 전 2개월 이내에 외국특허청의 심사결과를 받은 경우로서 동 심사결과를 보정서에 반영하고자 하는 경우(이 경우 신청서 제출 시 해당 심사결과 사본 및 그 기초가 된 청구범위 사본도 같이 제출해야 함)

④ 의견제출통지서의 송달이 1개월 이상 지연된 경우(1개월 추가 연장 가능)

⑤ 원출원 또는 분할출원이 심판이나 소송에 계류 중인 경우

⑥ 거절이유와 관련된 시험 및 결과측정에 기간이 더 필요한 경우

⑦ 기타 불가피하게 기간연장이 필요하다고 인정되는 경우

단, 제3자가 심사청구한 때에는 ①~⑤의 경우라도 불승인

※ 더 자세한 사항은 ☎ 042-481-5780(담당심사관 김일환)로 문의하시기 바랍니다. 서식 또는 절차에 대하여는 특허고객 상담센터(☎1544-8080)를 이용하여 주십시오.

※ 우 302-701 대전광역시 서구 선사로 139, 정부대전청사 특허청

EXHIBIT B

(19) 대한민국특허청(KR)
(12) 등록특허공보(B1)

(45) 공고일자 2011년03월07일
(11) 등록번호 10-1019072
(24) 등록일자 2011년02월24일

(51) Int. Cl.
G09F 13/18 (2006.01) *G09F 13/22* (2006.01)
(21) 출원번호 10-2010-0101678
(22) 출원일자 2010년10월19일
심사청구일자 2010년10월19일
(56) 선행기술조사문헌
KR100947657 B1*
KR100700730 B1*
KR2020100007684 U*
*는 심사관에 의하여 인용된 문헌

(73) 특허권자
주식회사 필리스
경기도 광주시 태전동 449
(72) 발명자
김문수
서울 동대문구 장안4동 119-15
(74) 대리인
김영관

전체 청구항 수 : 총 4 항 심사관 : 김일환

(54) L E D 라이트보드

(57) 요 약

본 발명은 LED 라이트보드에 관한 것으로서, 빛의 경로 및 산란을 유도하기 위한 사각형 형태의 도광판(10)과, 도광판(10)의 측부에 설치되어 빛을 조사하는 다수의 LED(21)로 구성된 LED모듈(20)과, LED모듈(20)이 내장된 상태에서 도광판(10)의 가장자리와 결합되는 제1프레임(30)과, 제1프레임(30)의 양단에서 직각 방향에서 도광판(10)의 가장자리와 결합되는 제2프레임(40)을 포함한다. 제1프레임(30)은, 상기 도광판(10)의 가장자리 측부에 위치되는 제1측벽(31)과, 상기 제1측벽(31)의 일단에서 절곡된 형상으로 형성된 제1상부날개(32)와, 상기 제1측벽(31)의 타단에서 절곡된 형상으로 형성되되 그 제1상부날개(32)보다 큰 폭을 가져서 상기 도광판(10)의 가장자리 타단면에 부착되는 제1하부날개(33)로 구성되고; 제2프레임(40)은, 도광판(10)의 측부에 위치되는 제2측벽(41)과, 제2측벽(41)의 일단에서 절곡된 형상으로 형성된 제2상부날개(42)와, 제2측벽(41)의 타단에서 절곡된 형상으로 형성되되 그 제2상부날개(42)보다 큰 폭을 가져서 도광판(10)의 가장자리 타단면에 부착되는 제2하부날개(43)로 구성되며; 제1프레임(30)과 제2프레임(40)의 단부는 모서리마감단(50)로 연결되어 마감되는 것;을 특징으로 한다.

대 표 도 - 도1

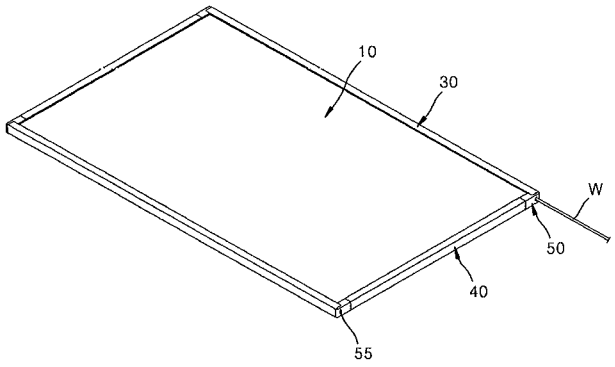

특허청구의 범위

청구항 1

빛의 경로 및 산란을 유도하기 위한 사각형 형태의 도광판(10)과, 상기 도광판(10)의 측부에 설치되어 빛을 조사하는 다수의 LED(21)로 구성된 LED모듈(20)과, 상기 LED모듈(20)이 내장된 상태에서 상기 도광판(10)의 가장자리와 결합되는 제1프레임(30)과, 상기 제1프레임(30)의 양단에서 직각 방향에서 상기 도광판(10)의 가장자리와 결합되는 제2프레임(40)을 포함하는 LED 라이트보드에 있어서,

상기 제1프레임(30)은, 상기 도광판(10)의 가장자리 일측부에 위치되는 제1측벽(31)과, 상기 제1측벽(31)의 일단에서 절곡된 형상으로 형성된 제1상부날개(32)와, 상기 제1측벽(31)의 타단에서 절곡된 형상으로 형성되되 그 제1상부날개(32)보다 큰 폭을 가져서 상기 도광판(10)의 가장자리 일단면에 부착되는 제1하부날개(33)로 구성되고;

상기 제2프레임(40)은, 상기 도광판(10)의 가장자리 타측부에 위치되는 제2측벽(41)과, 상기 제2측벽(41)의 일단에서 절곡된 형상으로 형성된 제2상부날개(42)와, 상기 제2측벽(41)의 타단에서 절곡된 형상으로 형성되되 그 제2상부날개(42)보다 큰 폭을 가져서 상기 도광판(10)의 가장자리 타단면에 부착되는 제2하부날개(43)로 구성되며;

상기 제1프레임(30)과 제2프레임(40) 각각의 양 단부가 직각되게 절단되고;

상기 제1,2프레임(30)(40)을 사각틀형태로 조립하기 위하여, 한쌍의 상기 제1프레임(30)의 제1하부날개(33) 측부에 한쌍의 상기 제2하부날개(43)의 단부가 밀착되게 배치할 경우, 상기 제1상부날개(32)와 제2상부날개(42) 사이에 틈새공간(S)이 형성되며;

상기 모서리마감단(50)은, 상기 제1프레임(30)의 제1측벽(31)과 제1상,하부날개(32)(33) 사이에 끼어지는 제1끼움단(51)과, 상기 제2프레임(40)의 제2측벽(41)과 제2상,하부날개(42)(43) 사이에 끼어지는 제2끼움단(52)과, 상기 제1,2끼움단(51)(52)이 상기 제1,2프레임(30)(40)에 각각 끼어질 때 상기 제1상부날개(32)와 제2상부날개(42) 사이의 상기 틈새공간(S)을 폐쇄함과 동시에 그 제1,2상부날개(32)(42)의 표면과 동일면을 이루는 틈새공간마감부(53)를 포함하는 것을 특징으로 하는 LED 라이트보드.

청구항 2

삭제

청구항 3

삭제

청구항 4

제1항에 있어서, 상기 모서리마감단(50)은,

상기 제1끼움단(51)의 단부에서 상기 제1측벽(31) 및 제1상,하부날개(32)(33)의 두께만큼 돌출되어, 상기 제1끼움단(51)이 상기 제1프레임(30)에 끼어질 때 상기 제1측벽(31) 및 제1상,하부날개(32)(33)의 단부가 보이지 않도록 하는 마감하는 단부마감부(54)를 더 포함하는 것을 특징으로 하는 LED 라이트보드.

청구항 5

제4항에 있어서, 상기 모서리마감단(50)은,

그 내부에 형성되어 상기 LED모듈(20)과 연결되는 전선이 관통되는 전선홈(55a)과, 상기 단부마감부(54)에 형성되어 상기 전선홈(55a)과 연통되는 제1전선끼움공(55)을 더 포함하는 것을 특징으로 하는 LED 라이트보드.

청구항 6

제5항에 있어서, 상기 모서리마감단(50)은,

상기 틈새공간마감부(53)에 형성된 것으로서, 상기 전선홈(55a)과 연통되는 제2전선끼움공(56)을 더 포함하는

것을 특징으로 하는 LED 라이트보드.

명 세 서

기 술 분 야

[0001] 본 발명은 LED 라이트보드에 관한 것으로서, 더욱 상세하게는 모서리 부분이 마감되어 제작 및 시공과정에서 상처를 입는 것을 방지할 수 있는 LED 라이트보드에 관한 것이다.

배 경 기 술

[0002] 최근에는 새로운 조명발생장치로 LED를 광원으로 하는 LED 라이트보드가 개발되어 사용되고 있다. LED 라이트보드는, 확산판이 밀착된 도광판과, 그 도광판의 측부에 밀착되게 배치되는 것으로서 다수의 LED를 가지는 LED 모듈과, LED 모듈을 도광판에 밀착된 상태로 고정하기 위한 프레임으로 구성된다. 이때 프레임은, 모서리 부분이 45㎭각도로 절단된 프레임 조각이 그 절단된 부분이 상호 밀착됨으로서 구현된다.

[0003] 그런데, LED 라이트보드에 있어서, 프레임의 모서리 부분은 매우 날카롭기 때문에 제작과정이나 시공과정에서 상처가 날 가능성이 매우 크고, 또한 모서리 부분이 깔끔하게 마감되지 않게 되어 미관상 좋지 않았다라는 문제점이 있었다.

발명의 내용

해결하려는 과제

[0004] 본 발명은 상기와 같은 문제점을 해결하기 위하여 안출된 것으로서, LED 라이트보드를 구성하는 프레임의 모서리 부분을 부드럽게 마감함으로써, 제작 및 시공과정에서 상처를 입는 것을 방지할 수 있고, 상품의 가치를 높일 수 있는 LED 라이트보드를 제공하는 것을 목적으로 한다.

[0005] 본 발명의 다른 목적은, 모서리마감단을 이용하여 제1프레임과 제2프레임을 용이하게 조립할 수 있고, 이에 따라 생산성을 높일 수 있는 LED 라이트보드를 제공하는 것이다.

과제의 해결 수단

[0006] 상기와 같은 목적을 달성하기 위하여, 본 발명에 따른 LED 라이트보드는,

빛의 경로 및 산란을 유도하기 위한 사각형 형태의 도광판(10)과, 상기 도광판(10)의 측부에 설치되어 빛을 조사하는 다수의 LED(21)로 구성된 LED모듈(20)과, 상기 LED모듈(20)이 내장된 상태에서 상기 도광판(10)의 가장자리와 결합되는 제1프레임(30)과, 상기 제1프레임(30)의 양단에서 직각 방향에서 상기 도광판(10)의 가장자리와 결합되는 제2프레임(40)을 포함하는 LED 라이트보드에 있어서,

상기 제1프레임(30)은, 상기 도광판(10)의 가장자리 일측부에 위치되는 제1측벽(31)과, 상기 제1측벽(31)의 일단에서 절곡된 형상으로 형성된 제1상부날개(32)와, 상기 제1측벽(31)의 타단에서 절곡된 형상으로 형성되되 그 제1상부날개(32)보다 큰 폭을 가져서 상기 도광판(10)의 가장자리 일단면에 부착되는 제1하부날개(33)로 구성되고; 상기 제2프레임(40)은, 상기 도광판(10)의 가장자리 타측부에 위치되는 제2측벽(41)과, 상기 제2측벽(41)의 일단에서 절곡된 형상으로 형성된 제2상부날개(42)와, 상기 제2측벽(41)의 타단에서 절곡된 형상으로 형성되되 그 제2상부날개(42)보다 큰 폭을 가져서 상기 도광판(10)의 가장자리 타단면에 부착되는 제2하부날개(43)로 구성되며; 상기 제1프레임(30)과 제2프레임(40) 각각의 양 단부가 직각되게 절단되고; 상기 제1,2프레임(30)(40)을 사각틀형태로 조립하기 위하여, 한쌍의 상기 제1프레임(30)의 제1하부날개(33) 측부에 한쌍의 상기 제2하부날개(43)의 단부가 밀착되게 배치할 경우, 상기 제1상부날개(32)와 제2상부날개(42) 사이에 틈새공간(S)이 형성되며; 상기 모서리마감단(50)은, 상기 제1프레임(30)의 제1측벽(31)과 제1상,하부날개(32)(33) 사이에 끼어지는 제1끼움단(51)과, 상기 제2프레임(40)의 제2측벽(41)과 제2상,하부날개(42)(43) 사이에 끼어지는 제2끼움단(52)과, 상기 제1,2끼움단(51)(52)이 상기 제1,2프레임(30)(40)에 각각 끼어질 때 상기 제1상부날개(32)와 제2상부날개(42) 사이의 상기 틈새공간(S)을 폐쇄함과 동시에 그 제1,2상부날개(32)(42)의 표면과 동일면을 이루는 틈새공간마감부(53)를 포함하는 것을 특징으로 한다.

[0007] 삭제

[0008] 본 발명에 있어서, 상기 모서리마감단(50)은, 상기 제1끼움단(51)의 단부에서 상기 제1측벽(31) 및 제1상,하부날개(32)(33)의 두께만큼 돌출되어, 상기 제1끼움단(51)이 상기 제1프레임(30)에 끼어질 때 상기 제1측벽(31) 및 제1상,하부날개(32)(33)의 단부가 보이지 않도록 하는 마감하는 단부마감부(54)를 더 포함한다.

[0009] 삭제

[0010] 삭제

[0011] 본 발명에 있어서, 상기 모서리마감단(50)은, 그 내부에 형성되어 상기 LED모듈(20)과 연결되는 전선이 관통되는 전선홈(55a)과, 상기 단부마감부(54)에 형성되어 상기 전선홈(55a)과 연통되는 제1전선끼움공(55)을 더 포함한다.

[0012] 본 발명에 있어서, 상기 모서리마감단(50)은, 상기 틈새공간마감부(53)에 형성된 것으로서, 상기 전선홈(55a)과 연통되는 제2전선끼움공(56)을 더 포함한다.

발명의 효과

[0013] 본원에 따르면, 제1프레임과 제2프레임이 결합되는 모서리 부분을 마감함으로써, 본원의 LED 라이트보드를 제작 및 시공하는 과정에서 작업자가 상처를 입는 것을 방지할 수 있다.

[0014] 또한 제1프레임과 제2프레임을 모서리마감단을 이용하여 조립할 수 있으므로 조립을 용이하게 할 수 있고, 이에 따라 생산성을 높일 수 있다.

[0015] 그리고, 여러개의 LED 라이트보드를 밀착 연결하여 사용할 경우, LED 모듈로 전원을 인가하는 전선을 LED 라이트보드의 배면측으로 빠져나오게 하여 연결함으로써, 그 전선이 전면측으로 노출되는 것을 방지할 수 있다.

도면의 간단한 설명

[0016] 도 1은 본 발명에 따른 LED 라이트보드의 사시도,

도 2는 도 1의 LED 라이트보드에 있어 제1프레임과 제2프레임을 연결하는 모서리마감단을 설명하기 위한 사시도,

도 3은 도 2의 제1프레임과 제2프레임과 모서리마감단을 발췌하여 확대도시한 사시도,

도 4는 도 1의 LED 라이트보드의 단면도,

도 5는 제1프레임과 제2프레임의 모서리 부분에 형성된 틈새공간을 설명하기 위한 정면도,

도 6은 도 5의 배면도,

도 7은 제1프레임과 제2프레임을 연결하는 모서리마감단의 사시도,

도 8a는 도 7의 모서리마감단의 정면도이고, 도 8b는 도 7의 모서리마감담의 배면도이며, 도 8c는 도 7의 모서리마감단의 평면도이고, 도 8d는 도 7의 모서리마감단의 저면도.

발명을 실시하기 위한 구체적인 내용

[0017] 이하, 본 발명에 따른 LED 라이트보드를 첨부된 도면을 참조하여 상세히 설명한다.

[0018] 도 1은 본 발명에 따른 LED 라이트보드의 사시도이고, 도 2는 도 1의 LED 라이트보드에 있어 제1프레임과 제2프레임을 연결하는 모서리마감단을 설명하기 위한 사시도이며, 도 3은 도 2의 제1프레임과 제2프레임과 모서리마감단을 발췌하여 확대도시한 사시도이다. 또, 도 4는 도 1의 LED 라이트보드의 단면도이고, 도 5는 제1프레임과 제2프레임의 모서리 부분에 형성된 틈새공간을 설명하기 위한 정면도이며, 도 6은 도 5의 배면도이며, 도 7은 제1프레임과 제2프레임을 연결하는 모서리마감단의 사시도이다. 그리고, 도 8a는 도 7의 모서리마감단의 정면도

이고, 도 8b는 도 7의 모서리마감담의 배면도이며, 도 8c는 도 7의 모서리마감단의 평면도이고, 도 8d는 도 7의 모서리마감단의 저면도이다.

[0019] 도시된 바와 같이, 본 발명에 따른 LED 라이트보드는, 빛의 경로 및 산란을 유도하기 위한 사각형 형태의 도광판(10)과; 도광판(10)의 측부에 설치되어 빛을 조사하는 다수의 LED(21)로 구성된 LED모듈(20)과; LED모듈(20)이 내장된 상태에서 도광판(10)의 가장자리 일측부에 결합되는 제1프레임(30)과; 제1프레임(30)의 양단에 직각방향에서 도광판(10)의 가장자리 타측부에 결합되는 제2프레임(40)과; 제1프레임(30)과 제2프레임(40)을 상호 연결하여 모서리를 마감하는 모서리마감단(50);을 포함하는 것을 특징으로 한다.

[0020] 도광판(10)은, 투광 가능한 아크릴판으로 이루어지며, 일측면에 빛의 경로 및 산란을 유도하기 위한 패턴이 형성된다. 이러한 도광판(10)에는 확산판, 반사층이 적층된 구조를 가진다. 이러한 도광판(10)은, 후술할 사각틀 형태로 결합되는 제1,2프레임(30)(40)의 제1,2상부날개(32)(42)를 통과하여 제1,2하부날개(33)(43)에 양면접착테이프(T)에 의하여 부착된다.

[0021] LED 모듈(20)은 띠 형태의 PCB 기판(22)에 LED(21)가 일정 간격으로 배치되어 구현된다. 본 실시예에서 LED 모듈(20)은 한쌍의 제1프레임(30) 내측에 각각 설치된 것으로 설명하고 있으나, 한쌍의 제2프레임(40) 내측에도 각각 설치될 수 있음은 물론이다.

[0022] 제1프레임(30)은 방열이 가능하도록 금속성 재질, 바람직하게는 알루미늄으로 되어 있다. 이러한 제1프레임(30)은 도광판(10)의 가장자리 일측부에 위치되는 제1측벽(31)과, 제1측벽(31)의 일단에서 절곡된 형상으로 형성된 제1상부날개(32)와, 제1측벽(31)의 타단에서 절곡된 형상으로 형성되되 그 제1상부날개(32)보다 큰 폭을 가져서 도광판(10)의 가장자리 일단면에 부착되는 제1하부날개(33)로 구성되고, 양단부는 직각되게 절단된 형태로 되어 있다.

[0023] 제2프레임(40)은 방열이 가능하도록 금속성 재질, 바람직하게는 알루미늄으로 되어 있다. 이러한 제2프레임(40)은, 도광판(10)의 가장자리 타측부에 위치되는 제2측벽(41)과, 제2측벽(41)의 일단에서 절곡된 형상으로 형성된 제2상부날개(42)와, 제2측벽(41)의 타단에서 절곡된 형상으로 형성되되 그 제2상부날개(42)보다 큰 폭을 가져서 도광판(10)의 가장자리 타단면에 부착되는 제2하부날개(43)로 구성되고, 양 단부는 직각되게 절단된 형태이다.

[0024] 상기한 제1,2프레임(30)(40)의 구조에 의하여, 제1,2프레임(30)(40)이 사각틀형태로 결합될 경우, 도 4에 도시된 바와 같이, 도광판(10)은 제1,2상부날개(32)(42)를 통과한 후 가장자리가 양면접착테이프(T)에 의하여 제1,2하부날개(33)(43)에 부착된다.

[0025] 한편, 제1,2프레임(30)(40) 각각의 양단은 직각되게 절단된 형태이고, 각각은 제1,2상부날개(32)(42) 보다 큰 폭의 제1,2하부날개(33)(43)를 가진다. 따라서, 제1,2프레임(30)(40)을 사각틀형태로 조립하기 위하여, 한쌍의 제1하부날개(33) 측부에 한쌍의 제2하부날개(43)의 단부가 밀착되게 배치할 경우, 도 3 및 도 5에 도시된 바와 같이, 제1상부날개(32)와 제2상부날개(42) 사이에 틈새공간(S)이 형성된다. 이러한 틈새공간(S)은, 상기한 모서리마감단(50)이 제1,2프레임(30)(40)에 결합되면서 폐쇄하게 된다.

[0026] 이를 위하여, 모서리마감단(50)은, 도 7 및 도 8a 내지 도 8d에 도시된 바와 같이, 제1프레임(30)의 단부, 상세하게는 제1측벽(31)과 제1상,하부날개(32)(33) 사이에 끼어지는 제1끼움단(51)과; 제2프레임(40)의 단부, 상세하게는 제2측벽(41)과 제2상,하부날개(42)(43) 사이에 끼어지는 제2끼움단(52)과; 제1,2끼움단(51)(52)이 제1,2프레임(30)(40)에 각각 끼어질 때 제1상부날개(32)와 제2상부날개(42) 사이의 틈새공간(S)을 폐쇄함과 동시에 그 제1,2상부날개(32)(42)의 표면과 동일면을 이루는 틈새공간마감부(53);를 포함한다. 이때, 제1끼움단(51)과 제2끼움단(52)은 돌출된 형상으로 되어 있으나, 제1,2프레임(30)(40)의 규격에 따라 돌출되는 길이는 가변될 수 있다.

[0027] 또 모서리마감단(50)은, 제1끼움단(51)의 단부에서 제1측벽(31) 및 제1상,하부날개(32)(33)의 두께만큼 돌출되어, 제1끼움단(51)이 제1프레임(30)에 끼어질 때 제1측벽(31) 및 제1상,하부날개(32)(33)의 단부가 보이지 않도록 마감하는 단부마감부(54)가 형성된다.

[0028] 또한 모서리마감단(50)의 내부에는, LED모듈(20)과 연결되는 전선(w)이 관통되는 전선홈(55a)이 형성되어 있고, 단부마감부(54)에는 전선홈(55a)과 연통되는 제1전선끼움공(55)이 형성되어 있다. 제1전선끼움공(55)을 통과한 전선(w)은 전선홈(55a)을 통과한 후 도광판(10)과 측벽(31)(41)을 경유하여 LED 모듈(20)과 연결된다.

[0029] 그리고, 모서리마감단(50)의 틈새공간마감부(53)에는, 전선홈(55a)과 연통되는 제2전선끼움공(56)이 형성된다.

이러한 제2전선끼움공(56)은, 본원의 LED 라이트보드를 여러개 밀착 연결하여 사용할 때, 각각의 LED 라이트보드의 배면측으로 전선을 빠져나오게 하여 연결하게 위한 목적으로 사용한다. 이에 따라 각각의 LED 라이트보드를 연결하는 전선은 LED 라이트보드의 배면측에 위치되어, 광이 조사되는 전면에서는 전혀 노출되지 않게 된다.

[0030] 상기한 모서리마감단(50)은 플라스틱과 같은 수지재질로 된 것이 바람직하며, 이러한 모서리마감단(50)을 이용하여 제1,2프레임(30)(40)의 모서리부분을 연결함으로써 LED 라이트보드의 모서리 부분을 부드럽게 마감처리할 수 있다.

[0031] 이와 같이, 본원의 LED 라이트보드는, 제1,2상부날개(32)(42)보다 큰 폭을 가지는 제1,2하부날개(33)(43)를 가지는 제1,2프레임(30)(40)을 조립하는 과정에서 발생되는 틈새공간(S)을 메꿈과 동시에 완성된 제품의 모서리부분을 깔끔하게 마감처리할 수 있으므로, 제작 및 시공하는 과정에서 작업자가 상처를 입는 것을 방지할 수 있고, 더 나아가 모서리부분이 마감처리된 본원의 LED 라이트보드는 상품가치성이 높일 수 있게 된다.

[0032] 본 발명은 도면에 도시된 일 실시예를 참고로 설명되었으나 이는 예시적인 것에 불과하며, 본 기술 분야의 통상의 지식을 가진 자라면 이로부터 다양한 변형 및 균등한 타 실시예가 가능하다는 점을 이해할 것이다.

부호의 설명

[0033]

10 ... 도광판	20 ... LED 모듈
21 ... LED	22 ... PCB 기판
30 ... 제1프레임	31 ... 제1측벽
32 ... 제1상부날개	33 ... 제1하부날개
40 ... 제2프레임	41 ... 제2측벽
42 ... 제2상부날개	43 ... 제2하부날개
50 ... 모서리마감단	51 ... 제1끼움단
52 ... 제2끼움단	53 ... 틈새공간마감부
54 ... 단부마감부	55 ... 제1전선끼움공
56 ... 제2전선끼움공	

도면

도면1

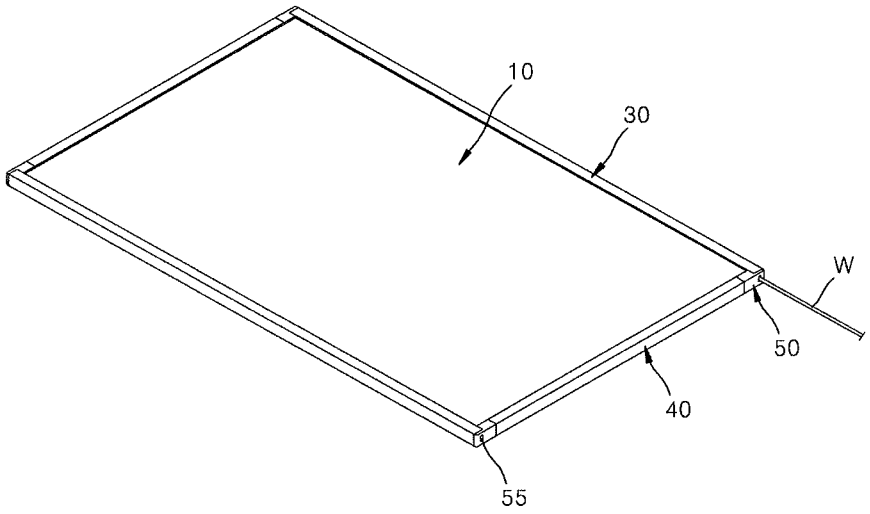

도면2

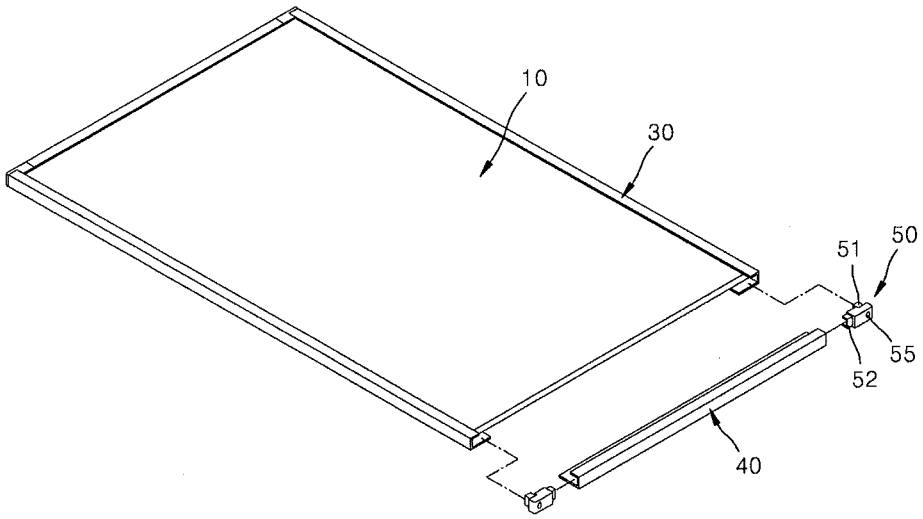

도면3

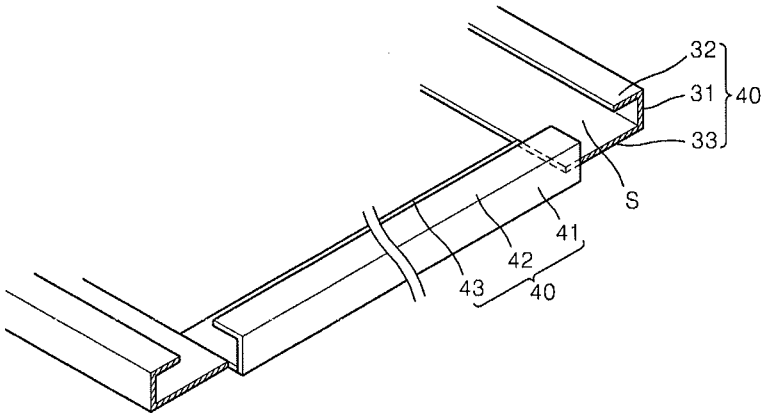

도면4

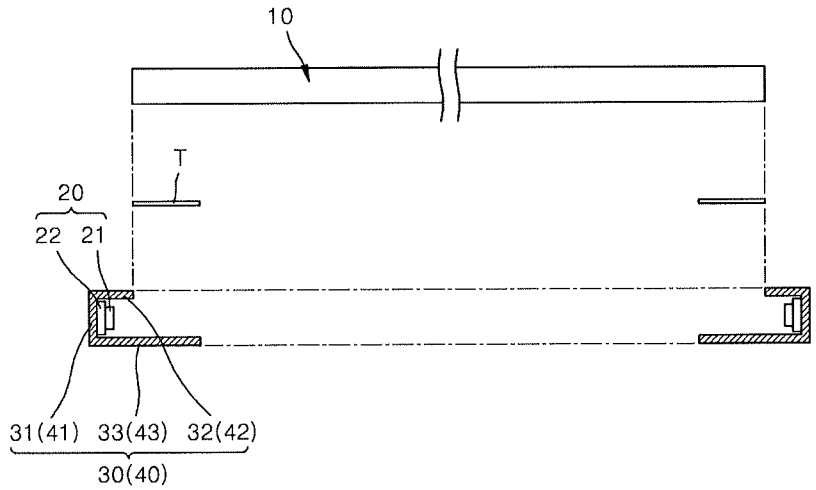
10
T
20
22 21
31(41) 33(43) 32(42)
30(40)

도면5

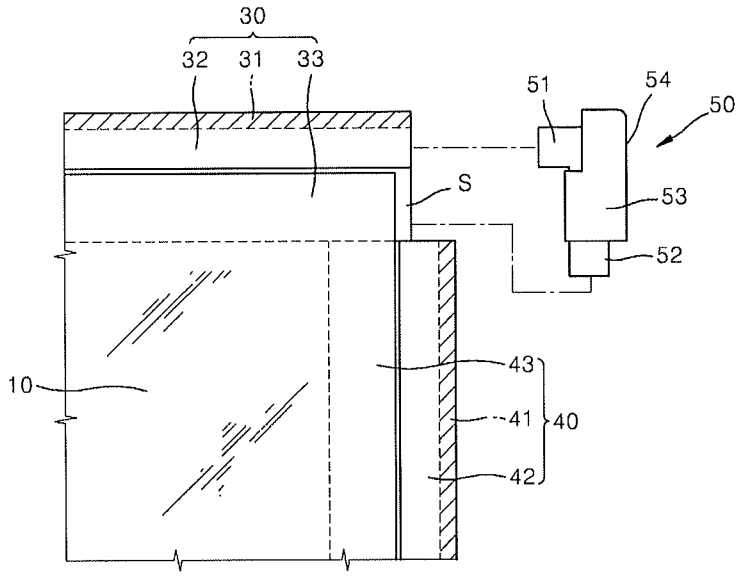
30
32 31 33
51
54
50
S
53
52
10
43
41
40
42

도면6

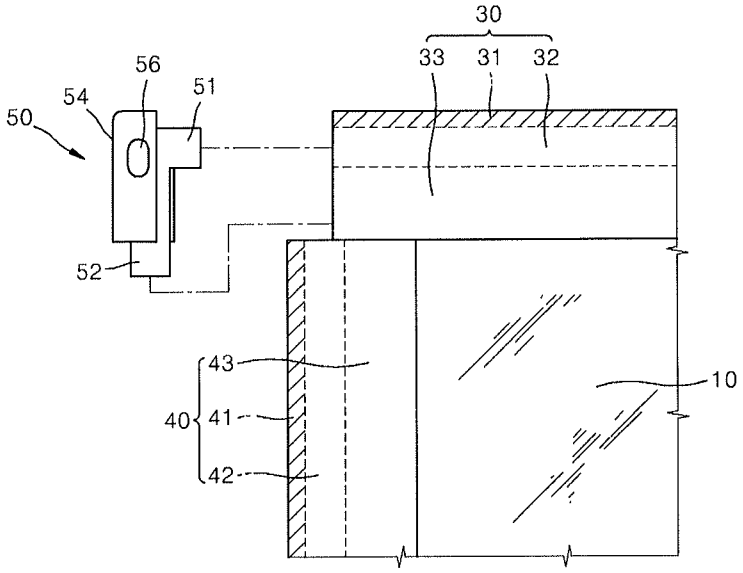

도면7

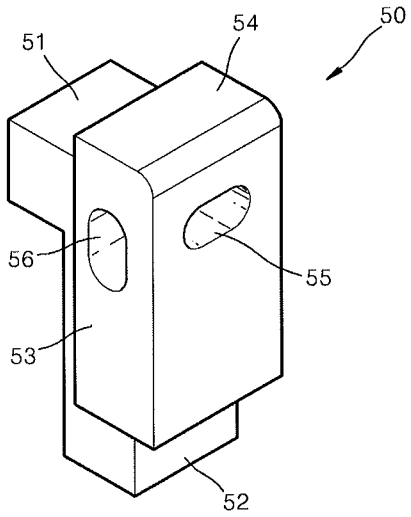

도면8a

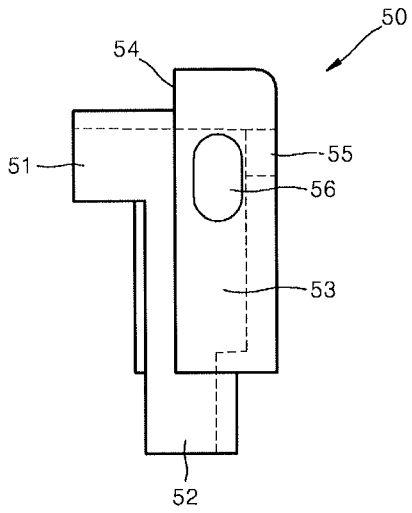

도면8b

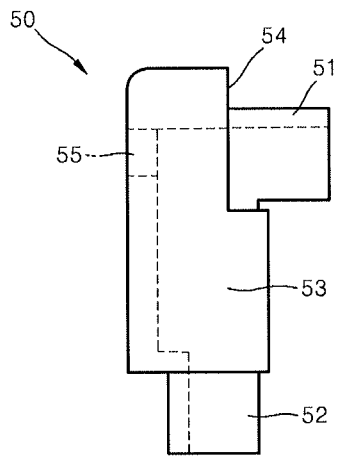

도면8c

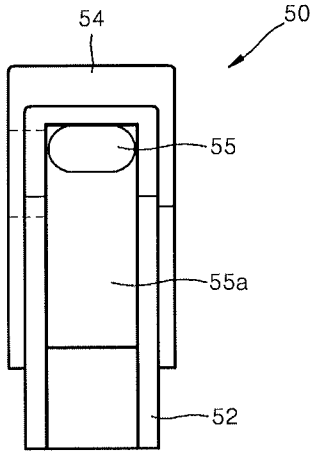

도면8d

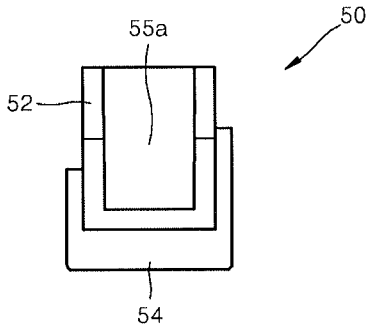

EXHIBIT C

TRANSLATION OF THE ISSUED KOREAN CLAIMS

1. A light emitting diode (LED) light board comprising:

a light guide panel (LGP) shaped as a rectangle for inducing a path and scattering of light;

an LED module disposed at a lateral side of the LGP and comprising a plurality of LEDs for irradiating light;

a first frame having the LED module embedded therein and coupled to one side of an edge of the LGP;

a second frame coupled to the other side of the edge of the LGP perpendicular to both ends of the first frame; and

a corner finishing end on which the first frame and the second frame are connected to each other and corners of the first frame and the second frame are finished,

wherein the first frame comprises a first sidewall formed at one side of an edge of the LGP, a first upper wing bent on an end of the first sidewall, and a first lower wing bent on the other end of the first sidewall, haying a larger width than that of the first upper wing and attached to one bottom surface of the edge of the LGP, and

the second frame comprises a second sidewall formed at the other side of an edge of the LGP, a second upper wing bent on an end of the second sidewall, and a second lower wing bent on the other end of the second sidewall, haying a larger width than that of the second upper wing and attached to the other bottom surface of the edge of the LGP, and

both ends of each of the first frame and the second frame are cut to be perpendicular to each other, and

in order to assemble the first and second frames in the form of a rectangular frame, when an end of a pair of second lower wings is disposed close to a side of a pair of first lower wings, a gap space is formed between the first upper wing and the second upper wing, and

the corner finishing end comprises a first insertion end inserted between the first sidewall and the first upper and lower wings, a second insertion end inserted between the second sidewall and the second upper and lower wings, and a gap space finishing

portion that closes the gap space between the first upper wing and the second upper wing when the first and second insertion ends are inserted into the first and second frames, respectively, and simultaneously forms the same surface as the surface of the first and second upper wings.

2. Cancelled

3. Cancelled

4. The LED light board of claim 1, wherein the corner finishing end further comprises an end finishing portion that protrudes from an end portion of the first insertion end by a thickness of the first sidewall and the first upper and lower wings and finishes end portions of the first sidewall and the first upper and lower wings and not to be exposed when the first insertion end is inserted into the first frame.

5. The LED light board of claim 4, wherein the corner finishing end further comprises an electric wire groove which is formed in the corner finishing end and through which an electric wire is connected to the LED module, and a first electric wire insertion hole which is formed in the end finishing portion and communicates with the electric wire groove.

6. The LED light board of claim 5, wherein the corner finishing end further comprises a second electric wire insertion hole which is formed in the gap space finishing portion and communicates with the electric wire groove.

EXHIBIT D

CERTIFICATE OF TRANSLATION

I, Young-kwan Kim, am competent to translate from Korean into English, and certify that the translation of the claims found to be patentable by the KIPO and is true and accurate to the best of my abilities.

(signature of translator)

Young-kwan Kim
(typed/printed name of translator)

Shin Tae Yang Bldg., Suite 801
(address of translator)

#736-8, Banpo-Dong, Seocho-Gu
(address of translator)

Seoul, 137-040 Korea
(address of translator)

82-2-512-8008
(telephone number of translator)

UNITED STATES PATENT AND TRADEMARK OFFICE

Commissioner for Patents
United States Patent and Trademark Office
P.O. Box 1450
Alexandria, VA 22313-1450
www.uspto.gov

FULBRIGHT & JAWORSKI L.L.P.
98 SAN JACINTO BOULEVARD
SUITE 1100
AUSTIN TX 78701-4255

MAILED

MAR 26 2012

OFFICE OF PETITIONS

In re Application of
KIM
Application No.: 13/183,236
Filed: July 14, 2011
Attorney Docket No.: YKIN.P0009US
For: LED LIGHT BOARD

: DECISION ON REQUEST TO
: PARTICIPATE IN THE PATENT
: PROSECUTION HIGHWAY
: PROGRAM AND PETITION
: TO MAKE SPECIAL UNDER
: 37 CFR 1.102(a)

This is a decision on the request to participate in the Patent Prosecution Highway (PPH) program and the petition under 37 CFR 1.102(a), filed July 20, 2011, and renewed October 11, 2011, to make the above-identified application special.

The request and petition are **GRANTED**.

Discussion

A grantable request to participate in the PPH program and petition to make special require:

1. The U.S. application is

    a. a Paris Convention application which either
        i. validly claims priority under 35 U.S.C. 119(a) and 37 CFR 1.55 to one or more applications filed in the KIPO, or
        ii. validly claims priority under 35 U.S.C. 119(a)/365(a) to a PCT application that contains no priority claims,

    or

    b. a national stage application under the PCT (an application which entered the national stage in the U.S. from a PCT international application after compliance with 35 U.S.C. 371), which PCT application
        i. validly claims priority under 35 U.S.C. 365(b) to an application filed in the KIPO, or
        ii. validly claims priority under 35 U.S.C. 365(b) to a PCT application that contains no priority claims, or
        iii. contains no priority claim,

    or

    c. a so-called bypass application filed under 35 U.S.C. 111(a) which validly claims benefit under 35 U.S.C. 120 to a PCT application, which PCT application

i. validly claims priority under 35 U.S.C. 365(b) to an application filed in the KIPO, or
ii. validly claims priority under 35 U.S.C. 365(b) to a PCT application that contains no priority claims, or
iii. contains no priority claim;

2. Applicant must submit a copy of:
   a. The allowable/patentable claim(s) from the KR application(s);
   b. An English translation of the allowable/patentable claim(s), and
   c. A statement that the English translation is accurate (if the claims were published in a language other than English);
3. Applicant must:
   a. Ensure that all the claims in the U.S. application must sufficiently correspond or be amended to sufficiently correspond to the allowable/patentable claim(s) in the KR application(s), and
   b. Submit a claims correspondence table in English;
4. Examination of the U.S. application has not begun;
5. Applicant must submit:
   a. A copy of all the office actions (which are relevant to patentability), excluding "Decision to Grant a Patent" from each of the KR application(s) containing the allowable/patentable claim(s);
   b. An English language translation of the KIPO office action; and
   c. A statement that the English translation is accurate (if the office actions are not in the English language);
6. Applicant must submit:
   a. An IDS listing the documents cited by the KIPO examiner in the KIPO office action (unless already filed in this application); and
   b. Copies of all the documents cited in the KIPO office action, except U.S. patents or U.S. patent application publications (unless already filed in this application);

The request to participate in the PCT-PPH pilot program and petition comply with the above requirements. Accordingly, the above-identified application has been accorded "special" status.

Inquiries concerning this decision should be directed to the undersigned at (571) 272-6735.

All other inquiries concerning the examination or status of the application is accessible in the PAIR system at http://www.uspto.gov/ebc.index.html.

This application is being forwarded to Technology Center AU 2885 for action on the merits commensurate with this decision.

/Diane Goodwyn/
Diane Goodwyn
Petitions Examiner
Office of Petitions

Doc code : PET.OP.AGE
Description : Petition to make special based on Age/Health

PTO/SB/130 (07-09)
Approved for use through 07/31/2012. OMB 0651- 0031
U.S. Patent and Trademark Office; U.S. DEPARTMENT OF COMMERCE
Under the Paperwork Reduction Act of 1995, no persons are required to respond to a collection of information unless it contains a valid OMB control number

PETITION TO MAKE SPECIAL BASED ON AGE FOR ADVANCEMENT OF EXAMINATION UNDER 37 CFR 1.102(c)(1)

Application Information

Application Number	13/183,283	Confirmation Number	8000	Filing Date	2011-07-14
Attorney Docket Number (optional)	8273/0017PUS1	Art Unit		Examiner	Unassigned
First Named Inventor	Stephen G. Hauser				
Title of Invention	SYSTEM AND DEVICE FOR GOLF PUTTING PRACTICE				

Attention: Office of Petitions
An application may be made special for advancement of examination upon filing of a petition showing that the applicant is 65 years of age, or more. No fee is required with such a petition. See 37 CFR 1.102(c)(1) and MPEP 708.02 (IV).

APPLICANT HEREBY PETITIONS TO MAKE SPECIAL FOR ADVANCEMENT OF EXAMINATION IN THIS APPLICATION UNDER 37 CFR 1.102(c)(1) and MPEP 708.02 (IV) ON THE BASIS OF THE APPLICANT'S AGE.

A grantable petition requires one of the following items:
(1) Statement by one named inventor in the application that he/she is 65 years of age, or more; or
(2) Certification by a registered attorney/agent having evidence such as a birth certificate, passport, driver's license, etc. showing one named inventor in the application is 65 years of age, or more.

Name of Inventor who is 65 years of age, or older

Given Name	Middle Name	Family Name	Suffix
STEPHEN	G.	HAUSER	

A signature of the applicant or representative is required in accordance with 37 CFR 1.33 and 10.18.
Please see 37 CFR 1.4(d) for the format of the signature.

Select (1) or (2) :

○ (1) I am an inventor in this application and I am 65 years of age, or more.

● (2) I am an attorney or agent registered to practice before the Patent and Trademark Office, and I certify that I am in possession of evidence, and will retain such in the application file record, showing that the inventor listed above is 65 years of age, or more.

Signature	/Matthew J. Lattig/	Date (YYYY-MM-DD)	2011-07-14
Name	Matthew J. Lattig	Registration Number	45274

PTO/SB/130 (07-09)
Approved for use through 07/31/2012. OMB 0651- 0031
U.S. Patent and Trademark Office; U.S. DEPARTMENT OF COMMERCE
Under the Paperwork Reduction Act of 1995, no persons are required to respond to a collection of information unless it contains a valid OMB control number

Privacy Act Statement

The Privacy Act of 1974 (P.L. 93-579) requires that you be given certain information in connection with your submission of the attached form related to a patent application or patent. Accordingly, pursuant to the requirements of the Act, please be advised that: (1) the general authority for the collection of this information is 35 U.S.C. 2(b)(2); (2) furnishing of the information solicited is voluntary; and (3) the principal purpose for which the information is used by the U.S. Patent and Trademark Office is to process and/or examine your submission related to a patent application or patent. If you do not furnish the requested information, the U.S. Patent and Trademark Office may not be able to process and/or examine your submission, which may result in termination of proceedings or abandonment of the application or expiration of the patent.

The information provided by you in this form will be subject to the following routine uses:

1. The information on this form will be treated confidentially to the extent allowed under the Freedom of Information Act (5 U.S.C. 552) and the Privacy Act (5 U.S.C. 552a). Records from this system of records may be disclosed to the Department of Justice to determine whether the Fr eedom of Information Act requires disclosure of these records.

2. A record from this system of records may be disclosed, as a routine use, in the course of presenting evidence to a court, magistrate, or administrative tribunal, including disclosures to opposing counsel in the course of settlement negotiations.

3. A record in this system of records may be disclosed, as a routine use, to a Member of Congress submitting a request involving an individual, to whom the record pertains, when the individual has requested assistance from the Member with respect to the subject matter of the record.

4. A record in this system of records may be disclosed, as a routine use, to a contractor of the Agency having need for the information in order to perform a contract. Recipients of information shall be required to comply with the requirements of the Privacy Act of 1974, as amended, pursuant to 5 U.S.C. 552a(m).

5. A record related to an International Application filed under the Patent Cooperation Treaty in this system of records may be disclosed, as a routine use, to the International Bureau of the World Intellectual Property Organization, pursuant to the Patent Cooperation Treaty.

6. A record in this system of records may be disclosed, as a routine use, to another federal agency for purposes of National Security review (35 U.S.C. 181) and for review pursuant to the Atomic Energy Act (42 U.S.C. 218(c)).

7. A record from this system of records may be disclosed, as a routine use, to the Administrator, General Services, or his/her designee, during an inspection of records conducted by GSA as part of that agency's responsibility to recommend improvements in records management practices and programs, under authority of 44 U.S.C. 2904 and 2906. Such disclosure shall be made in accordance with the GSA regulations governing inspection of records for this purpose, and any other relevant (i.e., GSA or Commerce) directive. Such disclosure shall not be used to make determinations about indivi duals.

8. A record from this system of records may be disclosed, as a routine use, to the public after either publication of the application pursuant to 35 U.S.C. 122(b) or issuance of a patent pursuant to 35 U.S.C. 151. Further, a record may be disclosed, subject to the limitations of 37 CFR 1.14, as a routine use, to the public if the record was filed in an application which became abandoned or in which the proceedings were terminated and which application is referenced by either a published application, an application open to public inspections or an issued patent.

9. A record from this system of records may be disclosed, as a routine use, to a Federal, State, or local law enforcement agency, if the USPTO becomes aware of a violation or potential violation of law or regulation.

UNITED STATES PATENT AND TRADEMARK OFFICE

Commissioner for Patents
United States Patent and Trademark Office
P.O. Box 1450
Alexandria, VA 22313-1450
www.uspto.gov

In re Application of
Stephen G. Hauser

Application No. 13183283

Filed:

Attorney Docket No. 8273/0017PUS1

:DECISION ON PETITION TO MAKE SPECIAL
:UNDER 37 CFR 1.102(c)(1)

This is a decision on the electronic petition under 37 CFR 1.102 (c)(1), filed 14-JUL-2011 to make the above-identified application special based on applicant's age as set forth in MPEP § 708.02, Section IV.

The petition is **GRANTED**.

A grantable petition to make an application special under 37 CFR 1.102(c)(1), MPEP § 708.02, Section IV: Applicant's Age must include a statement by applicant or a registered practitioner having evidence that applicant is at least 65 years of age. No fee is required.

Accordingly, the above-identified application has been accorded "special" status and will be taken up for action by the examiner upon the completion of all pre-examination processing.

Telephone inquiries concerning this electronic decision should be directed to the Electronic Business Center at 866-217-9197.

All other inquiries concerning either the examination or status of the application should be directed to the Technology Center.

UNITED STATES PATENT AND TRADEMARK OFFICE

UNITED STATES DEPARTMENT OF COMMERCE
United States Patent and Trademark Office
Address: COMMISSIONER FOR PATENTS
P.O. Box 1450
Alexandria, Virginia 22313-1450
www.uspto.gov

APPLICATION NO.	FILING DATE	FIRST NAMED INVENTOR	ATTORNEY DOCKET NO.	CONFIRMATION NO.
13/183,313	07/14/2011	Michael Brykalski	AMERGN.187C1	8079

20995 7590 10/04/2011

KNOBBE MARTENS OLSON & BEAR LLP
2040 MAIN STREET
FOURTEENTH FLOOR
IRVINE, CA 92614

EXAMINER	
CUOMO, PETER M	
ART UNIT	**PAPER NUMBER**
3673	

NOTIFICATION DATE	DELIVERY MODE
10/04/2011	ELECTRONIC

Please find below and/or attached an Office communication concerning this application or proceeding.

The time period for reply, if any, is set in the attached communication.

Notice of the Office communication was sent electronically on above-indicated "Notification Date" to the following e-mail address(es):

jcartee@kmob.com
efiling@kmob.com
eOAPilot@kmob.com

UNITED STATES PATENT AND TRADEMARK OFFICE

Commissioner for Patents
United States Patent and Trademark Office
P.O. Box 1450
Alexandria, VA 22313-1450
www.uspto.gov

OCT - 3 2011

KNOBBE MARTENS OLSON & BEAR LLP
2040 MAIN STREET
FOURTEENTH FLOOR
IRVINE, CA 92614

In re application of BRYKALSKI et al. Application No. 13/183,313 Filed: July 14, 2011 For: ENVIRONMENTALLY-CONDITIONED TOPPER MEMBER FOR BEDS	:	DECISION ON PETITION TO MAKE SPECIAL FOR NEW APPLICATION UNDER 37 CFR 1.102

This is a decision on the petition filed on July 14, 2011 to make the above-identified application special for accelerated examination procedure under 37 C.F.R. § 1.102(d).

The petition to make the application special is **DISMISSED.**

REGULATION AND PRACTICE

A grantable petition to make special under 37 C.F.R. § 1.102(d) and pursuant to the "Change to Practice for Petitions in Patent Applications to Make Special and for Accelerated Examination" published in the Federal Register on June 26, 2006 (71 Fed. Reg. 36323), must satisfy the following conditions:

I. Conditions Regarding the Application:

1. the application must be a non-reissue utility or design application filed under 37 CFR 1.111(a);

2. the application, the petition and the required fees must be filed electronically using the USPTO's electronic filing system (EFS), or EFS-web; if not filed electronically, a statement asserting that EFS and EFS-web were not available during the normal business hours;

3. at the time of filing, the application must be complete under 37 CFR 1.51 and in condition for examination;

4. the application must contain three or fewer independent claims and twenty or fewer total claims and the claims must be directed to a single invention.

II. Conditions Regarding the Petition:

The petition must:

1. be filed with the application;

2. include a statement that applicant agrees not to separately argue the patentability of any dependent claim during any appeal in the application;

3. include a statement that applicant agrees to make an election without traverse in a telephone interview.

4. include a statement that applicant agrees to conduct such an interview when requested by the examiner.

5. include a statement, made based on a good faith belief, that a preexamination search in compliance with the following requirements, was conducted, including an identification of the field of search by United States class and subclass, where applicable, and for database searches, the search logic or chemical structure or sequence used as a query, the name of the file(s) searched and the database service, and the date of the search.

The preexamination search must:

5.1 involve U.S. patents and patent application publications, foreign patent documents, and non-patent literature, unless the applicant can justify with reasonable certainty that no references more pertinent than those already identified are likely to be found in the eliminated sources and includes such a justification with this statement;

5.2. be directed to the claimed invention and encompass all of the features of the claims, giving the claims the broadest reasonable interpretation;

5.3. encompass the disclosed features that may be claimed.

6. must provide in support of the petition an accelerated examination support document.

An accelerated examination support document must include:

6.1. an information disclosure statement (IDS) in compliance with 37 CFR 1.98 citing each reference deemed most closely related to the subject matter of each of the claims;

6.2. an identification of all the limitations in the claims that are disclosed by the reference specifying where the limitation is disclosed in the cited reference;

6.3. a detailed explanation of how each of the claims is patentable over the references cited with particularity required by 37 CFR 1.111(b) and (c);

6.4. a concise statement of the utility of the invention as defined in each of the independent claims (unless the application is a design application);

6.5. a showing of where each limitation of the claims finds support under 35 USC 112, first paragraph, in the written description of the specification. If applicable, the showing must also identify: (1) each means- (or step) plus-function claim element

that invokes consideration under 35 USC 112, sixth paragraph; and (2) the structure, material, or acts in the specification that corresponds to each means- (or step) plus-function claim element that invokes consideration under 35 USC 112, sixth paragraph; if the application claims the benefit of one or more applications under title 35, United States Code, the showing must also include where each limitation of the claims finds support under 35 USC 112, first paragraph, in each such application in which such supports exists;

6.6. an identification of any cited references that may be disqualified under 35 USC 103(c).

REVIEW OF FACTS

The petition fails to comply with conditions II.5.2, II.6.3 and II.6.5.

As to condition II.5.2, the petition lacks an indication of a preexamination search that encompasses all of the features of the claims. Specifically, with respect to the classification search, in addition to the areas already searched, the search needs to include a search of 5/691, 713, 714 and 726; 219/212; 62/3.5 and 261. It is noted that applicant indicates that a search of class 657/104 and 112 were performed. However, no such class exists. Applicant is required to provide clarification in response to this petition decision.

As to condition II.6.3, there is not a satisfactory detailed explanation of claim patentability over each of the references. While the explanation provided for the independent claims appears to be acceptable, the explanation needs to specify how **each** of the claims are patentable over each of the cited references, which includes the need to specify whether **each of the dependent claims are separately patentable beyond the limitations contained in the independent claims**, and if so how, or a statement made that the dependent claims are not separately patentable. When explaining that a limitation is not taught by the prior art, it should be made clear which specific portion of the limitation is not taught or make it clear that no part of the limitation is taught by any of the references. With respect to the dependent claims, the statement that "one or more of these dependent claims is distinguished over the references...in view of additional limitations defined in each of the claims" is not sufficient. Each claim which is distinguished over the references must be specifically identified by claim number, and if so, an explanation of how must be provided.

As to condition II.6.5, the showing of where each limitation of each of the claims finds support under 35 USC 112 in the written description of the application is insufficient. For each claimed limitation (including dependent claims) the petition needs to identify specific passages, or at least a single paragraph where each limitation is supported. Listing broadly a number of figures does not comply with what is required. Applicant has provided support for the claimed invention in the parent applications; however, similar support for the claimed invention must additionally be shown in the instant application.

Accordingly, the petition fails to meet the required conditions to be accorded special status under the accelerated examination procedure.

DECISION

For the above stated reasons, the petition is **DISMISSED**. The application will therefore be taken up by the examiner for action in its regular turn.

Petitioner is given a single opportunity to perfect the petition. Any request for reconsideration of this decision must be submitted within one (1) month or thirty (30) days, whichever is longer, from the date of this decision. No extensions of time will be granted under 37 CFR 1.136(a) if the request is to be considered timely. Any request for reconsideration must address the deficiencies indicated above.

Petitioner is reminded that, upon granting of the special status of the application on request for reconsideration, the application will be processed expeditiously. However, due to the dismissal of the instant petition, examination may not be completed within twelve months of the filing date of the application.

Any inquiry regarding this decision should be directed to Teri P. Luu, Quality Assurance Specialist, at (571) 272-7045.

/Teri P. Luu/
Teri P. Luu
Quality Assurance Specialist
Technology Center 3600

tl: 09/30/11

UNITED STATES PATENT AND TRADEMARK OFFICE

UNITED STATES DEPARTMENT OF COMMERCE
United States Patent and Trademark Office
Address: COMMISSIONER FOR PATENTS
P.O. Box 1450
Alexandria, Virginia 22313-1450
www.uspto.gov

APPLICATION NO.	FILING DATE	FIRST NAMED INVENTOR	ATTORNEY DOCKET NO.	CONFIRMATION NO.
13/183,313	07/14/2011	Michael Brykalski	AMERGN.187C1	8079

20995 7590 11/22/2011

KNOBBE MARTENS OLSON & BEAR LLP
2040 MAIN STREET
FOURTEENTH FLOOR
IRVINE, CA 92614

EXAMINER	
TRETTEL, MICHAEL	
ART UNIT	**PAPER NUMBER**
3673	

NOTIFICATION DATE	DELIVERY MODE
11/22/2011	ELECTRONIC

Please find below and/or attached an Office communication concerning this application or proceeding.

The time period for reply, if any, is set in the attached communication.

Notice of the Office communication was sent electronically on above-indicated "Notification Date" to the following e-mail address(es):

jcartee@kmob.com
efiling@kmob.com
eOAPilot@kmob.com

UNITED STATES PATENT AND TRADEMARK OFFICE

Commissioner for Patents
United States Patent and Trademark Office
P.O. Box 1450
Alexandria, VA 22313-1450
www.uspto.gov

NOV 21 2011

KNOBBE MARTENS OLSON & BEAR LLP
2040 MAIN STREET
FOURTEENTH FLOOR
IRVINE, CA 92614

In re application of	:	
BRYKALSKI et al.	:	DECISION ON PETITION
Application No. 13/183,313	:	TO MAKE SPECIAL FOR
Filed: July 14, 2011	:	NEW APPLICATION
For: ENVIRONMENTALLY-CONDITIONED TOPPER MEMBER FOR BEDS	:	UNDER 37 CFR 1.102

This is a decision on the renewed petition filed on November 4, 2011 to make the above-identified application special for accelerated examination procedure under 37 C.F.R. § 1.102(d).

The petition to make the application special is **DENIED**.

A petition to make special was filed in the above-identified application under 37 CFR 1.102(d) on July 14, 2011. The petition was dismissed in a decision mailed October 4, 2011.

The reasons for dismissal were an inadequate classification that encompasses all of the features of the claims (condition II.5.2), there not being a satisfactory detailed explanation of claim patentability over each of the references (condition II.6.3) and the showing of where each limitation of each of the claims finds support under 35 USC 112 (condition II.6.5) was insufficient.

With regards to condition II.5.2, the classification search provided in the initial AE search document was insufficient because it did not include certain classifications deemed necessary to encompass all of the features of the claimed invention. Specifically, in addition to the areas already searched on June 16, 2011, the search also needed to include a search of 5/691, 713, 714 and 726; 219/212; 62/3.5 and 261. The renewed petition includes an updated AE search document. However, the search document fails to indicate that a search of the preceding classifications was performed.

With regards to condition II.6.3, the undersign acknowledges that applicant "is not providing an explanation of how each of claims" 2-4, 6-10 and 12-20 "is separately patentable beyond the limitations contained in independent" claims 1 and 11.

Accordingly, applicant's statement precludes applicant from arguing separately the patentability of these claims.

With regards to condition II.6.5, the undersign withdraws the indication of the insufficiency the AE Support Document filed July 14, 2011.

Since applicant has not provided an adequate search document as explained above, the petition is denied. The application will therefore be taken up by the examiner for action in its regular turn. Petitioner is reminded that a single opportunity to perfect the petition is given. Therefore, further petitions for accelerated examination in this application will not be entertained.

Any inquiry regarding this decision should be directed to Quality Assurance Specialist Teri P. Luu at (571) 272-7045.

/Teri P. Luu/

Teri P. Luu
Quality Assurance Specialist
Technology Center 3600

UNITED STATES PATENT AND TRADEMARK OFFICE

Commissioner for Patents
United States Patent and Trademark Office
P.O. Box 1450
Alexandria, VA 22313-1450
www.uspto.gov

SILICON VALLEY PATENT AGENCY
7394 WILDFLOWER WAY
CUPERTINO CA 95014

MAILED
SEP 27 2011
OFFICE OF PETITIONS

In re Application of :
Hu, et al. : DECISION ON PETITION
Application No. 13/183,429 :
Deposited: July 15, 2011 :
Atty. Docket No. 889712-33 :

This is a decision on the "Petition under 37 CFR 1.57," filed September 14, 2011, requesting that the above-referenced application be accorded a filing date of July 15, 2011.

Application papers in the above-identified application were filed on July 15, 2011. However, on August 1, 2011, the Office of Patent Application Processing mailed applicants a "Notice of Incomplete Nonprovisional Application," notifying applicants, *inter alia*, that the application papers had not been accorded a filing date because the application was deposited without a complete specification including at least one claim as prescribed by 35 U.S.C. 112.

In response, applicants timely filed this petition. In which, applicants acknowledge inadvertently omitting a copy of the claims from the parent application on submission of the instant continuation application. Applicants argue, however, that the filing date of July 15, 2011, should still be accorded pursuant to § 1.57(a)(3).

The applicable rule provides (in pertinent part):

§ 1.57 Incorporation by reference.

(a) Subject to the conditions and requirements of this paragraph, if all or a portion of the specification or drawing(s) is inadvertently omitted from an application, but the application contains a claim under § 1.55 for priority of a

prior-filed foreign application, or a claim under § 1.78 for the benefit of a prior-filed provisional, nonprovisional, or international application, that was present on the filing date of the application, and the inadvertently omitted portion of the specification or drawing(s) is completely contained in the prior-filed application, the claim under § 1.55 or § 1.78 shall also be considered an incorporation by reference of the prior-filed application as to the inadvertently omitted portion of the specification or drawing(s).

(1) The application must be amended to include the inadvertently omitted portion of the specification or drawing(s) within any time period set by the Office, but in no case later than the close of prosecution as defined by § 1.114(b), or abandonment of the application, whichever occurs earlier. The applicant is also required to:

(i) Supply a copy of the prior-filed application, except where the prior-filed application is an application filed under 35 U.S.C. 111;

(ii) Supply an English language translation of any prior-filed application that is in a language other than English; and

(iii) Identify where the inadvertently omitted portion of the specification or drawings can be found in the prior-filed application.

...

(3) If an application is not otherwise entitled to a filing date under § 1.53(b), the amendment must be by way of a petition pursuant to this paragraph accompanied by the fee set forth in § 1.17(f).

It is noted that the application as filed included a claim under 1.78 for the benefit of prior-filed application No. 11/065,699. Thus, pursuant to 1.57, the application as filed is considered to have incorporated by reference the prior filed application as to the inadvertently omitted portion of the specification.

However, the petition does not satisfy (iii) above. Applicants have not identified where the inadvertently omitted portion of the specification can be found in the prior-filed application. The phrase "completely contained" in 37 CFR 1.57(s) requires that the material to be added to the later-filed application

under 37 CFR 1.57(s) must be expressly, as opposed to implicitly, disclosed in the prior-filed application. Furthermore, the material to be added must be completely contained in the prior-filed application as filed since it is the prior application as filed which is being incorporated under 37 CFR 1.57(a). MPEP 201.17(III)(D)

In view thereof, the petition is **DISMISSED**.

Applicants are reminded that they may file a preliminary amendment if they desire to make changes to the claims in the parent application.

Further correspondence with respect to this matter should be delivered through one of the following mediums:

By mail: Mail Stop PETITIONS
Commissioner for Patents
Post Office Box 1450
Alexandria, VA 22313-1450

By hand: Customer Service Window
Mail Stop Petitions
Randolph Building
401 Dulany Street
Alexandria, VA 22314

By fax: (571) 273-8300
ATTN: Office of Petitions

By internet: EFS-Web
www.uspto.gov/ebc/efs_help.html
(for help using EFS-Web call the Patent Electronic Business Center at (866) 217-9197)

Telephone inquiries concerning this matter may be directed to Senior Petitions Attorney Shirene Willis Brantley at (571) 272-3230.

Chris Bottorff
Supervisor
Office of Petitions

UNITED STATES PATENT AND TRADEMARK OFFICE

Commissioner for Patents
United States Patent and Trademark Office
P.O. Box 1450
Alexandria, VA 22313-1450
www.uspto.gov

SILICON VALLEY PATENT AGENCY
7394 WILDFLOWER WAY
CUPERTINO CA 95014

MAILED

OCT 13 2011

OFFICE OF PETITIONS

In re Application of :
Hu, et al. : DECISION ON PETITION
Application No. 13/183,429 :
Deposited: July 15, 2011 :
Atty. Docket No. 889712-33 :

This is a decision on the renewed "Petition under 37 CFR 1.57," filed October 1, 2011, requesting that the above-referenced application be accorded a filing date of July 15, 2011.

Application papers in the above-identified application were filed on July 15, 2011. However, on August 1, 2011, the Office of Patent Application Processing mailed applicants a "Notice of Incomplete Nonprovisional Application," notifying applicants, *inter alia*, that the application papers had not been accorded a filing date because the application was deposited without a complete specification including at least one claim as prescribed by 35 U.S.C. 112.

In response, applicants timely filed a petition under 37 CFR 1.57 on September 14, 2011. The first petition was dismissed on September 27, 2011. Petitioners filed the present renewed petition on October 1, 2011.

Applicants acknowledge inadvertently omitting a copy of the claims from the parent application on submission of the instant continuation application. Applicants argue, however, that the filing date of July 15, 2011, should still be accorded pursuant to § 1.57(a)(3).

The applicable rule provides (in pertinent part):

§ 1.57 Incorporation by reference.

(a) Subject to the conditions and requirements of this paragraph, if all or a portion of the specification or drawing(s) is inadvertently omitted from an application, but the application contains a claim under § 1.55 for priority of a prior-filed foreign application, or a claim under § 1.78 for the benefit of a prior-filed provisional, nonprovisional, or international application, that was present on the filing date of the application, and the inadvertently omitted portion of the specification or drawing(s) is completely contained in the prior-filed application, the claim under § 1.55 or § 1.78 shall also be considered an incorporation by reference of the prior-filed application as to the inadvertently omitted portion of the specification or drawing(s).

(1) The application must be amended to include the inadvertently omitted portion of the specification or drawing(s) within any time period set by the Office, but in no case later than the close of prosecution as defined by § 1.114(b), or abandonment of the application, whichever occurs earlier. The applicant is also required to:

(i) Supply a copy of the prior-filed application, except where the prior-filed application is an application filed under 35 U.S.C. 111;

(ii) Supply an English language translation of any prior-filed application that is in a language other than English; and

(iii) Identify where the inadvertently omitted portion of the specification or drawings can be found in the prior-filed application.

...

(3) If an application is not otherwise entitled to a filing date under § 1.53(b), the amendment must be by way of a petition pursuant to this paragraph accompanied by the fee set forth in § 1.17(f).

It is noted that the application as filed included a claim under 1.78 for the benefit of prior-filed application No. 11/065,699. Thus, pursuant to 1.57, the application as filed is considered to have incorporated by reference the prior filed application as to the inadvertently omitted portion of the specification.

The instant petition includes an amendment adding the inadvertently omitted claims and an identification of where the inadvertently omitted portions of the specification may be found in the prior-filed application, along with the necessary petition fee.

In view of the incorporation by reference of the prior application, the claims supplied on October 1, 2011, would not constitute new matter if they were a part of the original disclosure of the prior application. Of course, the examiner is expected to compare the claims supplied on October 1, 2011, to the claims of prior application No. 11/065,699 in order to verify that they are an accurate copy of the prior claims and that they contain no new matter.

In view thereof, the petition is GRANTED.

The application is being forwarded to the Office of Patent Application Processing (OPAP) for according of a filing date of July 15, 2011, as a continuation application under 37 CFR 1.53(b) of prior application No. 11/065,699, including the copy of the claims from the prior application supplied on October 1, 2011. Applicants will receive appropriate notifications regarding the fees owed, if any, and other information in due course from OPAP.

Telephone inquiries concerning this matter may be directed to Senior Petitions Attorney Shirene Willis Brantley at (571) 272-3230.

Chris Bottorff
Supervisor
Office of Petitions

Doc Code: PPH.PCT.652
Document Description: Petition to make special under PCT-Patent Pros Hwy

PTO/SB/20PCT-EP (05-10)
Approved for use through 01/31/2012. OMB 0651-0058
U.S. Patent and Trademark Office; U. S. DEPARTMENT OF COMMERCE
Under the Paperwork Reduction Act of 1995, no persons are required to respond to a collection of information unless it displays a valid OMB control number.

REQUEST FOR PARTICIPATION IN THE PATENT COOPERATION TREATY - PATENT PROSECUTION HIGHWAY (PCT-PPH) PILOT PROGRAM BETWEEN THE EUROPEAN PATENT OFFICE (EPO) AND THE USPTO

Application No:	13/183,486	Filing date:	July 15, 2011
First Named Inventor:	Yoichiro Yamamoto		
Title of the Invention:	Apparatus and Method for Folding Articles		

THIS REQUEST FOR PARTICIPATION IN THE PCT-PPH PILOT PROGRAM ALONG WITH THE REQUIRED DOCUMENTS MUST BE SUBMITTED VIA EFS-WEB. INFORMATION REGARDING EFS-WEB IS AVAILABLE AT HTTP://WWW.USPTO.GOV/EBC/EFS_HELP.HTML

APPLICANT HEREBY REQUESTS PARTICIPATION IN THE PCT-PPH PROGRAM AND PETITIONS TO MAKE THE ABOVE-IDENTIFIED APPLICATION SPECIAL UNDER THE PCT-PPH PROGRAM.

The above-identified application is (1) a national stage entry of the corresponding PCT application, or (2) a national stage entry of another PCT application which claims priority to the corresponding PCT application, or (3) a national application that claims domestic/ foreign priority to the corresponding PCT application, or (4) a national application which forms the basis for the priority claim in the corresponding PCT application, or (5) a continuing application of a U.S. application that satisfies one of (1) to (4) above, or (6) a U.S. application that claims domestic benefit to a U.S. provisional application which forms the basis for the priority claim in the corresponding PCT application.

The corresponding PCT application number(s) is/are: PCT/US2011/044098

The international filing date of the corresponding PCT application(s) is/are: July 15, 2011

I. List of Required Documents:

a. **A copy of the latest international work product (WO/ISA, WO/IPEA, or IPER) in the above–identified corresponding PCT application(s)**

☒ Is attached

☐ Is not attached because the document is already in the U.S. application.

b. **A copy of all claims which were indicated as having novelty, inventive step and industrial applicability in the above-identified corresponding PCT application(s).**

☒ Is attached.

☐ Is not attached because the document is already in the U.S. application.

c. **English translations of the documents in a. and b. above are attached (if the documents are not in the English language). A statement that the English translation is accurate is attached for the document in b. above.**

This collection of information is required by 35 U.S.C. 119, 37 CFR 1.55, and 37 CFR 1.102(d). The information is required to obtain or retain a benefit by the public, which is to file (and by the USPTO to process) an application. Confidentiality is governed by 35 U.S.C. 122 and 37 CFR 1.11 and 1.14. This collection is estimated to take 2 hours to complete, including gathering, preparing, and submitting the completed application form to the USPTO. Time will vary depending upon the individual case. Any comments on the amount of time you require to complete this form and/or suggestions for reducing this burden should be sent to the Chief Information Officer, U.S. Patent and Trademark Office, U.S. Department of Commerce, P.O. Box 1450, Alexandria, VA 22313-1450. DO NOT SEND FEES OR COMPLETED FORMS TO THIS ADDRESS.

PTO/SB/20PCT-EP (05-10)
Approved for use through 01/31/2012. OMB 0651-0058
U.S.Patent and Trademark Office; U.S. DEPARTMENT OF COMMERCE
Under the Paperwork Reduction Act of 1995, no persons are required to respond to a collection of information unless it displays a valid OMB control number.

REQUEST FOR PARTICIPATION IN THE PCT-PPH PILOT PROGRAM BETWEEN THE EPO AND THE USPTO

(continued)

Application No.:	13/183,486
First Named Inventor:	Yoichiro Yamamoto

d. **(1) An information disclosure statement listing the documents cited in the international work products (ISR, WO/ISA, WO/IPEA, IPER) of the corresponding PCT application.**

☐ Is attached

☒ Has already been filed in the above-identified U.S. application on September 28, 2011

(2) Copies of all documents (except) for U.S. patents or U.S. patent application publications)

☐ Are attached.

☒ Have already been filed in the above-identified U.S. application on September 28, 2011

II. Claims Correspondence Table:

Claims in US Application	Patentable Claims in the corresponding PCT Application	Explanation regarding the correspondence
1-13	1-13	Please see attached claims correspondence table.
14-20	Not Applicable	Claims 14-20 are cancelled by the Preliminary Amendment submitted herewith.

III. All the claims in the US application sufficiently correspond to the patentable claims in the corresponding PCT application.

Signature /Abbey A. Lopez/	Date November 15, 2011
Name (Print/Typed) Abbey A. Lopez	Registration Number 67,997

Privacy Act Statement

The **Privacy Act of 1974 (P.L. 93-579)** requires that you be given certain information in connection with your submission of the attached form related to a patent application or patent. Accordingly, pursuant to the requirements of the Act, please be advised that: (1) the general authority for the collection of this information is 35 U.S.C. 2(b)(2); (2) furnishing of the information solicited is voluntary; and (3) the principal purpose for which the information is used by the U.S. Patent and Trademark Office is to process and/or examine your submission related to a patent application or patent. If you do not furnish the requested information, the U.S. Patent and Trademark Office may not be able to process and/or examine your submission, which may result in termination of proceedings or abandonment of the application or expiration of the patent.

The information provided by you in this form will be subject to the following routine uses:

1. The information on this form will be treated confidentially to the extent allowed under the Freedom of Information Act (5 U.S.C. 552) and the Privacy Act (5 U.S.C 552a). Records from this system of records may be disclosed to the Department of Justice to determine whether disclosure of these records is required by the Freedom of Information Act.
2. A record from this system of records may be disclosed, as a routine use, in the course of presenting evidence to a court, magistrate, or administrative tribunal, including disclosures to opposing counsel in the course of settlement negotiations.
3. A record in this system of records may be disclosed, as a routine use, to a Member of Congress submitting a request involving an individual, to whom the record pertains, when the individual has requested assistance from the Member with respect to the subject matter of the record.
4. A record in this system of records may be disclosed, as a routine use, to a contractor of the Agency having need for the information in order to perform a contract. Recipients of information shall be required to comply with the requirements of the Privacy Act of 1974, as amended, pursuant to 5 U.S.C. 552a(m).
5. A record related to an International Application filed under the Patent Cooperation Treaty in this system of records may be disclosed, as a routine use, to the International Bureau of the World Intellectual Property Organization, pursuant to the Patent Cooperation Treaty.
6. A record in this system of records may be disclosed, as a routine use, to another federal agency for purposes of National Security review (35 U.S.C. 181) and for review pursuant to the Atomic Energy Act (42 U.S.C. 218(c)).
7. A record from this system of records may be disclosed, as a routine use, to the Administrator, General Services, or his/her designee, during an inspection of records conducted by GSA as part of that agency's responsibility to recommend improvements in records management practices and programs, under authority of 44 U.S.C. 2904 and 2906. Such disclosure shall be made in accordance with the GSA regulations governing inspection of records for this purpose, and any other relevant (*i.e.*, GSA or Commerce) directive. Such disclosure shall not be used to make determinations about individuals.
8. A record from this system of records may be disclosed, as a routine use, to the public after either publication of the application pursuant to 35 U.S.C. 122(b) or issuance of a patent pursuant to 35 U.S.C. 151. Further, a record may be disclosed, subject to the limitations of 37 CFR 1.14, as a routine use, to the public if the record was filed in an application which became abandoned or in which the proceedings were terminated and which application is referenced by either a published application, an application open to public inspection or an issued patent.
9. A record from this system of records may be disclosed, as a routine use, to a Federal, State, or local law enforcement agency, if the USPTO becomes aware of a violation or potential violation of law or regulation.

PATENT COOPERATION TREATY

From the INTERNATIONAL SEARCHING AUTHORITY

To:
Hughett, Eileen L.
THE PROCTER & GAMBLE COMPANY
Global Patent Services
299 E. Sixth Street, Sycamore Bldg., 4th Floor
Cincinnati OH 45202
ETATS-UNIS D'AMERIQUE

PCT

NOTIFICATION OF TRANSMITTAL OF THE INTERNATIONAL SEARCH REPORT AND THE WRITTEN OPINION OF THE INTERNATIONAL SEARCHING AUTHORITY, OR THE DECLARATION

(PCT Rule 44.1)

Applicant's or agent's file reference 11804Q-DW	Date of mailing *(day/month/year)* 30 August 2011 (30-08-2011)
International application No. PCT/US2011/044098	**FOR FURTHER ACTION** See paragraphs 1 and 4 below
Applicant THE PROCTER & GAMBLE COMPANY	International filing date *(day/month/year)* 15 July 2011 (15-07-2011)

1. [X] The applicant is hereby notified that the international search report and the written opinion of the International Searching Authority have been established and are transmitted herewith.

   Filing of amendments and statement under Article 19:
   The applicant is entitled, if he so wishes, to amend the claims of the International Application (see Rule 46):

   When? The time limit for filing such amendments is normally two months from the date of transmittal of the International Search Report.

   Where? Directly to the International Bureau of WIPO, 34 chemin des Colombettes 1211 Geneva 20, Switzerland, Fascimile No.: (41-22) 338.82.70

   For more detailed instructions, see *PCT Applicant's Guide*, International Phase, paragraphs 9.004 - 9.011.

2. [ ] The applicant is hereby notified that no international search report will be established and that the declaration under Article 17(2)(a) to that effect and the written opinion of the International Searching Authority are transmitted herewith.

3. [ ] **With regard to any protest** against payment of (an) additional fee(s) under Rule 40.2, the applicant is notified that:

   [ ] the protest together with the decision thereon has been transmitted to the International Bureau together with the applicant's request to forward the texts of both the protest and the decision thereon to the designated Offices.

   [ ] no decision has been made yet on the protest; the applicant will be notified as soon as a decision is made.

4. **Reminders**

The applicant may submit comments on an informal basis on the written opinion of the International Searching Authority to the International Bureau. The International Bureau will send a copy of such comments to all designated Offices unless an international preliminary examination report has been or is to be established. Following the expiration of 30 months from the priority date, these comments will also be made available to the public.

Shortly after the expiration of **18 months** from the priority date, the international application will be published by the International Bureau. If the applicant wishes to avoid or postpone publication, a notice of withdrawal of the international application, or of the priority claim, must reach the International Bureau before completion of the technical preparations for international publication (Rules 90*bis*.1 and 90*bis*.3).

Within **19 months** from the priority date, but only in respect of some designated Offices, a demand for international preliminary examination must be filed if the applicant wishes to postpone the entry into the national phase **until 30 months** from the priority date (in some Offices even later); otherwise, the applicant must, **within 20 months** from the priority date, perform the prescribed acts for entry into the national phase before those designated Offices.

In respect of other designated Offices, the time limit of **30 months** (or later) will apply even if no demand is filed within 19 months.

For details about the applicable time limits, Office by Office, see www.wipo.int/pct/en/texts/time_limits.html and the *PCT Applicant's Guide*, National Chapters.

Name and mailing address of the International Searching Authority	Authorized officer
European Patent Office, P.B. 5818 Patentlaan 2 NL-2280 HV Rijswijk Tel. (+31-70) 340-2040 Fax: (+31-70) 340-3016	VANDEPUT, Catherine Tel: +31 (0)70 340-1994

PATENT COOPERATION TREATY

PCT

INTERNATIONAL SEARCH REPORT

(PCT Article 18 and Rules 43 and 44)

Applicant's or agent's file reference	**FOR FURTHER ACTION**	see Form PCT/ISA/220 as well as, where applicable, item 5 below.
11804Q-DW		
International application No.	International filing date *(day/month/year)*	(Earliest) Priority Date *(day/month/year)*
PCT/US2011/044098	15/07/2011	15/07/2010
Applicant		
THE PROCTER & GAMBLE COMPANY		

This international search report has been prepared by this International Searching Authority and is transmitted to the applicant according to Article 18. A copy is being transmitted to the International Bureau.

This international search report consists of a total of 3 sheets.

[X] It is also accompanied by a copy of each prior art document cited in this report.

1. **Basis of the report**

   a. With regard to the **language,** the international search was carried out on the basis of:

   [X] the international application in the language in which it was filed

   [ ] a translation of the international application into _____, which is the language of a translation furnished for the purposes of international search (Rules 12.3(a) and 23.1(b))

   b. [ ] This international search report has been established taking into account the **rectification of an obvious mistake** authorized by or notified to this Authority under Rule 91 (Rule 43.6*bis*(a)).

   c. [ ] With regard to any **nucleotide and/or amino acid sequence** disclosed in the international application, see Box No. I.

2. [ ] **Certain claims were found unsearchable** (See Box No. II)

3. [ ] **Unity of invention is lacking** (see Box No III)

4. With regard to the **title,**

   [X] the text is approved as submitted by the applicant

   [ ] the text has been established by this Authority to read as follows:

5. With regard to the **abstract,**

   [X] the text is approved as submitted by the applicant

   [ ] the text has been established, according to Rule 38.2(b), by this Authority as it appears in Box No. IV. The applicant may, within one month from the date of mailing of this international search report, submit comments to this Authority

6. With regard to the **drawings,**

   a. the figure of the **drawings** to be published with the abstract is Figure No. 1

   [X] as suggested by the applicant

   [ ] as selected by this Authority, because the applicant failed to suggest a figure

   [ ] as selected by this Authority, because this figure better characterizes the invention

   b. [ ] none of the figures is to be published with the abstract

INTERNATIONAL SEARCH REPORT

International application No
PCT/US2011/044098

A. CLASSIFICATION OF SUBJECT MATTER
INV. A61F13/15
ADD.

According to International Patent Classification (IPC) or to both national classification and IPC

B. FIELDS SEARCHED

Minimum documentation searched (classification system followed by classification symbols)
A41H B65H D06F

Documentation searched other than minimum documentation to the extent that such documents are included in the fields searched

Electronic data base consulted during the international search (name of data base and, where practical, search terms used)
EPO-Internal, WPI Data

C. DOCUMENTS CONSIDERED TO BE RELEVANT

Category*	Citation of document, with indication, where appropriate, of the relevant passages	Relevant to claim No.
A	WO 2009/032995 A1 (PROCTER & GAMBLE [US]; BURNS JOHN GLASGOW JR [US]; YAMAMOTO YOICHIRO [) 12 March 2009 (2009-03-12) page 9, line 1 - page 18, line 11; figures 1-8	1
A	WO 2009/083788 A1 (GDM S P A [IT]; PIANTONI MATTEO [IT]; SACCHI DIEGO [IT]; ROSANI MARCO) 9 July 2009 (2009-07-09) page 4, line 1 - page 9, line 27; figures 1-7	1
A	EP 1 726 278 A1 (GDM S P A [IT]) 29 November 2006 (2006-11-29) paragraphs [0014] - [0051]; figures 1-9	1
A	US 2002/103468 A1 (NAKAKADO MASAKI [JP] ET AL) 1 August 2002 (2002-08-01) paragraphs [0050] - [0119]; figures 1-16	1

☐ Further documents are listed in the continuation of Box C.

☒ See patent family annex.

* Special categories of cited documents :

"A" document defining the general state of the art which is not considered to be of particular relevance

"E" earlier document but published on or after the international filing date

"L" document which may throw doubts on priority claim(s) or which is cited to establish the publication date of another citation or other special reason (as specified)

"O" document referring to an oral disclosure, use, exhibition or other means

"P" document published prior to the international filing date but later than the priority date claimed

"T" later document published after the international filing date or priority date and not in conflict with the application but cited to understand the principle or theory underlying the invention

"X" document of particular relevance; the claimed invention cannot be considered novel or cannot be considered to involve an inventive step when the document is taken alone

"Y" document of particular relevance; the claimed invention cannot be considered to involve an inventive step when the document is combined with one or more other such documents, such combination being obvious to a person skilled in the art.

"&" document member of the same patent family

Date of the actual completion of the international search	Date of mailing of the international search report
22 August 2011	30/08/2011

Name and mailing address of the ISA/	Authorized officer
European Patent Office, P.B. 5818 Patentlaan 2 NL - 2280 HV Rijswijk Tel. (+31-70) 340-2040, Fax: (+31-70) 340-3016	Joly, Florence

Form PCT/ISA/210 (second sheet) (April 2005)

INTERNATIONAL SEARCH REPORT

Information on patent family members

International application No
PCT/US2011/044098

Patent document cited in search report	Publication date	Patent family member(s)	Publication date
WO 2009032995 A1	12-03-2009	AT 496601 T	15-02-2011
		EP 2185115 A1	19-05-2010
		EP 2185116 A1	19-05-2010
		US 2009094941 A1	16-04-2009
		US 2009098995 A1	16-04-2009
		US 2011039678 A1	17-02-2011
		WO 2009032999 A1	12-03-2009
WO 2009083788 A1	09-07-2009	CA 2708656 A1	09-07-2009
		CN 101909563 A	08-12-2010
		EP 2227205 A1	15-09-2010
		JP 2011508645 A	17-03-2011
		KR 20100101129 A	16-09-2010
		US 2011003673 A1	06-01-2011
EP 1726278 A1	29-11-2006	AT 383840 T	15-02-2008
		CN 1880059 A	20-12-2006
		DE 602006000449 T2	24-12-2008
		ES 2299150 T3	16-05-2008
		JP 2006326313 A	07-12-2006
		US 2006276320 A1	07-12-2006
US 2002103468 A1	01-08-2002	AT 365694 T	15-07-2007
		AT 517834 T	15-08-2011
		CN 1356097 A	03-07-2002
		DE 60129103 T2	25-10-2007
		EP 1234787 A1	28-08-2002

PATENT COOPERATION TREATY

From the
INTERNATIONAL SEARCHING AUTHORITY

To:

see form PCT/ISA/220

PCT

WRITTEN OPINION OF THE INTERNATIONAL SEARCHING AUTHORITY
(PCT Rule 43*bis*.1)

Date of mailing
(day/month/year) see form PCT/ISA/210 (second sheet)

Applicant's or agent's file reference
see form PCT/ISA/220

FOR FURTHER ACTION
See paragraph 2 below

International application No.	International filing date *(day/month/year)*	Priority date *(day/month/year)*
PCT/US2011/044098	15.07.2011	15.07.2010

International Patent Classification (IPC) or both national classification and IPC
INV. A61F13/15

Applicant
THE PROCTER & GAMBLE COMPANY

1. This opinion contains indications relating to the following items:

- ☒ Box No. I Basis of the opinion
- ☐ Box No. II Priority
- ☐ Box No. III Non-establishment of opinion with regard to novelty, inventive step and industrial applicability
- ☐ Box No. IV Lack of unity of invention
- ☒ Box No. V Reasoned statement under Rule 43*bis*.1(a)(i) with regard to novelty, inventive step and industrial applicability; citations and explanations supporting such statement
- ☐ Box No. VI Certain documents cited
- ☒ Box No. VII Certain defects in the international application
- ☐ Box No. VIII Certain observations on the international application

2. **FURTHER ACTION**

If a demand for international preliminary examination is made, this opinion will usually be considered to be a written opinion of the International Preliminary Examining Authority ("IPEA") except that this does not apply where the applicant chooses an Authority other than this one to be the IPEA and the chosen IPEA has notifed the International Bureau under Rule 66.1*bis*(b) that written opinions of this International Searching Authority will not be so considered.

If this opinion is, as provided above, considered to be a written opinion of the IPEA, the applicant is invited to submit to the IPEA a written reply together, where appropriate, with amendments, before the expiration of 3 months from the date of mailing of Form PCT/ISA/220 or before the expiration of 22 months from the priority date, whichever expires later.

For further options, see Form PCT/ISA/220.

3. For further details, see notes to Form PCT/ISA/220.

Name and mailing address of the ISA:

European Patent Office
P.B. 5818 Patentlaan 2
NL-2280 HV Rijswijk - Pays Bas
Tel. +31 70 340 - 2040
Fax: +31 70 340 - 3016

Date of completion of this opinion
see form PCT/ISA/210

Authorized Officer
Joly, Florence
Telephone No. +31 70 340-3905

WRITTEN OPINION OF THE INTERNATIONAL SEARCHING AUTHORITY

International application No.
PCT/US2011/044098

Box No. I Basis of the opinion

1. With regard to the **language**, this opinion has been established on the basis of:

   ☒ the international application in the language in which it was filed

   ☐ a translation of the international application into , which is the language of a translation furnished for the purposes of international search (Rules 12.3(a) and 23.1 (b)).

2. ☐ This opinion has been established taking into account the **rectification of an obvious mistake** authorized by or notified to this Authority under Rule 91 (Rule 43bis.1(a))

3. With regard to any **nucleotide and/or amino acid sequence** disclosed in the international application, this opinion has been established on the basis of a sequence listing filed or furnished:

   a. (means)

      ☐ on paper

      ☐ in electronic form

   b. (time)

      ☐ in the international application as filed

      ☐ together with the international application in electronic form

      ☐ subsequently to this Authority for the purposes of search

4. ☐ In addition, in the case that more than one version or copy of a sequence listing has been filed or furnished, the required statements that the information in the subsequent or additional copies is identical to that in the application as filed or does not go beyond the application as filed, as appropriate, were furnished.

5. Additional comments:

Box No. V Reasoned statement under Rule 43*bis*.1(a)(i) with regard to novelty, inventive step or industrial applicability; citations and explanations supporting such statement

1. Statement

Novelty (N)	Yes:	Claims	1-13
	No:	Claims	
Inventive step (IS)	Yes:	Claims	1-13
	No:	Claims	
Industrial applicability (IA)	Yes:	Claims	1-13
	No:	Claims	

2. Citations and explanations

   see separate sheet

Box No. VII Certain defects in the international application

The following defects in the form or contents of the international application have been noted:

see separate sheet

Re Item V

Reasoned statement with regard to novelty, inventive step or industrial applicability; citations and explanations supporting such statement

1) Reference is made to the following document(s):

D1 WO 2009/032995 A1 (PROCTER & GAMBLE [US]; BURNS JOHN GLASGOW JR [US]; YAMAMOTO YOICHIRO []) 12 March 2009 (2009-03-12)

D2 US 2002/103468 A1 (NAKAKADO MASAKI [JP] ET AL) 1 August 2002 (2002-08-01)

2) NOVELTY

D1 is regarded as being the closest prior art closest .

D1 discloses (cf D1: page 9, line 1 - page 18, line 11; figures 1-8)

an apparatus for folding articles advancing in a machine direction wherein each article has a leading end and a trailing end, the apparatus comprising:
a rotatable roll comprising a roll surface and an article disposed thereon;
a first vacuum conveyor including a movable surface configured to receive at least a portion of the leading end of the article from the rotating roll, the movable surface of the first vacuum conveyor being driven by a variable speed motor such that the movable surface of the first vacuum conveyor travels at a first speed when the leading end of the article is received by the first vacuum conveyor and then slows down to a second speed; and
a second vacuum conveyor including a movable surface for engaging the leading end of the article and applying a peel force thereto such that at least a portion of the leading end of the article is transferred from the first vacuum conveyor to the second vacuum conveyor, the movable surface of the second vacuum conveyor being driven by a variable speed motor such that after the movable surface of the second vacuum conveyor receives the leading end of the article from the movable surface of the second vacuum conveyor speeds up to the first speed while carrying the leading end of the article back to the rotating roll, the second vacuum conveyor being configured to transfer the leading end back to the rotating roll such that the leading end and the trailing end are arranged in a face-to-face relationship to form a folded article.

The subject-matter of claim 1 therefore differs from D1 in that :

- the roll surface including at least one protrusion and at least one pocket

The subject matter of claim 1 is therefore new (Article 33(2) PCT).

3) INVENTIVE STEP

The problem to be solved by the present invention may be regarded as how to improve the rate of article transport without increasing the size or the rotational speed of the roll.

The solution to this problem proposed in claim 1 of the present application is considered as involving an inventive step (Article 33(3) PCT) for the following reasons:

None of the documents proposed a drum for folding individual articles, wherein the drum comprises pockets and protrusions. D2 (cf D2: paragraphs [0050] - [0119]; figures 1-16) is used for a continuous web, and it would not be obvious for the skilled person to adapt this drum for individual articles (with a leading and a trailing end) and for working with the mechanism of D1.

Claims 2-13 are dependent on claim 1 and as such also meet the requirements of the PCT with respect to novelty and inventive step.

-

Re Item VII

4) Certain defects in the international application

4.1) The paragraph on page 16 lines 27-31 concerning the use of the term "about" is vague and unclear and leaves the reader in doubt as to the meaning of the technical features to which it refers, thereby rendering the definition of the subject-matter of said claim 1-13 unclear, Article 6 PCT and does not respect the international preliminary examination guidelines 5.38 and 5.30.

4.2) The paragraph concerning the expression"which is hereby incorporated by reference" on page 16 line 32-page 17 line 6, violates the requirements of Rule 9.1(iv) PCT.

4.3) The paragraph on page 17 lines 7-11 of the present description does not respect the international preliminary examination guidelines chapter V,5.30, Article 6 PCT.

4.4) Contrary to the requirements of Rule 5.1(a)(ii) PCT, the relevant background art disclosed in D1-D4 is not mentioned in the description, nor are these documents identified therein.

4.5) Independent claim 1 is not in the two-part form in accordance with Rule 6.3(b) PCT, which in the present case would be appropriate, with those features known in combination from the prior art D1 being placed in the preamble (Rule 6.3(b)(i) PCT) and the remaining features being included in the characterising part (Rule 6.3(b)(ii) PCT).

4.6) The features of claims 1-13 are not provided with reference signs placed in parentheses (Rule 6.2(b) PCT).

4.7) All the description concerns the disposable absorbent articles, whereas claim 1 covers all types of articles, leaving claim 1 unclear. Claim 1 should be restricted to disposable absorbent articles . Article 6 PCT.

Possible steps after receipt of the international search report (ISR) and written opinion of the International Searching Authority (WO-ISA)

General information	For all international applications filed on or after 01/01/2004 the competent ISA will establish an ISR. It is accompanied by the WO-ISA. Unlike the former written opinion of the IPEA (Rule 66.2 PCT), the WO-ISA is not meant to be responded to, but to be taken into consideration for further procedural steps. This document explains about the possibilities.
Amending claims under Art. 19 PCT	Within 2 months after the date of mailing of the ISR and the WO-ISA the applicant may file amended claims under Art. 19 PCT directly with the International Bureau of WIPO. The PCT reform of 2004 did not change this procedure. For further information please see Rule 46 PCT as well as form PCT/ISA/220 and the corresponding Notes to form PCT/ISA/220.
Filing a demand for international preliminary examination	In principle, the WO-ISA will be considered as the written opinion of the IPEA. This should, in many cases, make it unnecessary to file a demand for international preliminary examination. If the applicant nevertheless wishes to file a demand this must be done before expiry of 3 months after the date of mailing of the ISR/WO-ISA or 22 months after priority date, whichever expires later (Rule 54bis PCT). Amendments under Art. 34 PCT can be filed with the IPEA as before, normally at the same time as filing the demand (Rule 66.1 (b) PCT). If a demand for international preliminary examination is filed and no comments/amendments have been received the WO-ISA will be transformed by the IPEA into an IPRP (International Preliminary Report on Patentability) which would merely reflect the content of the WO-ISA. The demand can still be withdrawn (Art. 37 PCT).
Filing informal comments	After receipt of the ISR/WO-ISA the applicant may file informal comments on the WO-ISA directly with the International Bureau of WIPO. These will be communicated to the designated Offices together with the IPRP (International Preliminary Report on Patentability) at 30 months from the priority date. Please also refer to the next box.
End of the international phase	At the end of the international phase the International Bureau of WIPO will transform the WO-ISA or, if a demand was filed, the written opinion of the IPEA into the IPRP, which will then be transmitted together with possible informal comments to the designated Offices. The IPRP replaces the former IPER (international preliminary examination report).
Relevant PCT Rules and more information	Rule 43 PCT, Rule 43bis PCT, Rule 44 PCT, Rule 44bis PCT, PCT Newsletter 12/2003, OJ 11/2003, OJ 12/2003

BNSDOCID: <XS_____2007040100K_I_>

CLAIMS - PCT/US2011/044098

1. An apparatus for folding articles advancing in a machine direction wherein each article has a leading end and a trailing end, the apparatus comprising:

a rotatable roll comprising a roll surface and an article disposed thereon, the roll surface including at least one protrusion and at least one pocket;

a first vacuum conveyor including a movable surface configured to receive at least a portion of the leading end of the article from the rotating roll, the movable surface of the first vacuum conveyor being driven by a variable speed motor such that the movable surface of the first vacuum conveyor travels at a first speed when the leading end of the article is received by the first vacuum conveyor and then slows down to a second speed; and

a second vacuum conveyor including a movable surface for engaging the leading end of the article and applying a peel force thereto such that at least a portion of the leading end of the article is transferred from the first vacuum conveyor to the second vacuum conveyor, the movable surface of the second vacuum conveyor being driven by a variable speed motor such that after the movable surface of the second vacuum conveyor receives the leading end of the article from the movable surface of the second vacuum conveyor speeds up to the first speed while carrying the leading end of the article back to the rotating roll, the second vacuum conveyor being configured to transfer the leading end back to the rotating roll such that the leading end and the trailing end are arranged in a face-to-face relationship to form a folded article.

2. The apparatus of claim 1, wherein at least a portion of the leading end of the article is disposed on a protrusion and is travelling at the first speed.

3. The apparatus of claim 1 or claim 2, further comprising a positioning mechanism mechanically coupled to the movable surface of the second conveyor such that a distance between the movable surface of the second conveyor and the movable surface of the first conveyor can be varied.

4. The apparatus of claim 3, wherein the distance between the movable surface of the second conveyor and the movable surface of the first conveyor is varied between 1 mm and 20 cm.

5. The apparatus of claim 3 or claim 4, wherein the positioning mechanism comprises a cam for continuously varying the distance between the movable surface of the second conveyor and the movable surface of the first conveyor.

6. The apparatus of any of claims 3 to 5, wherein the positioning mechanism positions the movable surface of the second conveyor such that it comprises an upstroke and a downstroke, and the second conveyor engages the leading end on the upstroke.

7. The apparatus of any of the preceding claims, wherein the article includes a middle portion of the article disposed between the leading end and the trailing end and at least a portion of the middle portion is disposed within a pocket.

8. The apparatus of any of the preceding claims, wherein the folded article is a bifolded article.

9. The apparatus of any of the preceding claims, wherein vacuum is present at the surface of the roll which is sufficient to hold at least a portion of the article to the surface of the roll when the roll rotates.

10. The apparatus of any of the preceding claims, wherein the article is a disposable absorbent article comprising a first waist region and an opposing second waist region, and wherein at least one of the first and second waist regions include one or more side panels.

11. The apparatus of any of the preceding claims, wherein vacuum is present at the movable surface of the first vacuum conveyor such that a peel force is applied to the first portion of the article when the first portion is proximate to the movable surface of the first vacuum conveyor to transfer the first portion from the surface of the roll to the movable surface of the first conveyor.

12. The apparatus of claim 9, wherein the vacuum pressure at the surface of the roll is removed when the leading end is transferred to the movable surface of the first conveyor.

13. The apparatus of any of the preceding claims, wherein the article is a disposable absorbent article comprising a body-faceable topsheet and a clothing faceable backsheet, and the backsheet is disposed on the surface of the roll.

Claims Correspondence Table
Comparing Claims 1-13 of U.S. Patent Application No. 13/183,486 to Claims 1-13 of PCT/US2011/044098

Claim from 13/183,486	Claim from PCT/US2011/044098	Comments
1. An apparatus for folding articles advancing in a machine direction wherein each article has a leading end and a trailing end, the apparatus comprising: a rotatable roll comprising a roll surface and an article disposed thereon, the roll surface including at least one protrusion and at least one pocket; a first vacuum conveyor including a movable surface configured to receive at least a portion of the leading end of the article from the rotating roll, the movable surface of the first vacuum conveyor being driven by a variable speed motor such that the movable surface of the first vacuum conveyor travels at a first speed when the leading end of the article is received by the first vacuum conveyor and then slows down to a second speed; and a second vacuum conveyor including a movable surface for engaging the leading end of the article and applying a peel force thereto such that at least a portion of the leading	1. An apparatus for folding articles advancing in a machine direction wherein each article has a leading end and a trailing end, the apparatus comprising: a rotatable roll comprising a roll surface and an article disposed thereon, the roll surface including at least one protrusion and at least one pocket; a first vacuum conveyor including a movable surface configured to receive at least a portion of the leading end of the article from the rotating roll, the movable surface of the first vacuum conveyor being driven by a variable speed motor such that the movable surface of the first vacuum conveyor travels at a first speed when the leading end of the article is received by the first vacuum conveyor and then slows down to a second speed; and a second vacuum conveyor including a movable surface for engaging the leading end of the article and applying a peel force thereto such that at least a portion of the leading end of the article is transferred from the first vacuum conveyor to the second vacuum conveyor, the	U.S. Claim 1 sufficiently corresponds to PCT Claim 1.

Claims Correspondence Table
Comparing Claims 1-13 of U.S. Patent Application No. 13/183,486 to Claims 1-13 of PCT/US2011/044098

Claim from 13/183,486	Claim from PCT/US2011/044098	Comments
end of the article is transferred from the first vacuum conveyor to the second vacuum conveyor, the movable surface of the second vacuum conveyor being driven by a variable speed motor such that after the movable surface of the second vacuum conveyor receives the leading end of the article from the movable surface of the second vacuum conveyor speeds up to the first speed while carrying the leading end of the article back to the rotating roll, the second vacuum conveyor being configured to transfer the leading end back to the rotating roll such that the leading end and the trailing end are arranged in a face-to-face relationship to form a folded article.	movable surface of the second vacuum conveyor being driven by a variable speed motor such that after the movable surface of the second vacuum conveyor receives the leading end of the article from the movable surface of the second vacuum conveyor speeds up to the first speed while carrying the leading end of the article back to the rotating roll, the second vacuum conveyor being configured to transfer the leading end back to the rotating roll such that the leading end and the trailing end are arranged in a face-to-face relationship to form a folded article.	
2. The apparatus of claim 1, wherein at least a portion of the leading end of the article is disposed on a protrusion and is travelling at the first speed.	2. The apparatus of claim 1, wherein at least a portion of the leading end of the article is disposed on a protrusion and is travelling at the first speed.	U.S. Claim 2 sufficiently corresponds to PCT Claim 2.

Claims Correspondence Table
Comparing Claims 1-13 of U.S. Patent Application No. 13/183,486 to Claims 1-13 of PCT/US2011/044098

Claim from 13/183,486	Claim from PCT/US2011/044098	Comments
3. The apparatus of claim 1, further comprising a positioning mechanism mechanically coupled to the movable surface of the second conveyor such that a distance between the movable surface of the second conveyor and the movable surface of the first conveyor can be varied.	3. The apparatus of claim 1 or claim 2, further comprising a positioning mechanism mechanically coupled to the movable surface of the second conveyor such that a distance between the movable surface of the second conveyor and the movable surface of the first conveyor can be varied.	U.S. Claim 3 depends only from Claim 1, whereas PCT Claim 3 depends from "any of the preceding claims."
4. The apparatus of claim 3, wherein the distance between the movable surface of the second conveyor and the movable surface of the first conveyor is varied between 1 mm and 20 cm.	4. The apparatus of claim 3, wherein the distance between the movable surface of the second conveyor and the movable surface of the first conveyor is varied between 1 mm and 20 cm.	U.S. Claim 4 sufficiently corresponds to PCT Claim 4.
5. The apparatus of claim 3, wherein the positioning mechanism comprises a cam for continuously varying the distance between the movable surface of the second conveyor and the movable surface of the first conveyor.	5. The apparatus of claim 3 or claim 4, wherein the positioning mechanism comprises a cam for continuously varying the distance between the movable surface of the second conveyor and the movable surface of the first conveyor.	U.S. Claim 5 depends only from Claim 3, whereas PCT Claim 5 depends from "the apparatus of claim 3 or 4."
6. The apparatus of claim 3, wherein the positioning mechanism positions the movable surface of the second conveyor such that it comprises an upstroke and a downstroke, and the	6. The apparatus of any of claims 3 to 5, wherein the positioning mechanism positions the movable surface of the second conveyor such that it comprises an upstroke and a downstroke, and the	U.S. Claim 6 depends only from Claim 3, whereas PCT Claim 6 depends from "any of claims 3 to 5."

Claims Correspondence Table
Comparing Claims 1-13 of U.S. Patent Application No. 13/183,486 to Claims 1-13 of PCT/US2011/044098

Claim from 13/183,486		Claim from PCT/US2011/044098		Comments
	second conveyor engages the leading end on the upstroke.		second conveyor engages the leading end on the upstroke.	
7.	The apparatus of claim 1, wherein the article includes a middle portion of the article disposed between the leading end and the trailing end and at least a portion of the middle portion is disposed within a pocket.	7.	The apparatus of any of the preceding claims, wherein the article includes a middle portion of the article disposed between the leading end and the trailing end and at least a portion of the middle portion is disposed within a pocket.	U.S. Claim 7 depends only from Claim 1, whereas PCT Claim 7 depends from "any of the preceding claims."
8.	The apparatus of claim 1, wherein the folded article is a bifolded article.	8.	The apparatus of any of the preceding claims, wherein the folded article is a bifolded article.	U.S. Claim 8 depends only from Claim 1, whereas PCT Claim 8 depends from "any of the preceding claims."
9.	The apparatus of claim 1, wherein vacuum is present at the surface of the roll which is sufficient to hold at least a portion of the article to the surface of the roll when the roll rotates.	9.	The apparatus of any of the preceding claims, wherein vacuum is present at the surface of the roll which is sufficient to hold at least a portion of the article to the surface of the roll when the roll rotates.	U.S. Claim 9 depends only from Claim 1, whereas PCT Claim 9 depends from "any of the preceding claims."

Claims Correspondence Table
Comparing Claims 1-13 of U.S. Patent Application No. 13/183,486 to Claims 1-13 of PCT/US2011/044098

Claim from 13/183,486	Claim from PCT/US2011/044098	Comments
10. The apparatus of claim 1, wherein the article is a disposable absorbent article comprising a first waist region and an opposing second waist region, and wherein at least one of the first and second waist regions include one or more side panels.	10. The apparatus of any of the preceding claims, wherein the article is a disposable absorbent article comprising a first waist region and an opposing second waist region, and wherein at least one of the first and second waist regions include one or more side panels.	U.S. Claim 10 depends only from Claim 1, whereas PCT Claim 10 depends from "any of the preceding claims."
11. The apparatus of claim 1, wherein vacuum is present at the movable surface of the first vacuum conveyor such that a peel force is applied to the first portion of the article when the first portion is proximate to the movable surface of the first vacuum conveyor to transfer the first portion from the surface of the roll to the movable surface of the first conveyor.	11. The apparatus of any of the preceding claims, wherein vacuum is present at the movable surface of the first vacuum conveyor such that a peel force is applied to the first portion of the article when the first portion is proximate to the movable surface of the first vacuum conveyor to transfer the first portion from the surface of the roll to the movable surface of the first conveyor.	U.S. Claim 11 depends only from Claim 1, whereas PCT Claim 11 depends from "any of the preceding claims."
12. The apparatus of claim 9, wherein the vacuum pressure at the surface of the roll is removed when the leading end is transferred to the movable surface of the first conveyor.	12. The apparatus of claim 9, wherein the vacuum pressure at the surface of the roll is removed when the leading end is transferred to the movable surface of the first conveyor.	U.S. Claim 12 sufficiently corresponds to PCT Claim 12.
13. The apparatus of claim 1,	13. The apparatus of any of the	U.S. Claim 13

Claims Correspondence Table
Comparing Claims 1-13 of U.S. Patent Application No. 13/183,486 to Claims 1-13 of PCT/US2011/044098

Claim from 13/183,486	Claim from PCT/US2011/044098	Comments
wherein the article is a disposable absorbent article comprising a body-faceable topsheet and a clothing faceable backsheet, and the backsheet is disposed on the surface of the roll.	preceding claims, wherein the article is a disposable absorbent article comprising a body-faceable topsheet and a clothing faceable backsheet, and the backsheet is disposed on the surface of the roll.	depends only from Claim 1, whereas PCT Claim 13 depends from "any of the preceding claims."
14-20		U.S. Claims 14-20 were canceled in the Preliminary Amendment filed on November 14, 2011.

UNITED STATES PATENT AND TRADEMARK OFFICE

Commissioner for Patents
United States Patent and Trademark Office
P.O. Box 1450

THE PROCTER & GAMBLE COMPANY
Global Legal Department - IP
Sycamore Building - 4th Floor
299 East Sixth Street
CINCINNATI OH 45202

MAILED
JAN 19 2012
OFFICE OF PETITIONS

In re Application of : DECISION ON REQUEST TO
Yoichiro YAMAMOTO : PARTICIPATE IN PPH PROGRAM
Application No. 13/183,486 : AND PETITION TO MAKE SPECIAL
Filed: July 15, 2011 : UNDER 37 CFR 1.102(a)
Atty. Docket No.: 11804Q :
For: APPARATUS AND METHOD FOR FOLDING ARTICLE

This is a decision on the request to participate in the Patent Prosecution Highway (PPH) program and the petition under 37 CFR 1.102(a), filed November 15, 2011 to make the above-identified application special.

The request is **GRANTED**.

A grantable request to participate in the PCT –PPH program and petition to make special under 37 CFR 1.102(a) require:

(1) the U.S. application must have an eligible relationship to one or more PCT application where the ISA or IPEA are the JPO, EPO, KIPO, IPAU, Russia, Spain, Finland, Austria, or USPTO;

(2) at least one claim in the PCT application has novelty, inventive step, and industrial applicability and must be free of any observations in Box VIII in the latest work product in the international stage or applicant must identify and explain why the claim(s) is/are not subject to the observation in Box VIII;

(3) applicant must submit a copy of the claim(s) from the PCT application(s) that have novelty, inventive step, and industrial applicability along with an English translation thereof and a statement that the English translation is accurate, if the claims are not in the English language;

(4) all the claims in the U.S. application must sufficiently correspond or be amended to sufficiently correspond to the claim(s) that have novelty, inventive step, and industrial applicability in the PCT application(s);

(5) examination of the U.S. application has not begun;

(6) applicant must submit a copy of the latest international work product from the PCT application indicating that the claim(s) have novelty, inventive step, and industrial applicability along with an English translation thereof;

(7) applicant must submit an IDS listing the documents cited by the PCT examiner in the international work product along with copies of documents except U.S. patents or U.S. patent application publications; and

(8) applicant is required to submit a claims correspondence table in English which indicates how all the claims in the U.S. application correspond to the claims indicated as having novelty, inventive step, and industrial applicability in the latest international work product.

The request to participate in the PCT-PPH program and petition comply with the above requirements. Accordingly, the above-identified application has been accorded "special" status.

Telephone inquiries concerning this decision should be directed to Robert DeWitty, Petitions Attorney, Office of Petitions (571-272-8427). All other inquiries concerning the examination or status of the application is accessible in the PAIR system at http://www.uspto.gov/ebc.index.html.

This application will be forwarded to Technology Center Art Unit 3721 for action commensurate with this decision.

Thurman K. Page

David Bucci
Petitions Examiner
Office of Petitions