UNITED STATES PATENT AND TRADEMARK OFFICE

UNITED STATES DEPARTMENT OF COMMERCE
United States Patent and Trademark Office
Address: COMMISSIONER FOR PATENTS
P.O. Box 1450
Alexandria, Virginia 22313-1450
www.uspto.gov

APPLICATION NO.	FILING DATE	FIRST NAMED INVENTOR	ATTORNEY DOCKET NO.	CONFIRMATION NO.
95/001,611	04/26/2011	7,693,608	638,132-001	1188

27189 7590 03/13/2012

PROCOPIO, CORY, HARGREAVES & SAVITCH LLP
525 B STREET
SUITE 2200
SAN DIEGO, CA 92101

EXAMINER	
ART UNIT	PAPER NUMBER

DATE MAILED: 03/13/2012

Please find below and/or attached an Office communication concerning this application or proceeding.

UNITED STATES PATENT AND TRADEMARK OFFICE

Commissioner for Patents
United States Patents and Trademark Office
P.O.Box 1450
Alexandria, VA 22313-1450
www.uspto.gov

DO NOT USE IN PALM PRINTER

THIRD PARTY REQUESTER'S CORRESPONDENCE ADDRESS
O'MELVENY & MYERS LLP
IP & CALENDAR DEPARTMENT LA-13-A7
400 SOUTH HOPE STREET
LOS ANGELES, CA 90071-2899

Date:

MAILED

MAR 1 3 2012

CENTRAL REEXAMINATION UNIT

Transmittal of Communication to Third Party Requester
Inter Partes Reexamination

REEXAMINATION CONTROL NO. : 95001611
PATENT NO. : 7693608
TECHNOLOGY CENTER : 3999
ART UNIT : 3992

Enclosed is a copy of the latest communication from the United States Patent and Trademark Office in the above identified Reexamination proceeding. 37 CFR 1.903.

Prior to the filing of a Notice of Appeal, each time the patent owner responds to this communication, the third party requester of the inter partes reexamination may once file written comments within a period of 30 days from the date of service of the patent owner's response. This 30-day time period is statutory (35 U.S.C. 314(b)(2)), and, as such, it cannot be extended. See also 37 CFR 1.947.

If an ex parte reexamination has been merged with the inter partes reexamination, no responsive submission by any ex parte third party requester is permitted.

All correspondence relating to this inter partes reexamination proceeding should be directed to the Central Reexamination Unit at the mail, FAX, or hand-carry addresses given at the end of the communication enclosed with this transmittal.

UNITED STATES PATENT AND TRADEMARK OFFICE

Commissioner for Patents
United States Patent and Trademark Office
P.O. Box 1450
Alexandria, VA 22313-1450
www.uspto.gov

MAILED

MAR 13 2012

CENTRAL REEXAMINATION UNIT

PROCOPIO, CORY, HARGREAVES & SAVITCH LLP : (For Patent Owner)
525 B STREET :
SUITE 2200 :
SAN DIEGO, CA 92101 :

O'MELVENY & MEYERS LLP : (For Third-Party Requester)
IP&T CALENDAR DEPARTMENT LA-13-A7 :
400 SOUTH HOPE STREET :
LOS ANGELES, CA 90071-2899 :

In re Nasle : DECISION ON
Reexamination Proceeding : PETITION ON ORDER
Control No. 95/001611 : DENYING *INTER PARTES*
Request Deposited: April 26, 2011 : REEXAMINATION
For: U.S. Patent No.7,693,608 :

This is a decision on the petition filed on August 23, 2011 by which Third Party Requester requests review of the Order Denying the Request for reexamination of claims 1-42 of US Patent No 7,693,608 under 37 CFR 1.927. The petition is considered pursuant to 37 CFR 1.181; No fee is required.

The petition is **DENIED** for the reasons set forth below.

REVIEW OF RELEVANT FACTS

1. U.S. Patent No. 7,693,608 ("'608 patent") issued on July 20, 2007 to Adib Nasle.

2. A request for *inter partes* reexamination was filed April 24, 2011 and assigned control no. 95/001,611. The Third Party Requester alleged that substantial question of patentability was raised with respect to claims 1-42 by a number of prior art references.

3. The examiner denied the *inter partes* request in an order mailed July 25, 2011. The basis for the denial was the examiner's determination that the references asserted in the

proposed rejections did not teach "initiating a calibration and synchronization operation to update the virtual system model when a difference between the real-time data output data and the predicted data output exceeds a threshold" as asserted by the requester. As the original examiner allowed the '608 patent to issue because the prior art of record did not teach the limitation quoted above, the examiner determined that no substantial new question of patentability has been raised in the request.

4. The instant petition was timely filed on August 23, 2011 by the Third Party Requester ("Petitioner"). The petition requests *de novo* review of the Request for *Inter Partes* Reexamination to determine whether a Substantial Question of patentability has been raised.

DISCUSSION

Standard of Review

37 CFR § 1.927 provides for the filing of a petition under 37 CFR § 1.181 to review an examiner's determination refusing to order *inter partes* reexamination. The CRU Director's review on petition is *de novo.*

The Legal Standard for Ordering Reexamination

A review of 35 U.S.C. §§ 311 and 312 reveals that, by statute, *inter partes* reexamination of a United States Patent is only authorized when a consideration of prior art consisting of patents or printed publications establishes that a substantial new question of patentability exists with respect to one or more claims of that patent. 35 U.S.C. § 311 requires that a request for *inter partes* reexamination be based upon prior art as set forth in 35 U.S.C. § 301, that is, prior art consisting of patents or printed publications, while 37 CFR 1.915(b)(3) requires that a request for inter partes reexamination include "A statement pointing out each substantial new question of patentability based on the cited patents and printed publications." A substantial question of patentability is raised by a cited patent or printed publication when there is a substantial likelihood that a reasonable examiner would consider the prior art patent or printed publication important in deciding whether or not the claim is patentable. If the prior art patents and printed Publications relied upon in the request raise a substantial question of patentability, then a "substantial new question of patentability" is present, unless the same question of patentability has already been decided by a final court holding of invalidity after all appeals, or by the Office in an earlier examination or in a reexamination of a patent. That is, the requester must "demonstrate that a patent or printed publication that is relied upon in a proposed rejection presents a new, non-cumulative technical teaching that was not previously considered and discussed on the record during the prosecution of the application that resulted in the patent for which reexamination is requested, and during the prosecution of any other prior proceeding involving the patent." MPEP § 2616. If a substantial new question of patentability is found to be raised, an order granting inter partes reexamination of the patent is issued.

Pertinent Prosecution History of the '608 Patent

1. The '608 patent was filed as application number 11/780,764 filed on July 20, 2007 with 42 claims.

2. On November 19, 2009, in an e-mail message to the applicant's attorney, the original examiner alerted the applicant that it appeared to the examiner that the Budhraja reference (US PG Pub. 2005/0033481) can be combined with Meng (US PG Pub. 2003/0200075) to teach the limitations of the independent claims and many dependent claims.

3. On November 23, 2009, the applicant (applicant's attorney) replied to the examiner's e-mail explaining the difference between the calibration and synchronization of the proposed amended claims and what is in the prior art. The applicant explained the difference between Meng and the proposed amended claims as follows:

> "Meng is different in that it is really an artificial intelligence application. Thus, the system starts with a model, which may be referred to as a virtual model, although it is really a different thing. Because it is an artificial intelligence application, the "model" must grow, learn, adopt, etc. Thus, the patent describes a process for adding to the model when new relevant data sets are produced, or acquired, or whatever. This is really not calibration or synchronization."

4. On November 30, 2009, the examiner replied with the following question:

> "Why is this not calibration or synchronization? In my opinion it would be synchronization since the model is being updated to reflect the new data point. My concern is that I would also consider it to be calibration for the same reason - that the model is being updated to better reflect the new data points, IE: being updated for future use based on new data. Can you give a specific example of the difference between calibration and synchronization as the words are being used in the claims?"

5. On November 30, 2009, the applicant replied with the following answer:

> "The difference to me is that in Meng, the model is actually added too[sic] based on the new data. See paragraphs 38-46, where it mentions adding local nets and claim 1, which is directed to the addition of local nets. In the present application, the model isn't added to, but the operating parameters used for each component are adjusted based on the real time data. In my mind adding to the model because it is incomplete, is not the same as **calibrating, i.e., adjusting the operating parameters as mentioned, and synchronizing, i.e., once the operating parameters are adjusted, bringing the outputs of the virtual model in line with the real-time outputs.**" (emphasis added)

6. On December 1, 2009, the examiner e-mailed the following message to the applicant:

> "I will write up the reasons for allowance and get this sent out ASAP. Thank you for working with me on this to get a full understanding of the intended meaning of the claim language."

7. On January 13, 2010, the examiner mailed a Notice of Allowance allowing all 42 claims with an examiner's amendment amending independent claims 28 and 42 to recite additional steps including the step of "initiating a calibration and synchronization operation ..." so that all claims require initiation of calibration and synchronization operation.

Petitioner's Allegation of the Proper Construction of the limitation "calibration and synchronization"

Petitioner alleges that "[t]he first example of an event said in the specification to be included within *calibration and synchronization*" is "adding or subtracting components and adjusting the logic/process between components to the model" allegedly because the specification of the '608 patent states:

> "Model 600 moves on to operation 604 where the virtual system model of the monitored system under management is updated in response to the real-time data. *This may include*, but is not limited to, modifying the simulated data output from the virtual system model, **adjusting the logic/processing parameters utilized by the virtual system** modeling engine to simulate the operation of the monitored system, **adding/subtracting functional elements of the virtual, system model,** etc. It should be understood that any operational parameter of the virtual system modeling engine and/or the virtual system model may be modified by the calibration engine as long as the resulting modifications can be processed and registered by the virtual system modeling engine" (13:61-14:6). (emphasis added by Petitioner).

The passage above teaches that the virtual model may be updated by adjusting the logic/processing parameters utilized by the virtual system or by adding/subtracting functional element of the virtual system model, not that the limitation "calibration and synchronization" encompasses any and all virtual model updates disclosed in the specification. The term "calibration and synchronization" does not appear anywhere in the above passage. Moreover, the passage discloses that the virtual system model updates **may** include adjusting the logic and adding elements, indicating that not all types of updates are required. The meaning of the limitation "calibration and synchronization" intended by the applicant, and accepted by the original examiner, can be easily ascertained from the prosecution history. Calibrating, as used in the claims of the '608 patent, means adjusting the operational parameters of the virtual model components and synchronizing means bringing the output of the virtual model in line with the real-time outputs.

Also, the question of whether the process of adding to the model can be considered "calibration and synchronization" has been addressed during the original prosecution. Thus, the petitioner's allegation does not raise a substantial **new** question of patentability.

Petitioner also alleges that "[t]he second example of an event said in the specification to be included within *calibration and synchronization* is the aging of the system, namely, as system components age, their values change and are updated based on the real-time data" allegedly because the specification of the '608 patent states:

"the virtual system model is also updated with the real-time data such that **the virtual system model "ages" along with the monitored system"** (13:35) and

"[i]t will be understood that **as monitored system 102 ages, or more specifically the components of comprising monitored system 102 age, then the operating parameters, e.g., current and voltages associated with those components will also change.** Thus, the process of **calibrating the virtual model based on the actual operating information provides a mechanism by which the virtual model can be aged along with the monitored system** 102 so that the comparisons being generated by analytic engine 118 are more meaningful" (16:28-36). (emphasis added by Petitioner).

The above passages teach that the process of calibrating the virtual model, based upon the actual operating information, can be used to update the model as the monitored system ages, not that the limitation "calibration and synchronization" encompasses aging of the system as alleged by the petitioner.

References Asserted in the Request

Shohook

The requester alleged that Shokooh's teaching of using simulation to predict values and comparing the predictions to actual data to detect deteriorating equipment or hidden problems teaches the step of "initiating a calibration and synchronization operation" (see Claim Chart CC-A, p. 25). Requester has failed to explain how detecting an aging condition by comparing predicted and actual operational values teaches the step of adjusting the operational parameters of the simulation model so that its output is in line with the real-time outputs of the aging system.

The requester also alleged that Shokooh's teaching of using simulation to provide missing functionalities that can be added or super imposed on the existing monitoring system teaches the step of "initiating a calibration and synchronization operation" without any other explanation (see Claim Chart CC-A, p. 26). Again there is no explanation as to how Shokooh's disclosure teaches the step of adjusting the operational parameters of the simulation model so that its output is in line with the real-time outputs of the system.

OTI 2005 Real-Time Enterprise Solution Brochure

The requester alleged that the following sentence (at page 4) and bullet points (at page 8) in the brochure provide examples of systems that are updated based upon a difference between the virtual model data and the real-world real-time data (see Claim Chart –CC-B):

Maintenance - Real-Time maintenance alerts and assessment of system components insures just-in-time predictive maintenance of critical plant equipment.

- Comparison of measured vs. estimated values
- Data consistency checking
- Bad data and error correction

The requester's allegation is deficient on its face as the allegation does not even address how the step of "initiating a calibration and synchronization operation" is taught by the above disclosure.

OTI Advanced Monitoring and Hsu

The requester also alleged that a statement in OTI Advanced Monitoring that "rule-based comparison of measured vs. estimated value" is performed by the state estimator and Hsu's disclosure at pages 416-417 in combination with the OTI 2005 reference above discloses the "initiating a calibration and synchronization operation" step. As determined by the examiner in the Order Denying Request for *Inter Partes* Reexamination, mailed July 25, 2011 ("Order"), there is no disclosure or suggestion in Hsu that the "virtual model" is updated when a difference between the "real-time data" and "the predicted data" exceeds a threshold as recited in each independent claim of the '608 patent (see Order, p. 16). Although Petitioner disputes the examiner's finding, Petitioner has not explained how Hsu's teaching of determining "consistency of dynamic responses between simulation and real cases" and "modifying system models and parameters" if there is no consistency teaches updating the "virtual system model when a difference between the real-time data output and the predicted data output exceeds a threshold" as recited in the claims. Hsu discloses that computer simulation of the actual contingency cases is performed to verify the accuracy of the mathematical models and that the models and parameters of the power systems are adjusted accordingly (see p. 417, left column, step 2). The mathematical model verification process is performed before the adaptive system of Hsu is trained and put to actual use. Thus, it is more likely that the data from the real cases is historical data, rather than "real-time data." Also, the output of an unverified simulation model cannot be said to be predicted data. Hsu's adaptive Artificial Neural Network (ANN) model is not complete until its mathematical model is verified and the ANN model is trained, tested, and converged. Moreover, the mathematical model verification process disclosed by Hsu does not teach any threshold that is used to trigger an update to the model.

OTI 2003 PSMS Product Description

The requester alleged that the following two statements, at page 9, describing the capabilities of PSMS disclose "aging":

- Trend electrical parameters on power equipment and identify problem conditions.
- Detect trends and inform appropriate personnel for predictive maintenance.

However, page 9 does not disclose any calibration and synchronization operation to update the monitoring system to model the aging system that is being monitored. Requester also points to pages 10 and 11 of PSMS product description document without any explanation as to how these pages disclose the claim limitation. The three pages cited in the Request that allegedly teach the step of "**initiating calibration and synchronization to update the virtual system model when a difference between the real-time data output and the predicted data output exceeds a threshold**" merely disclose certain monitoring capabilities of the product described in the reference.

OTI 2000 Intelligent Energy Management System Brochure

Although the requester cites pages 7-9 and quotes statement from the pages, as with other references discussed above, there is no explanation as to how the cited pages actually teach the step of "initiating calibration and synchronization to update the virtual system model." There is no teaching of any update to the system model in the cited pages.

CONCLUSION

1. Based on a *de novo* review of the record as a whole, the petition is **DENIED.**

2. **All** correspondence relating to this *inter partes* reexamination proceeding should be directed:

By EFS: Registered users may submit via the electronic filing system EFS-Web, at https://efs.uspto.gov/efile/myportal/efs-registered

By Mail to: Mail Stop *Inter Partes* Reexam
Central Reexamination Unit
Commissioner for Patents
United States Patent & Trademark Office
P.O. Box 1450
Alexandria, VA 22313-1450

By FAX to: (571) 273-9900
Central Reexamination Unit

By hand: Customer Service Window
Randolph Building
401 Dulany Street
Alexandria, VA 22314

For EFS-Web transmissions, 37 CFR 1.8(a)(1)(i) (C) and (ii) states that correspondence (except for a request for reexamination and a corrected or replacement request for reexamination) will be considered timely filed if (a) it is transmitted via the Office's electronic filing system in accordance with 37 CFR 1.6(a)(4), and (b) includes a certificate of transmission for each piece of correspondence stating the date of transmission, which is prior to the expiration of the set period of time in the Office action.

3. Telephone inquiries related to this decision should be directed to Alexander Kosowski, at (571) 272-3744, Mark Reinhart, at (571) 272-1611 or Sudhanshu Pathak at (571) 272-5509.

This decision is final and nonappealable. See 37 CFR 1.927. No further communication on this matter will be acknowledged or considered.

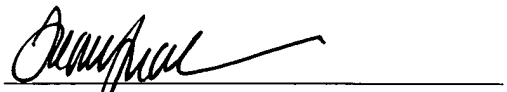

Irem Yucel
Director, Central Reexamination Unit

UNITED STATES PATENT AND TRADEMARK OFFICE

UNITED STATES DEPARTMENT OF COMMERCE
United States Patent and Trademark Office
Address: COMMISSIONER FOR PATENTS
P.O. Box 1450
Alexandria, Virginia 22313-1450
www.uspto.gov

APPLICATION NO.	FILING DATE	FIRST NAMED INVENTOR	ATTORNEY DOCKET NO.	CONFIRMATION NO.
95/001,612	04/28/2011	6,895,389	1042-0010RE	5055

49698 7590 02/22/2012

MICHAUD-Kinney Group LLP
306 INDUSTRIAL PARK ROAD
SUITE 206
MIDDLETOWN, CT 06457

EXAMINER	
ART UNIT	PAPER NUMBER

DATE MAILED: 02/22/2012

Please find below and/or attached an Office communication concerning this application or proceeding.

UNITED STATES PATENT AND TRADEMARK OFFICE

Commissioner for Patents
United States Patents and Trademark Office
P.O.Box 1450
Alexandria, VA 22313-1450
www.uspto.gov

DO NOT USE IN PALM PRINTER

THIRD PARTY REQUESTER'S CORRESPONDENCE ADDRESS

WOLF GREENFIELD & SACKS, P.C.
600 ATLANTIC AVENUE
BOSTON, MA 02210-2206

Date: 2-22-12

Transmittal of Communication to Third Party Requester
Inter Partes Reexamination

REEXAMINATION CONTROL NO. : 95001612
PATENT NO. : 6895389
TECHNOLOGY CENTER : 3999
ART UNIT : 3993

Enclosed is a copy of the latest communication from the United States Patent and Trademark Office in the above identified Reexamination proceeding. 37 CFR 1.903.

Prior to the filing of a Notice of Appeal, each time the patent owner responds to this communication, the third party requester of the inter partes reexamination may once file written comments within a period of 30 days from the date of service of the patent owner's response. This 30-day time period is statutory (35 U.S.C. 314(b)(2)), and, as such, it cannot be extended. See also 37 CFR 1.947.

If an ex parte reexamination has been merged with the inter partes reexamination, no responsive submission by any ex parte third party requester is permitted.

All correspondence relating to this inter partes reexamination proceeding should be directed to the Central Reexamination Unit at the mail, FAX, or hand-carry addresses given at the end of the communication enclosed with this transmittal.

UNITED STATES PATENT AND TRADEMARK OFFICE

Commissioner for Patents
United States Patent and Trademark Office
P.O. Box 1450
Alexandria, VA 22313-1450
www.uspto.gov

MAILED

FEB 22 2012

CENTRAL REEXAMINATION UNIT

Michaud-Kinney Group LLP
306 Industrial Park Road
Suite 206
Middletown, CT 06457

(For Patent Owner)

Wolf, Greenfield, & Sacks, P.C.
600 Atlantic Avenue
Boston, MA 02210 -2206

(For Requester)

In re Fischburg
Inter Partes Reexamination Proceeding
Control No. 95/001,612
Filed: April 28, 2011
For: U.S. Patent No. 6,895,389

: **DECISION**
: **GRANTING**
: **PETITION**

This is a decision on the December 8, 2011 patent owner petition (patent owner's December 8, 2011 petition) requesting withdrawal of the September 21, 2011 patent owner petition entitled "Petition to Prohibit Third Party Requester's Attorneys and Staff from Participating in the *Inter Partes* Reexamination Pursuant to 37 C.F.R. § 1.182" (patent owner's September 21, 2011 petition).

This decision also addresses requester's October 5, 2011 opposition paper entitled "Requester's Opposition to Patent Owner's Petition to Prohibit Requester's Attorneys and Staff from Participating in the *Inter Partes* Reexamination" (requester's October 5, 2011 opposition paper).

Patent owner's December 8, 2011 and September 21, 2011 petitions, requester's October 5, 2011 opposition, and the record as a whole are before the Office of Patent Legal Administration for consideration.

For the reasons set forth below, the September 21, 2011 petition is **dismissed as withdrawn** and has not been considered on the merits. The December 8, 2011 patent owner petition is **granted**.

DECISION

In the December 8, 2011 patent owner petition, the patent owner requested that the Office withdraw from consideration patent owner's September 21, 2011 petition in light of the fact that the court, in *Consumers Interstate Corp. v. Staples Inc. et al*, Case No. 3:06-cv-00173 (AVC) (D. Conn.), has granted a motion for modification of a protective order which renders the petition moot.

The September 21, 2011 petition is hereby **dismissed as withdrawn** and has not been considered on its merits. The December 8, 2011 patent owner petition is **granted**. Because the September 21, 2011 petition is dismissed as withdrawn, requester's October 5, 2011 opposition paper will not be addressed on the merits.

CONCLUSION

- The September 21, 2011 patent owner petition is **dismissed as withdrawn**.
- The December 8, 2011 patent owner petition is **granted**.
- Any inquiry concerning this communication should be directed to Cynthia Nessler, Senior Legal Advisor, at (571) 272-7724.

Brian E. Hanlon
Director
Office of Patent Legal Administration

UNITED STATES PATENT AND TRADEMARK OFFICE

UNITED STATES DEPARTMENT OF COMMERCE
United States Patent and Trademark Office
Address: COMMISSIONER FOR PATENTS
P.O. Box 1450
Alexandria, Virginia 22313-1450
www.uspto.gov

APPLICATION NO.	FILING DATE	FIRST NAMED INVENTOR	ATTORNEY DOCKET NO.	CONFIRMATION NO.
95/001,612	04/28/2011	6,895,389	1042-0010RE	5055

49698 7590 03/01/2012

MICHAUD-Kinney Group LLP
306 INDUSTRIAL PARK ROAD
SUITE 206
MIDDLETOWN, CT 06457

EXAMINER	
ART UNIT	PAPER NUMBER

DATE MAILED: 03/01/2012

Please find below and/or attached an Office communication concerning this application or proceeding.

UNITED STATES PATENT AND TRADEMARK OFFICE

Commissioner for Patents
United States Patents and Trademark Office
P.O.Box 1450
Alexandria, VA 22313-1450
www.uspto.gov

DO NOT USE IN PALM PRINTER

THIRD PARTY REQUESTER'S CORRESPONDENCE ADDRESS

WOLF GREENFIELD & SACKS, P.C.
600 ATLANTIC AVENUE
BOSTON, MA 02210-2206

Date: 3-1-12

Transmittal of Communication to Third Party Requester
Inter Partes Reexamination

REEXAMINATION CONTROL NO. : 95001612
PATENT NO. : 6895389
TECHNOLOGY CENTER : 3999
ART UNIT : 3993

Enclosed is a copy of the latest communication from the United States Patent and Trademark Office in the above identified Reexamination proceeding. 37 CFR 1.903.

Prior to the filing of a Notice of Appeal, each time the patent owner responds to this communication, the third party requester of the inter partes reexamination may once file written comments within a period of 30 days from the date of service of the patent owner's response. This 30-day time period is statutory (35 U.S.C. 314(b)(2)), and, as such, it cannot be extended. See also 37 CFR 1.947.

If an ex parte reexamination has been merged with the inter partes reexamination, no responsive submission by any ex parte third party requester is permitted.

All correspondence relating to this inter partes reexamination proceeding should be directed to the Central Reexamination Unit at the mail, FAX, or hand-carry addresses given at the end of the communication enclosed with this transmittal.

UNITED STATES PATENT AND TRADEMARK OFFICE

Commissioner for Patents
United States Patent and Trademark Office
P.O. Box 1450
Alexandria, VA 22313-1450
www.uspto.gov

MICHAUD-Kinney Group LLP (For Patent Owner)
306 Industrial Park Road
Suite 206
Middletown, CT 06457

Wolf Greenfield & Sacks P.C. (For Third Party Requester)
600 Atlantic Avenue
Boston, MA 02201-2206

MAILED

MAR 01 2012

CENTRAL REEXAMINATION UNIT

In re Fischburg :
Inter partes Reexamination Proceeding : **DECISION**
Control No: 95/001,612 : **DISMISSING PETITIONS**
Filing Date: April 28, 2011 : **AND EXPUNGING**
For: U.S. Patent No.: 6,895,389 : **IMPROPER PAPER**

This decision addresses the following petitions and opposition papers:

- The September 21, 2011 patent owner petition, entitled "Petition for Suspension of *Inter Partes* Reexamination Pursuant to 35 U.S.C. § 314(c) and 37 C.F.R §§ 1.987 and 1.182" (patent owner's September 21, 2011 petition to suspend);

- The September 21, 2011 patent owner petition, entitled "Petition under 37 C.F.R. § 1.182 for OPLA to Take and Retain Jurisdiction of *Inter Partes* Reexamination" (patent owner's September 21, 2011 petition for OPLA to take jurisdiction);

- The October 5, 2011 requester opposition paper, entitled "Requester's Opposition to Patent Owner's Petition for OPLA to Take and Retain Jurisdiction of *Inter Partes* Reexamination" (requester's October 5, 2011 opposition to patent owner's petition for OPLA to take jurisdiction);

- The October 5, 2011 requester opposition paper, entitled "Requester's Opposition to Patent Owner's Petition for Suspension of *Inter Partes* Reexamination" (requester's October 5, 2011 opposition to patent owner's petition to suspend);

- The January 17, 2012 patent owner petition, entitled "Supplement to Petition for Suspension of Inter Partes Reexamination Pursuant to 35 U.S.C. § 314(c) and 37 C.F.R. §§ 1.987 & 1.182" (patent owner's January 17, 2012 supplemental petition to suspend);

- The January 23, 2012 patent owner petition, entitled "Patent Owner's Second Supplement to Petition for Suspension of Inter Partes Reexamination Pursuant to 35 U.S.C. § 314(c) and 37 C.F.R. §§ 1.987 & 1.182" (patent owner's January 23, 2012 second supplemental petition to suspend); and

- The January 31, 2012 requester opposition paper, entitled "Requester's Opposition to Patent Owner's Supplements to Petition for Suspension of *Inter Partes* Reexamination" (requester's January 31, 2012 opposition to patent owner's supplemental petitions to suspend).

The above-listed patent owner petitions filed on September 21, 2011, January 17, 2012, and January 23, 2012, the above-listed requester opposition papers filed on October 5, 2011 and January 31, 2012, and the record as a whole, are before the Office of Patent Legal Administration for consideration.

SUMMARY

Patent owner's September 21, 2011 petition to suspend, January 17, 2012 supplemental petition to suspend, and January 23, 2012 supplemental petition to suspend, are **dismissed**.

Patent owner's September 21, 2011 petition for OPLA to take jurisdiction is **dismissed as moot**.

Requester's October 5, 2011 opposition to patent owner's petition for OPLA to take jurisdiction is an **improper paper**. Because the present paper has been scanned into the electronic Image File Wrapper (IFW), the paper cannot be physically returned to the patent owner. Thus, the present petition paper **is being expunged** from the record by marking the paper "closed" and "non-public," and will not constitute part of the record of the present reexamination proceeding.

DECISION

Patent Owner's September 21, 2011 Petition to Suspend, and January 17 and 23, 2012 Supplemental Petitions to Suspend

The patent owner requests the Office to suspend the present *inter partes* reexamination proceeding.

MPEP 2686.04 provides, in pertinent part (emphasis added):

> [35 U.S.C. 314(c)][1] thus authorizes the Director of the USPTO **to suspend (stay) reexamination proceedings, where there is good cause to do so**, pending the conclusion of litigation based on a potential for termination of a reexamination prosecution under 35 U.S.C. 317(b). Thus, a District Court decision that is pending appeal on the validity of the same claims considered in an *inter partes* reexamination proceeding may provide the requisite statutory "good cause" for suspension, due to the real possibility that the 35 U.S.C. 317(b) estoppel may attach in the near future to bar/terminate the reexamination proceeding.

---

[1] 35 U.S.C. 314(c) provides, in pertinent part (emphasis added):

> **Unless otherwise provided by the Director for good cause**, all *inter partes* reexamination proceedings under this section, including any appeal to the Board of Patent Appeals and Interferences, shall be conducted with special dispatch within the Office.

Factors to be considered in determining whether it is appropriate to suspend action in the reexamination are:

A. Whether the third party requester is a party to the litigation;

B. Whether the claims in suit are identical to the claims under reexamination;

C. Whether the issue(s) raised in the reexamination proceeding are the same issue(s) that were raised or could have been raised by the requester in the litigation;

D. Whether the litigation has advanced to a late enough stage that there is a sufficient probability that a final decision will be adverse to the requester; and

E. Whether there is a concurrent *ex parte* reexamination proceeding for the patent.

The patent owner effectively argues that good cause exists to suspend the present proceeding because the requester, Staples, Inc., is a co-defendant in the copending litigation, *Consumers Interstate Corp. v. Staples, Inc. et al*, Civil Action No. 3:06-cv-00173 (ACV) (D. Conn.). The Office verifies that the requester, Staples, Inc., is a co-defendant in the copending litigation, which satisfies element A.[2]

Office records do not reveal the existence of a co-pending ex parte reexamination proceeding for the '389 patent, which satisfies element E.

Elements B, C, and D, however, have not been shown to have been satisfied.

Regarding element B, the patent owner asserts that the claims at issue in the reexamination are identical to those in the litigation. However, in the present proceeding, claims 1-18 are subject to reexamination. The patent owner states that claims 12 and 16-18 are not at issue in the copending litigation, but "include limitations *similar* to those recited in claims 1-3 [which are at issue in the litigation]" (emphasis added). The issue in determining whether it is appropriate to suspend action in the reexamination, however, is not whether any non-litigated claims contain limitations that are "similar" to the claims in suit, but whether the claims in suit are identical to the claims under reexamination. "Good cause" for suspension pending the conclusion of litigation is based on a potential for the termination of reexamination prosecution under 35 U.S.C. 317(b). See MPEP 2686.04, quoted above. If a claim under reexamination is not the subject of the copending litigation, then the estoppel provisions of 35 U.S.C. 317(b) would not apply to the final outcome of the copending litigation as to that patent claim, because there would be no "final decision that the party has not sustained its burden of proving the invalidity" of the patent claim. Thus, there is no "potential for termination" of this reexamination proceeding as to the non-litigated claims. Thus, the patent owner has not shown that the claims

[2] The patent owner is reminded that the patent owner has the burden of providing a sufficient showing of the above-listed factors, including whether the requester is a co-defendant to the litigation. Merely stating that the requester is a co-defendant in the litigation is insufficient. In the present case, the Office was able to verify patent owner's statement after brief review of the file of the reexamination proceeding. However, if more than a brief review is required to determine the above factors, then the showing of the patent owner will be determined to be insufficient.

at issue in the litigation are identical to the claims in reexamination. In fact, the patent owner appears to admit that the claims are not identical. Thus, item B has not been shown to have been satisfied.

Regarding element C, the patent owner has not provided any evidence to show that the issue(s) raised in the reexamination proceeding are the same issue(s) that were raised or could have been raised by the requester in the litigation . In fact, the patent owner failed to address this element in the September 21, 2011 petition to suspend, and in the January 17 and 23, 2012 supplemental petitions to suspend. In any event, the fact that the claims at issue in the litigation are not identical to the claims under reexamination provides evidence that the issues raised in the reexamination proceeding are not the same issues that were raised or could have been raised in the litigation. For these reasons, element C has not been shown to have been satisfied.

Regarding element D, the patent owner further argues that the proceedings in the district court have reached an advanced stage. However, the patent owner has not shown that an appeal from a judgment by the district court has been filed with the Federal Circuit, and if so, that the appeal has been fully briefed, or in the alternative, that the time for filing an appeal has expired. In fact, the patent owner has presented evidence that a trial date has not yet been set by the district court.[3] For these reasons, the patent owner has not shown that litigation has advanced to a late enough stage that there is a sufficient probability that a final decision will be adverse to the requester. Thus, item D has not been shown to have been satisfied.

See also *Sony Computer Entertainment America, Inc. v. Dudas*, 85 USPQ2d 1594 (E.D. Va. 2006), where the court upheld the Office's determination of "good cause" to suspend two related *inter partes* reexamination proceedings. The facts of the present case are clearly distinguishable from *Sony*. In Sony, the request for *inter partes* reexamination was not filed until after a final judgment in the district court was rendered. In the present case, however, the request for *inter partes* reexamination has been filed well before trial. Reexamination in *Sony* was limited to the claims that were being litigated. In the present case, however, the claims under reexamination differ from those in the copending litigation. Furthermore, in *Sony*, no action on the merits had been issued, while in the present case, prosecution has advanced to an action closing prosecution, after which responsive papers by both parties have already been filed. Also, in *Sony*, an appeal to the Federal Circuit had been filed, and had been fully briefed. Thus, a final decision in *Sony* was on the horizon.[4] In the present case, however, trial has not yet begun. In fact, a trial date has not yet been set. In other words, the patent owner has not shown that a final decision *as to all claims under reexamination* is expected in the near future. Furthermore, the present proceeding has progressed on the merits. And, without a final decision adverse to requester as to all claims under reexamination, no estoppel can attach as to the non-litigated claims to bar the filing of an *inter partes* request for reexamination of those patent claims or to mandate termination of an ordered reexamination proceeding. The fact that estoppel could possibly attach as to some of the claims at some uncertain point in the future, as argued by patent owner, does not provide the requisite showing of good cause for suspension.

---

[3] See exhibit A, which accompanies patent owner's January 23, 2012 supplemental petition to suspend, and which is a court document entitled "Joint Motion to Extend Remaining Deadlines".

[4] A decision is "final" after all appeals, including any appeal to the Federal Circuit, have been exhausted.

The patent owner extensively argues that good cause exists for suspension because the patent owner is prevented, by the district court's protective order, from submitting certain information in the present reexamination proceeding. The patent owner specifically argues that it is prohibited from submitting its own expert report in this reexamination proceeding. The patent owner, however, has not shown that it has requested the court to modify the protective order to allow it to submit confidential information to the Office, as argued by the requester in its January 31, 2012 opposition to patent owner's supplemental petitions to suspend. The patent owner has not explained whether it has attempted to obtain the consent of the requester to redact any information in its own expert report that is subject to the protective order, and to submit such redacted information to the Office. Furthermore, the patent owner has not clearly explained why it believes that it is prevented from filing its own expert's report. Since the patent owner is the party that produced this document, then presumably the patent owner is the designating party that marked the document as subject to the protective order. The protective order appears to only limit the receiving party from divulging the information contained in the document. Patent owner makes no allegation that the subject matter of the expert report has been designated as confidential by the requester, which could possibly restrict patent owner's ability to submit the document to the Office. Therefore, the patent owner has not provided any reason why it cannot submit its own materials, if those materials only include information originating from the patent owner. In addition, even if the subject matter of patent owner's expert report has been designated as confidential by the requester, there was nothing to prevent the patent owner from presenting its own arguments and/or evidence, i.e., evidence originating from the patent owner, and not the requester, in response to the first Office action. The patent owner further argues that the materials under protective order provide evidence of the state of the art at the time of the invention, and the person of ordinary skill in the art. The patent owner, however, has not shown, or even explained, why evidence relating to a person of ordinary skill in the art, i.e., the level of ordinary skill, or, for that matter, the general state of the art at the time of the invention, would not be publicly available, and would be "protected material". In order to rebut a *prima facie* case of obviousness of the patent claims, a patent owner may timely submit its own secondary indicia of nonobviousness in a reexamination proceeding. Thus, the patent owner has not been prevented, in the present reexamination proceeding, from filing arguments and/or alleged evidence, that is not subject to the court's protective order, regarding its opinion of the level of ordinary skill, the general state of the art at the time of the invention, or regarding other secondary indicia of nonobviousness.

Pursuant to 35 U.S.C. § 317(b), *inter partes* reexamination of a patent and litigation as to that patent may continue side-by-side until "a final decision has been entered against a party in a civil action ... that the party has not sustained its burden of proving the invalidity of any patent claim in suit" or until "a final decision in an *inter partes* reexamination proceeding instituted by a third-party requester is favorable to the patentability of any original or proposed amended or new claim of the patent." Patent owner's proposal, however, would provide for a pre-emptive termination, i.e., suspension, of the *inter partes* reexamination in anticipation of the possibility that some information generated by a party in the litigation might have an impact on the patentability of claims. While the statute may allow for suspending a proceeding for "good cause," it does not permit the Office to effectively terminate any reexamination proceeding on the basis of a possibility of information generated by a party in the litigation having an impact. If an *inter partes* reexamination of a patent were to be suspended any time there was litigation as to

that patent (effectively terminating the proceeding until the resolution of the litigation), Congress would have simply said so in the statute. It clearly did not.

The standards of proof and of claim interpretation used by the Office differ from those used by the courts. See *Ethicon v. Quigg,* 849 F.2d 1422, 1428 (Fed. Cir. 1988). As pointed out in *Ethicon,* "the suspension of PTO proceedings ... precludes access to the forum where there is no presumption of validity." *Ethicon,* 849 F.2d at 1427. The logical extension of patent owner's arguments is for the Office to set aside all *inter partes* reexaminations of a patent involved in litigation, where the requester is party to the litigation, the question of obviousness has been raised, and materials have been placed under protective order by the court. This would deprive the requester of its statutory "access to the forum where there is no presumption of validity." It would eviscerate the statutory scheme of *inter partes* reexamination by refraining from carrying out the reexamination in deference to the possibility of a resolution of court proceedings favorable to one of the parties.

The patent owner also presents arguments, in its September 21, 2011 petition, relating to a provision in the court's protective order that prohibits the patent owner's attorneys who viewed the protected material from participating in the present proceeding. As stated in patent owner's January 17, 2012 supplemental petition, however, the court has modified its protective order to permit patent owner's attorneys who viewed the protected material to participate in the present reexamination proceeding, rendering the issue as moot.

The patent owner, on page 7 of the January 17, 2012 supplemental petition, requests, in the alternative, that the Office "terminate" the present proceeding. Any petition requesting termination, however, must be filed as a separate paper, pursuant to 37 CFR 1.4(c). In any event, the Office directs patent owner's attention to the *inter partes* reexamination statute. The patent owner repeatedly states that the requester violated the protective order by permitting an attorney who was allegedly bound by the protective order to file the request. However, the *inter partes* reexamination statute expressly permits *any third party requester, at any time*, file a request for *inter partes* reexamination on the basis of prior art patents and printed publications. See 35 U.S.C. 311(a). Thus, whether the requester violated the protective order in this manner[5] is not relevant to the propriety of the order granting reexamination, or to the subsequent prosecution in this reexamination proceeding, and is also not relevant to whether good cause exists to suspend the present proceeding. Any remedy regarding requester's violation of the court's protective order must be found with the court.

In summary, the patent owner has not provided a showing of good cause to suspend prosecution of the present reexamination proceeding.

Accordingly, the September 21, 2011 patent owner petition to suspend, and the January 17 and 23, 2012 patent owner supplemental petitions to suspend the present *inter partes* reexamination

[5] The patent owner does not allege that materials subject to the protective order have been filed in the present proceeding. The patent owner only alleges that requester permitted an attorney who was subject to the protective order, rather than another member of the same law firm who was not subject to the protective order, to file the request papers.

proceeding are **dismissed**. Pursuant to MPEP 2686.04, the present *inter partes* reexamination proceeding **will continue**, and **will not be suspended**.

Patent Owner's September 21, 2011 Petition Requesting OPLA to Take Jurisdiction

The patent owner requests that the Office of Patent Legal Administration (OPLA) take jurisdiction of the present reexamination proceeding until a decision on the September 21, 2011 petition to suspend, and also on patent owner's September 21, 2011 petition to prohibit third party requester's attorneys and staff from participating in the present reexamination proceeding, have been decided.

Patent owner's request, i.e., that OPLA take jurisdiction until a decision on the petition to suspend has been issued, is moot because a decision on the petition to suspend has now been rendered, and because patent owner's petition to prohibit third party requester's attorneys and staff from participating in the present reexamination proceeding has previously been withdrawn at patent owner's request (see the February 22, 2012 decision).

For the foregoing reasons, the September 21, 2011 petition to transfer jurisdiction is **dismissed as moot**.

Requester's October 5, 2011 Opposition to Patent Owner's September 21, 2011 Petition Requesting OPLA to Take Jurisdiction

Whether OPLA takes jurisdiction of a reexamination proceeding is a purely procedural matter, the outcome of which has no effect on the rights of the requester. For this reason, an opposition to a petition requesting OPLA to take jurisdiction does not have a right of entry, and is an **improper paper**. Because the present petition paper has been scanned into the electronic Image File Wrapper (IFW), the petition paper cannot be physically returned to the sender. Thus, the present paper **is being expunged** from the record by marking the paper "closed" and "non-public," and will not constitute part of the record of the present reexamination proceeding.

CONCLUSION

- The September 21, 2011 patent owner petition to suspend, and the January 17 and 23, 2012 patent owner supplemental petitions to suspend, are **dismissed**.

- The present *inter partes* reexamination proceeding will continue, and **will not be suspended**.

- The September 21, 2011 patent owner petition requesting OPLA to take jurisdiction is **dismissed as moot**.

- Requester's October 5, 2011 opposition to patent owner's September 21, 2011 petition requesting OPLA to take jurisdiction is an **improper paper**. Because the present paper has been scanned into the electronic Image File Wrapper (IFW), the paper cannot be physically returned to the patent owner. Thus, the present paper **is being expunged** from the record by marking the paper "closed" and "non-public", and will not constitute part of the record of the present reexamination proceeding.

- Telephone inquiries related to this decision should be directed to the undersigned at (571) 272-7724.

/Cynthia L. Nessler/
Cynthia L. Nessler
Senior Legal Advisor
Office of Patent Legal Administration

UNITED STATES PATENT AND TRADEMARK OFFICE

UNITED STATES DEPARTMENT OF COMMERCE
United States Patent and Trademark Office
Address: COMMISSIONER FOR PATENTS
P.O. Box 1450
Alexandria, Virginia 22313-1450
www.uspto.gov

APPLICATION NO.	FILING DATE	FIRST NAMED INVENTOR	ATTORNEY DOCKET NO.	CONFIRMATION NO.
95/001,613	05/03/2011	7,217,392	1205100-00731US1	2566

21005 7590 11/18/2011

HAMILTON, BROOK, SMITH & REYNOLDS, P.C.
530 VIRGINIA ROAD
P.O. BOX 9133
CONCORD, MA 01742-9133

EXAMINER	
ART UNIT	PAPER NUMBER

DATE MAILED: 11/18/2011

Please find below and/or attached an Office communication concerning this application or proceeding.

UNITED STATES PATENT AND TRADEMARK OFFICE

Commissioner for Patents
United States Patents and Trademark Office
P.O.Box 1450
Alexandria, VA 22313-1450
www.uspto.gov

DO NOT USE IN PALM PRINTER

THIRD PARTY REQUESTER'S CORRESPONDENCE ADDRESS
WILMERHALE / DC
1875 PENNSYLVANIA AVE., N.W.
WASHINGTON, DC 20006

Date:

MAILED

NOV 18 2011

CENTRAL REEXAMINATION UNIT

Transmittal of Communication to Third Party Requester
Inter Partes Reexamination

REEXAMINATION CONTROL NO. : 95001613
PATENT NO. : 7217392
TECHNOLOGY CENTER : 3999
ART UNIT : 3991

Enclosed is a copy of the latest communication from the United States Patent and Trademark Office in the above identified Reexamination proceeding. 37 CFR 1.903.

Prior to the filing of a Notice of Appeal, each time the patent owner responds to this communication, the third party requester of the inter partes reexamination may once file written comments within a period of 30 days from the date of service of the patent owner's response. This 30-day time period is statutory (35 U.S.C. 314(b)(2)), and, as such, it cannot be extended. See also 37 CFR 1.947.

If an ex parte reexamination has been merged with the inter partes reexamination, no responsive submission by any ex parte third party requester is permitted.

All correspondence relating to this inter partes reexamination proceeding should be directed to the Central Reexamination Unit at the mail, FAX, or hand-carry addresses given at the end of the communication enclosed with this transmittal.

UNITED STATES PATENT AND TRADEMARK OFFICE

UNITED STATES DEPARTMENT OF COMMERCE
United States Patent and Trademark Office
Address: COMMISSIONER FOR PATENTS
P.O. Box 1450
Alexandria, Virginia 22313-1450
www.uspto.gov

APPLICATION NO.	FILING DATE	FIRST NAMED INVENTOR	ATTORNEY DOCKET NO.	CONFIRMATION NO.
95/001,692	07/19/2011	7,217,392	1205100-00731US3	3732

21005 7590 11/18/2011

HAMILTON, BROOK, SMITH & REYNOLDS, P.C.
530 VIRGINIA ROAD
P.O. BOX 9133
CONCORD, MA 01742-9133

EXAMINER	
ART UNIT	PAPER NUMBER

DATE MAILED: 11/18/2011

Please find below and/or attached an Office communication concerning this application or proceeding.

UNITED STATES PATENT AND TRADEMARK OFFICE

Commissioner for Patents
United States Patents and Trademark Office
P.O.Box 1450
Alexandria, VA 22313-1450
www.uspto.gov

DO NOT USE IN PALM PRINTER

THIRD PARTY REQUESTER'S CORRESPONDENCE ADDRESS
DAVID L. CAVANAUGH
WILMER HALE/ DC
1875 PENNSYLVANIA AVE N.W.
WASHINGTON, DC 20003

Date:

MAILED

NOV 18 2011

CENTRAL REEXAMINATION UNIT

Transmittal of Communication to Third Party Requester
Inter Partes Reexamination

REEXAMINATION CONTROL NO. : 95001692
PATENT NO. : 7217392
TECHNOLOGY CENTER : 3999
ART UNIT : 3991

Enclosed is a copy of the latest communication from the United States Patent and Trademark Office in the above identified Reexamination proceeding. 37 CFR 1.903.

Prior to the filing of a Notice of Appeal, each time the patent owner responds to this communication, the third party requester of the inter partes reexamination may once file written comments within a period of 30 days from the date of service of the patent owner's response. This 30-day time period is statutory (35 U.S.C. 314(b)(2)), and, as such, it cannot be extended. See also 37 CFR 1.947.

If an ex parte reexamination has been merged with the inter partes reexamination, no responsive submission by any ex parte third party requester is permitted.

All correspondence relating to this inter partes reexamination proceeding should be directed to the Central Reexamination Unit at the mail, FAX, or hand-carry addresses given at the end of the communication enclosed with this transmittal.

UNITED STATES PATENT AND TRADEMARK OFFICE

Commissioner for Patents
United States Patent and Trademark Office
P.O. Box 1450
Alexandria, VA 22313-1450
www.uspto.gov

MAILED

NOV 18 2011

CENTRAL REEXAMINATION UNIT

Hamilton, Brook, Smith & Reynolds, P.C.
530 Virginia Road
P.O. Box 9133
Concord, Massachusetts 01742-9133

(For Patent Owner)

David L. Cavanaugh
Wilmer Hale/DC
1875 Pennsylvania Ave N.W.
Washington, DC 20006

(For 95/001,613 and
95/001,692 Requester)

In re Bogen et al.
Inter Partes Reexamination Proceeding
Control No.: 95/001,613
Filed: May 3, 2011
For: U.S. Patent No. 7,217,392 B2

In re Bogen et al.
Inter Partes Reexamination Proceeding
Control No.: 95/001,692
Filed: July 19, 2011
For: U.S. Patent No. 7,217,392 B2

DECISION, *SUA SPONTE*, TO MERGE REEXAMINATION PROCEEDINGS

The above-captioned reexamination proceedings are before the Office of Patent Legal Administration for *sua sponte* consideration of whether the proceedings should be merged under 37 CFR 1.989.

BACKGROUND

1. U.S. Patent No. 7,217,392 B2 ("the '392 patent") issued to Bogen et al. on May 15, 2007, with claims 1-8.

2. A request for *inter partes* reexamination of claims 1-8 of the '392 patent was filed on May 3, 2011, by a third party requester, and was assigned control number 95/001,613 ("the '1613 *inter partes* proceeding"). The request identified Leica Biosystems Melbourne Party Ltd. as the real party in interest.

3. A second request for *inter partes* reexamination of claims 1-8 of the '392 patent, assigned control number 95/001,692 ("the '1692 *inter partes* proceeding"), was filed on July 19, 2011, by the same third party requester, identifying Leica Biosystems Melbourne Party Ltd. as the real party in interest.

4. On July 21, 2011, *inter partes* reexamination was ordered for claims 1-8 of the '392 patent in the '1613 *inter partes* proceeding based on the examiner's determination that the May 3, 2011 request raised a substantial new question of patentability affecting these claims. The order was accompanied by a non-final Office action.

5. On September 20, 2011, patent owner submitted a response to the July 21, 2011 non-final action in the '1613 *inter partes* proceeding. The September 20, 2011 patent owner response did not include any amendment to the specification or claims.

6. On September 22, 2011, *inter partes* reexamination was ordered for claims 1-8 of the '392 patent in the '1692 *inter partes* proceeding based on the examiner's determination that the July 19, 2011 request raised a substantial new question of patentability affecting these claims. No Office action on the merits has been issued in the '1692 proceeding.

7. On October 20, 2011, requester filed comments to patent owner's September 20, 2011 response in the '1613 *inter partes* proceeding.

DECISION

I. MERGER OF PROCEEDINGS

Reexamination has been ordered in two proceedings for the same claims of the same patent. Both proceedings are *inter partes* proceedings. Both proceedings are still pending, and have not been terminated. Therefore, consideration of merger pursuant to 37 CFR 1.989 is ripe at this point in time.

37 CFR 1.989 provides:

> (a) If any reexamination is ordered while a prior *inter partes* reexamination proceeding is pending for the same patent and prosecution in the prior *inter partes* reexamination proceeding has not been terminated, a decision may be made to merge the two proceedings or to suspend one of the two proceedings. Where merger is ordered, the merged examination will normally result in the issuance and publication of a single reexamination certificate under § 1.997.

In accordance with 37 CFR 1.989(a), the 95/001,613, and 95/001,692 proceedings are merged. The merged proceeding will be conducted in accordance with the guidelines and requirements that follow.

II. THE SAME CLAIMS MUST BE MAINTAINED IN BOTH PROCEEDINGS

Presently, the claims (and specification) are identical in both files. Patent owner is required to continue to maintain the same claims (and specification) in both files *throughout the merged proceeding.*

III. CONDUCT OF MERGED PROCEEDING

A. Governing regulations for the merged proceeding:

The present decision merges two *inter partes* reexamination proceedings. The merged proceeding is governed by 37 CFR 1.902 through 1.997. Pursuant to 37 CFR 1.989(a), the merged examination will normally result in the issuance and publication of a single reexamination certificate under 37 CFR 1.997.

It is noted that reexamination was ordered for each of claims 1-8 of the '392 patent in each of the '1613 and '1692 proceedings. Accordingly, the examiner will conduct reexamination in the merged proceeding for claims 1-8 of the '392 patent.

B. *Inter partes* Third Party Requester Participation:

1. Comment rights:

Upon merger of proceedings, all *inter partes* requesters can comment pursuant to 35 U.S.C. 314(b)(2).[1] First, an *inter partes* requester's right to comment is contingent upon the patent owner responding to, or commenting on, an Office action. Second, an *inter partes* requester's right to comment is limited to issues raised in either the Office action or the patent owner's response to the action. Finally, the *inter partes* requester's comments must be submitted within 30 days from the date of service of the patent owner's response. No *inter partes* requester has a right to comment on any issue raised outside the confines of the statute, e.g., issues raised in a previous Office action (but not raised in the most recent Office action or response) or the request and comments from another requester. Requester comments must be submitted within the statutory time period of 30 days from date of service of patent owner's response.

2. Appeal Rights:

A discussion of third party requester's appeal rights can be found in section G below.

C. Papers mailed/filed:

All papers mailed by the Office throughout the merged proceeding will take the form of a single action which applies to both proceedings. All papers issued by the Office, or filed by the patent owner and the third party requester(s), will contain the identifying data for both proceedings and will be entered in each reexamination file. All papers filed by the patent owner and the third party requester(s) must consist of a single paper, **filed in duplicate**, each bearing a signature and identifying data for both proceedings, for entry into each file.

---

[1] Each time that the patent owner files a response to an action on the merits from the United States Patent and Trademark Office ("Office"), the third-party requester shall have one opportunity to file written comments addressing issues raised by the action of the Office or the patent owner's response thereto, if those written comments are received by the Office within 30 days after the date of service of the patent owner's response.

All papers filed by the patent owner and the third party requester(s) should be directed:

by Mail to: Attn: Mail Stop "*Inter Partes* Reexam"
Central Reexamination Unit
Commissioner for Patents
P.O. Box 1450
Alexandria, VA 22313-1450

by FAX to: (571) 273-9900
Central Reexamination Unit

by Hand to: Customer Service Window
Attn: Central Reexamination Unit
Randolph Building, Lobby Level
401 Dulany Street
Alexandria, VA 22314

by EFS: Registered users may submit papers via the electronic filing system EFS-Web, at:

https://efs.uspto.gov/efile/myportal/efs-registered

Patent owner and requesters are reminded that every paper filed in the merged proceeding subsequent to this decision must be served on the other parties, and every paper filed must reflect that such paper was served on the other parties, pursuant to 37 CFR 1.903. All papers are to be addressed to the Central Reexamination Unit as provided above.

D. Amendments:

The filing of any amendments to the specification, claims, or drawings must comply with 37 CFR 1.943, which incorporates the provisions of 37 CFR 1.530 and the guidelines of MPEP § 2666.01, which in turn references the guidelines of MPEP § 2250.

37 CFR 1.121 does not apply to amendments in reexamination. Accordingly, clean copies of the amended claims are not required and are not to be submitted; rather amendments are to be presented via markings pursuant to 37 CFR 1.530(f), except that a claim should be canceled by a statement canceling the claim, without presentation of the text of the claim.

Pursuant to 37 CFR 1.530(i), all amendments must be made relative to the patent specification, including the claims, and drawings, which are in effect as of the date of filing the request for reexamination. *Amendments are not to be made relative to previous amendments.* Thus, for all amendments, all words not appearing in the patent are always underlined, and only words being deleted from the patent appear in brackets.

E. Fees:

Where a paper is filed which requires payment of a fee (e.g., extension of time fee, excess claims fee, petition fee, appeal fee, brief fee, oral hearing fee), only a single fee need be paid. For example, only one fee need be paid for patent owner's appellant brief (or that of one of the *inter*

partes reexamination requesters) which may be filed, even though the brief relates to merged multiple proceedings, and copies must be filed (as pointed out above) for each file in the merged proceeding.

F. Citation of Patents and Printed Publications:

Upon return of the present merged proceeding to the examiner, the examiner will review the files to ensure that each file contains identical citations of prior patents and printed publications, and will cite such documents as are necessary as part of the next action in order to place the files in that condition.

G. Appeal Rights and Procedures for *Inter Partes* Reexamination

The *inter partes* reexamination procedures for taking appeal, and for participating in the patent owner's appeal, are explained in MPEP §§ 2674 through 2675 and 2678 through 2683.

With respect to a patent owner's notice of appeal, the appeal must only be taken from the rejection(s) of the claims in the Right of Appeal Notice (RAN) that the *patent owner* proposes to contest, and must identify each claim rejected by examiner that the patent owner intends to contest.

With respect to a third party requester's notice of appeal, the appeal must only be taken from the finding(s) of patentability of claims in the RAN that the *third party requester* proposes to contest. As set forth in MPEP § 2674, the third party requester must identify in the notice of appeal each rejection *that was previously proposed by third party requester* that the third party requester intends to contest and each rejection made and later withdrawn by the examiner that the third party requester intends to contest. It is not sufficient to merely appeal from the allowance of a claim (i.e., the examiner's finding of a claim patentable); the third party requester must identify each previously proposed rejection to be contested.

No new ground of rejection can be proposed by a third party requester appellant, unless such ground was withdrawn by the examiner during the prosecution of the proceeding, and the third party requester has not yet had an opportunity to propose it as a third party requester proposed ground of rejection. See 37 CFR 41.67(c)(1)(vi) as to the proposed rejections that a requester can challenge in the appellant brief.

CONCLUSION

1. *Inter partes* Reexamination Control No. 95/001,613 and *inter partes* Reexamination Control No. 95/001,692 are merged into a single proceeding, to be conducted in accordance with the procedure set forth above.

2. The examiner will issue an Office action for the merged proceeding in due course.

3. Any questions concerning this communication should be directed to Susy Tsang-Foster in the Office of Patent Legal Administration, at (571) 272-7711.

Pinchus M. Laufer
Senior Legal Advisor
Office of Patent Legal Administration

November 16, 2011

UNITED STATES PATENT AND TRADEMARK OFFICE

UNITED STATES DEPARTMENT OF COMMERCE
United States Patent and Trademark Office
Address: COMMISSIONER FOR PATENTS
P.O. Box 1450
Alexandria, Virginia 22313-1450
www.uspto.gov

APPLICATION NO.	FILING DATE	FIRST NAMED INVENTOR	ATTORNEY DOCKET NO.	CONFIRMATION NO.
95/001,613	05/03/2011	7,217,392	1205100-00731US1	2566

21005 7590 01/24/2012

HAMILTON, BROOK, SMITH & REYNOLDS, P.C.
530 VIRGINIA ROAD
P.O. BOX 9133
CONCORD, MA 01742-9133

EXAMINER	
ART UNIT	PAPER NUMBER

DATE MAILED: 01/24/2012

Please find below and/or attached an Office communication concerning this application or proceeding.

UNITED STATES PATENT AND TRADEMARK OFFICE

Commissioner for Patents
United States Patents and Trademark Office
P.O.Box 1450
Alexandria, VA 22313-1450
www.uspto.gov

DO NOT USE IN PALM PRINTER

THIRD PARTY REQUESTER'S CORRESPONDENCE ADDRESS

DAVID L. CAVANAUGH
WILMER HALE / DC
1875 PENNSYLVANIA AVE., N.W.
WASHINGTON, DC 20006

Date:

MAILED

JAN 24 2012

CENTRAL REEXAMINATION UNIT

Transmittal of Communication to Third Party Requester
Inter Partes Reexamination

REEXAMINATION CONTROL NO. : 95001613
PATENT NO. : 7217392
TECHNOLOGY CENTER : 3999
ART UNIT : 3991

Enclosed is a copy of the latest communication from the United States Patent and Trademark Office in the above identified Reexamination proceeding. 37 CFR 1.903.

Prior to the filing of a Notice of Appeal, each time the patent owner responds to this communication, the third party requester of the inter partes reexamination may once file written comments within a period of 30 days from the date of service of the patent owner's response. This 30-day time period is statutory (35 U.S.C. 314(b)(2)), and, as such, it cannot be extended. See also 37 CFR 1.947.

If an ex parte reexamination has been merged with the inter partes reexamination, no responsive submission by any ex parte third party requester is permitted.

All correspondence relating to this inter partes reexamination proceeding should be directed to the Central Reexamination Unit at the mail, FAX, or hand-carry addresses given at the end of the communication enclosed with this transmittal.

UNITED STATES PATENT AND TRADEMARK OFFICE

Commissioner for Patents
United States Patent and Trademark Office
P.O. Box 1450
Alexandria, VA 22313-1450
www.uspto.gov

MAILED

JAN 24 2012

CENTRAL REEXAMINATION UNIT

Hamilton, Brook, Smith, Reynolds, P.C.
530 Virginia Road
P.O. Box 9133
Concord, MA 01742-9133

: FOR PATENT OWNER

Wilmer, Cutler, Pickering, Hale and Dorr, LLP
1875 Pennsylvania Avenue, N.W.
Washington, D.C., 20006

: FOR THIRD PARTY REQUESTER

In re Bogen et al.
Reexamination Proceeding
Control No. : 95/001,613
Filed: May 3, 2011
Patent No. 7,217,392

: **DECISION ON PETITION**

This is a decision addressing third party requester's opposition, filed October 20, 2011, to patent owner's petition for correction of inventorship pursuant to 37 CFR 1.530(l)(1) and 37 CFR 1.324, filed September 20, 2011.

The opposition is before the Group Director overseeing the Central Reexamination Unit for decision.

SUMMARY

Third party requester's petition is DISMISSED as untimely for the reasons set forth below, without consideration of the merits.

Brief Statement of Relevant Facts

1. Patent No. 7,217,392 (the '392 patent) issued on May 15, 2007.
2. A request for *inter partes* reexamination, assigned Control No. 95/001,613 (the '613 proceeding), was filed by third party requester on May 3, 2011.

3. Reexamination was ordered in the '613 reexamination proceeding on July 21, 2011 and a non-final Office action was mailed on even date.

4. Patent owner filed a response to the non-final Office action on September 20, 2011. Accompanying the response was the petition for correction of inventorship pursuant to 37 CFR 1.530(I)(1) and 37 CFR 1.324.

5. Third party requester filed a response to patent owner's response on October 20, 2011.

6. Also on October 20, 2011, third party requester filed the instant opposition to patent owner's petition for correction of inventorship pursuant to 37 CFR 1.530(l)(1) and 37 CFR 1.

Discussion

Third party requester presents an opposition, filed October 20, 2011, to patent owner's petition for correction of inventorship pursuant to 37 CFR 1.530(l)(1) and 37 CFR 1.324, filed September 20, 2011. Third party requester argues that the petition to remove an inventor, Mr. John Purbrick, stems from a strategy to remove a reference used by the Examiner in rejecting claims in the instant reexamination, that the petition does not address basic facts about inventorship and ignores Mr. Purbrick's contributions to the claims invention and is contradicted by a publication by named inventor Steven Bogen that confirms Mr. Purbrick's inventive contribution.

The opposition is dismissed as untimely.

Statement of Relevant Authority

MPEP § 2667(II)(B)(3) states:

> Thus, for example, in instances where there is a right to file an opposition to a Petition, any such opposition must be filed within two weeks of the date upon which a copy of the original petition was served on the opposing party, to ensure consideration. Any such opposition that is filed after the two-week period will remain in the record, even though it is not considered.

Decision

Third party requester brings before the Office an opposition, filed October 20, 2011, to patent owner's petition for correction of inventorship pursuant to 37 CFR 1.530(l)(1) and 37 CFR 1.324, filed September 20, 2011. Accompanying patent owner's September 20, 2011 petition is a certificate of service, indicating that the petition to correct inventorship was served on third party requester by U.S. Mail on September 20, 2011. Thus, third party requester's opposition was filed more than two weeks after service on the third party requester of the patent owner's petition to correct inventorship. As quoted above, MPEP § 2667(II)(B)(3) requires that oppositions to petitions be filed within **two weeks** from the date of service of a copy of the original petition on the opposing party.

Therefore, the petition is dismissed as untimely because it was not filed within the two week time period required by MPEP § 2667(II)(B)(3).

CONCLUSION

1. Third party requester's opposition, filed October 20, 2011, to patent owner's petition for correction of inventorship pursuant to 37 CFR 1.530(l)(1) and 37 CFR 1.324, filed September 20, 2011, is **dismissed** as untimely for the reasons discussed above.

2. The present *inter parte* reexamination proceeding is being forwarded to the examiner for further consideration on the merits.

3. Telephone inquiries related to this decision should be directed to Andres Kashnikow, Supervisory Patent Examiner, at (571) 272-4361.

Irem Yucel, Director
Central Reexamination Unit

UNITED STATES PATENT AND TRADEMARK OFFICE

UNITED STATES DEPARTMENT OF COMMERCE
United States Patent and Trademark Office
Address: COMMISSIONER FOR PATENTS
P.O. Box 1450
Alexandria, Virginia 22313-1450
www.uspto.gov

APPLICATION NO.	FILING DATE	FIRST NAMED INVENTOR	ATTORNEY DOCKET NO.	CONFIRMATION NO.
95/001,613	05/03/2011	7,217,392	1205100-00731US1	2566

21005 7590 01/24/2012

HAMILTON, BROOK, SMITH & REYNOLDS, P.C.
530 VIRGINIA ROAD
P.O. BOX 9133
CONCORD, MA 01742-9133

EXAMINER	
ART UNIT	PAPER NUMBER

DATE MAILED: 01/24/2012

Please find below and/or attached an Office communication concerning this application or proceeding.

UNITED STATES PATENT AND TRADEMARK OFFICE

Commissioner for Patents
United States Patents and Trademark Office
P.O.Box 1450
Alexandria, VA 22313-1450
www.uspto.gov

DO NOT USE IN PALM PRINTER

THIRD PARTY REQUESTER'S CORRESPONDENCE ADDRESS

DAVID L. CAVANAUGH
WILMER HALE / DC
1875 PENNSYLVANIA AVE., N.W.
WASHINGTON, DC 20006

Date:

MAILED

JAN 24 2012

CENTRAL REEXAMINATION UNIT

Transmittal of Communication to Third Party Requester
Inter Partes Reexamination

REEXAMINATION CONTROL NO. : 95001613
PATENT NO. : 7217392
TECHNOLOGY CENTER : 3999
ART UNIT : 3991

Enclosed is a copy of the latest communication from the United States Patent and Trademark Office in the above identified Reexamination proceeding. 37 CFR 1.903.

Prior to the filing of a Notice of Appeal, each time the patent owner responds to this communication, the third party requester of the inter partes reexamination may once file written comments within a period of 30 days from the date of service of the patent owner's response. This 30-day time period is statutory (35 U.S.C. 314(b)(2)), and, as such, it cannot be extended. See also 37 CFR 1.947.

If an ex parte reexamination has been merged with the inter partes reexamination, no responsive submission by any ex parte third party requester is permitted.

All correspondence relating to this inter partes reexamination proceeding should be directed to the Central Reexamination Unit at the mail, FAX, or hand-carry addresses given at the end of the communication enclosed with this transmittal.

UNITED STATES PATENT AND TRADEMARK OFFICE

Commissioner for Patents
United States Patent and Trademark Office
P.O. Box 1450
Alexandria, VA 22313-1450
www.uspto.gov

MAILED

JAN 24 2012

CENTRAL REEXAMINATION UNIT

Hamilton, Brook, Smith, Reynolds, P.C.
530 Virginia Road
P.O. Box 9133
Concord, MA 01742-9133

: FOR PATENT OWNER

Wilmer, Cutler, Pickering, Hale and Dorr, LLP
1875 Pennsylvania Avenue, N.W.
Washington, D.C., 20006

: FOR THIRD PARTY REQUESTER

In re Bogen et al.
Reexamination Proceeding
Control No. : 95/001,613
Filed: May 3, 2011
Patent No. 7,217,392

: **DECISION ON PETITION**

This is a decision addressing Patent Owner's petition, filed November 30, 2011, under 37 CFR 1.182 to strike portions of requester's comments. This petition is being treated as a petition filed under 37 CFR 1.181 requesting supervisory review.

The petition is before the Group Director overseeing the Central Reexamination Unit for decision.

SUMMARY

Patent owner's petition is DISMISSED as premature for the reasons set forth below, without consideration of the merits.

Brief Statement of Relevant Facts

1. Patent No. 7,217,392 (the '392 patent) issued on May 15, 2007.

2. A request for *inter partes* reexamination, assigned Control No. 95/001,613 (the '613 proceeding), was filed by third party requester on May 3, 2011.

3. Reexamination was ordered in the '613 reexamination proceeding on July 21, 2011 and a non-final Office action was mailed on even date.

4. Patent owner filed a response to the non-final Office action on September 20, 2011. Accompanying the response was the petition for correction of inventorship pursuant to 37 CFR 1.530(I)(1) and 37 CFR 1.324.

5. Third party requester filed a response to patent owner's response on October 20, 2011.

6. On November 30, 2011, patent owner filed the instant petition under 37 CFR 1.182 to strike portions of requester's comments (filed with the October 20, 2011 response).

Discussion

Patent owner requests the Office to strike portions of third party requester's October 20, 2011 submission relating to comments regarding a Board of Patent Appeals and Interferences decision in an unrelated patent application.

The request to review the comments filed with third party requester's October 20, 2011 submission is dismissed as premature.

Statement of Relevant Authority

37 CFR 1.181(f) states:

> The mere filing of a petition will not stay any period for reply that may be running against the application, nor act as a stay of other proceedings. Any petition under this part not filed within **two months** of the mailing date of the action or notice from which relief is requested may be dismissed as untimely, except as otherwise provided. **This two-month period is not extendable**. (Emphasis added.)

...

Decision

Patent owner brings before the Office a petition under 37 CFR § 1.181 to strike portions of third party requester's October 20, 2011 submission relating to comments regarding a Board of Patent Appeals and Interferences decision in an unrelated patent application. Patent owner filed the petition on November 30, 2011. However, there has been no decision by the examiner to either enter or not enter third party requester's submission of October 20, 2011. Accordingly, it is premature to invoke supervisory authority regarding entry or striking of third party requester's comments, because the examiner has not made his or her decision. Thus, the present petition is premature, and it is dismissed.

Conclusion

1. The petition dated November 30, 2011 is dismissed as premature.

2. Telephone inquiries with regard to this decision should be directed to Andres Kashnikow, Supervisory Patent Examiner in the Central Reexamination Unit, Art Unit 3993, at (571) 272-4361.

Irem Yucel, Director
Central Reexamination Unit

UNITED STATES PATENT AND TRADEMARK OFFICE

Commissioner for Patents
United States Patent and Trademark Office
P.O. Box 1450
Alexandria, VA 22313-1450
www.uspto.gov

Hamilton, Brook, Smith, Reynolds, P.C.
530 Virginia Road
P.O. Box 9133
Concord, MA 01742-9133

: FOR PATENT OWNER

MAILED

APR 16 2012

CENTRAL REEXAMINATION UNIT

Wilmer, Cutler, Pickering, Hale and Dorr, LLP
1875 Pennsylvania Avenue, N.W.
Washington, D.C., 20006

: FOR THIRD PARTY REQUESTER

In re Bogen et al.
Reexamination Proceeding
Control No. : 95/001,613
Filed: May 3, 2011
Patent No. 7,217,392

In re Bogen et al.
Reexamination Proceeding
Control No. : 95/001,692
Filed: July 19, 2011
Patent No. 7,217,392

: **DECISION ON PETITION**

This is a decision addressing patent owner's petition under 37 CFR § 1.945, filed November 30, 2011, to amend drawings. This is also a decision on third party requester's opposition petition, filed December 20, 2011, in response to patent owner's November 30, 2011 petition.

The petition is before the Group Director of the Central Reexamination Unit for decision.

SUMMARY

Both patent owner's petition and third party requester's opposition petition are DISMISSED as unnecessary for the reasons set forth below, without consideration of the merits.

Brief Statement of Relevant Facts

1. Patent No. 7,217,392 (the '392 patent) issued on May 15, 2007.

2. A request for *inter partes* reexamination, assigned Control No. 95/001,613 (the '613 proceeding), was filed by third party requester on May 3, 2011.

3. A second request for *inter partes* reexamination, assigned Control No. 95/001,692 (the '692 proceeding), was filed by third party requester on July 19, 2011.

4. Reexamination was ordered in the '613 reexamination proceeding on July 21, 2011 and a non-final Office action was mailed on even date.

5. Reexamination was ordered in the '692 reexamination proceeding on September 22, 2011.

6. Patent owner filed a response to the non-final Office action in the '613 proceeding on September 20, 2011. Accompanying the response was the petition for correction of inventorship pursuant to 37 CFR 1.530(I)(1) and 37 CFR 1.324.

7. In the '613 proceeding, third party requester filed a response to patent owner's response on October 20, 2011.

8. On November 18, 2011, a decision merging the '613 proceeding with reexamination Control No. 95/001,692 was mailed.

9. On November 30, 2011, patent owner filed the instant petition under 37 CFR § 1.945 to amend drawings.

10. On December 20, 2011, third party requester filed the instant opposition petition to patent owner's petition of November 30, 2011 under 37 CFR § 1.945.

Discussion

Patent owner presents a petition under 37 CFR § 1.945, filed November 30, 2011, to amend the drawings. Patent owner states that the drawings amendment is submitted to correct an unintentional drafting error in Figures 14A and 14B of the '392 patent. Third party requester presents an opposition petition to patent owner's petition under 37 CFR § 1.945, filed December 20, 2011. Third party requester argues that the patent owner seeks to change the patent itself and not any error in a paper responsive to and Office action, that there is no reason why the error could not have been corrected earlier and that there is no compelling reason why the drawings should be changed.

The petition is dismissed as unnecessary.

Statement of Relevant Authority

37 CFR § 1.945(b) states:

> Any supplemental response to the Office action will be entered only where the supplemental response it accompanied by a showing of sufficient cause why the supplemental response should be entered. The showing of sufficient cause must include:
>
> (1) an explanation of how the requirements of § 1.111(a)(2)(i) are satisfied;
>
> (2) an explanation of why the supplemental response was not presented together with the original response to the Office action; and
>
> (3) a compelling reason to enter the supplemental response.

Decision

Patent owner brings before the Office a petition under 37 CFR § 1.945, filed November 30, 2011, to amend drawings. 37 CFR § 1.945 clearly sets forth the requirements for entry of a supplemental response to an Office action. These requirements do not include the obligation to file a petition. Supplemental responses are considered by the examiner according to the requirements of 37 CFR § 1.945. A petition is therefore not required.

Therefore, the petition is dismissed as unnecessary. As the third party requester's opposition petition goes to the same issues, it is likewise dismissed as unnecessary.

CONCLUSION

1. Patent owner's petition under 37 CFR § 1.945, filed November 30, 2011 and third party requester's opposition petition to patent owner's petition under 37 CFR § 1.945, filed December 20, 2011, are **dismissed** as unnecessary for the reasons discussed above.

2. The present *inter parte* reexamination proceeding is being forwarded to the examiner for further consideration on the merits.

3. Telephone inquiries related to this decision should be directed to Andres Kashnikow, Supervisory Patent Examiner, at (571) 272-4361.

Irem Yucel, Director
Central Reexamination Unit

UNITED STATES PATENT AND TRADEMARK OFFICE

Commissioner for Patents
United States Patent and Trademark Office
P.O. Box 1450
Alexandria, VA 22313-1450
www.uspto.gov

Hamilton, Brook, Smith, Reynolds, P.C.
530 Virginia Road
P.O. Box 9133
Concord, MA 01742-9133

: FOR PATENT OWNER

MAILED

APR 16 2012

CENTRAL REEXAMINATION UNIT

Wilmer, Cutler, Pickering, Hale and Dorr, LLP
1875 Pennsylvania Avenue, N.W.
Washington, D.C., 20006

: FOR THIRD PARTY REQUESTER

In re Bogen et al.
Reexamination Proceeding
Control No. : 95/001,613
Filed: May 3, 2011
Patent No. 7,217,392

In re Bogen et al.
Reexamination Proceeding
Control No. : 95/001,692
Filed: July 19, 2011
Patent No. 7,217,392

: AMENDED DECISION ON PETITIONS

This is an amended decision addressing patent owner's petition, filed November 30, 2011, under 37 CFR 1.182 to strike portions of requester's comments. This petition is being treated as a petition filed under 37 CFR 1.181 requesting supervisory review. This is also a decision on third party requester's opposition petition, filed December 20, 2011, in response to patent owner's November 30, 2011 petition.

In a decision mailed January 24, 2012, only patent owner's petition filed November 30, 2011 was addressed. Third party requester's opposition petition filed December 20, 2011 was not addressed. Further, the decision of January 24, 2012 was directed only to the file of reexamination proceeding control No. 95/001,613 rather than to proceeding control No. 95/001,613 and 95/001,692, which proceedings are merged per decision mailed November 18, 2011.

The petition is before the Group Director of the Central Reexamination Unit for decision.

SUMMARY

Patent owner's petition and third party requester's petition are DISMISSED as premature for the reasons set forth below, without consideration of the merits.

Brief Statement of Relevant Facts

1. Patent No. 7,217,392 (the '392 patent) issued on May 15, 2007.

2. A request for *inter partes* reexamination, assigned Control No. 95/001,613 (the '613 proceeding), was filed by third party requester on May 3, 2011.

3. A second request for *inter partes* reexamination, assigned Control No. 95/001,692 (the '692 proceeding), was filed by third party requester on July 19, 2011.

4. Reexamination was ordered in the '613 reexamination proceeding on July 21, 2011 and a non-final Office action was mailed on even date.

5. Reexamination was ordered in the '692 reexamination proceeding on September 22, 2011.

6. Patent owner filed a response to the non-final Office action on September 20, 2011. Accompanying the response was the petition for correction of inventorship pursuant to 37 CFR 1.530(I)(1) and 37 CFR 1.324.

7. In the '613 proceeding, third party requester filed a response to patent owner's response on October 20, 2011.

8. On November 18, 2011, a decision merging the '613 proceeding with the '692 proceeding was mailed.

9. On November 30, 2011, patent owner filed the instant petition under 37 CFR 1.182 to strike portions of requester's comments (filed with the October 20, 2011 response).

10. On December 20, 2011, third party requester filed the instant opposition petition to patent owner's petition under 37 CFR 1.182.

DISCUSSION

Patent owner requests the Office to strike portions of third party requester's October 20, 2011 submission relating to comments regarding a Board of Patent Appeals and Interferences (BPAI) decision in an unrelated patent application. Third party requester argues that the BPAI decision responds directly to issues raised by the patent owner in

the response and should not be excluded. Third party requester also argues that the obviousness issue decided in the BPAI decision is essentially the same as the obviousness issues raised in the '613 and the '692 proceedings.

The request to review the comments filed with third party requester's October 20, 2011 submission is dismissed as premature.

Statement of Relevant Authority

37 CFR 1.181(f) states:

> The mere filing of a petition will not stay any period for reply that may be running against the application, nor act as a stay of other proceedings. Any petition under this part not filed within **two months** of the mailing date of the action or notice from which relief is requested may be dismissed as untimely, except as otherwise provided. **This two-month period is not extendable.** (Emphasis added.)

DECISION

Patent owner brings before the Office a petition under 37 CFR § 1.181 to strike portions of third party requester's October 20, 2011 submission relating to comments regarding a BPAI decision in an unrelated patent application. Patent owner filed the petition on November 30, 2011 and third party requester filed the opposition petition on December 20, 2011. However, there has been no decision by the examiner to either enter or not enter third party requester's submission of October 20, 2011. Accordingly, it is premature to invoke supervisory authority regarding entry or striking of third party requester's comments, because the examiner has not made his or her decision. Thus, the present petitions are premature, and they are dismissed.

CONCLUSION

1. Patent owner's petition dated November 30, 2011 and third party requester's opposition petition are dismissed as premature.

2. Telephone inquiries with regard to this decision should be directed to Andres Kashnikow, Supervisory Patent Examiner in the Central Reexamination Unit, Art Unit 3993, at (571) 272-4361.

Irem Yucel, Director
Central Reexamination Unit

UNITED STATES PATENT AND TRADEMARK OFFICE

Commissioner for Patents
United States Patent and Trademark Office
P.O. Box 1450
Alexandria, VA 22313-1450
www.uspto.gov

MAILED

APR 16 2012

CENTRAL REEXAMINATION UNIT

Hamilton, Brook, Smith, Reynolds, P.C.
530 Virginia Road
P.O. Box 9133
Concord, MA 01742-9133

For Patent Owner

Wilmer, Cutler, Pickering, Hale and Dorr, LLP
1875 Pennsylvania, Avenue, N.W.
Washington, DC 20006

For 3rd Party Requester

Inter Partes Reexamination Proceeding
Control No. 95/001,613
Filed: May 3, 2011
For: US Patent No. 7,217,392

Inter Partes Reexamination Proceeding
Control No. 95/001,692
Filed: July 19, 2011
For: US Patent No. 7,217,392

DECISION ON
PETITION TO
CORRECT INVENTORSHIP
[37 CFR 1.324]

This is a decision on the petition filed September 20, 2011, to correct inventorship under 37 CFR 1.324 in US Patent No. 7,217,392, the patent that is subject to the instant reexamination proceeding. The petition seeks to remove John A. Purbrick as a listed inventor.

The petition is **granted** for the reasons set forth below.

Decision

37 CFR 1.324 states, in part:

> (a) Whenever through error a person is named in an issued patent as the inventor, or through error an inventor is not named in an issued patent and such error arose without any deceptive intention on his or her part, the Director, pursuant to 35 U.S.C. 256, may, on application of all parties and assignees,...issue a certificate naming only the actual inventor or inventors...

(b) Any request to correct inventorship of a patent pursuant to paragraph (a) of this section must be accompanied by:

(1) Where one or more persons are being added, a statement from each person who is being added as an inventor that the inventorship arose without any deceptive intention on his or her part;

(2) A statement from the current named inventors who have not submitted a statement under paragraph (b)(1) of this section either agreeing to the change of inventorship or stating that they have no disagreement in regard to the requested change;

(3) A statement from all assignees of the parties submitting a statement under paragraphs (b)(1) and (b)(2) of this section agreeing to the change of inventorship in the patent, which statement must comply with the requirements of § 3.73(b) of this chapter; and

(4) The fee set forth in § 1.2-0(b)."

The submitted petition includes items (2)-(3) required by 37 CFR 1.324. That is, the petition includes a statement from the current named inventors, Steven A. Bogen, Herbert H. Loeffler, and John A. Purbrick, as well as a statement from the current assignee, Dako Denmark A/S agreeing to the change of inventorship, namely, the removal of John A. Purbrick from the list of current named inventors.

The petition fee that is required by 37 CFR 1.20(b) was also received.

In view of the above, the request to correct inventorship in US Patent No. 7,229,436 is **granted**, and John A. Purbrick will be removed from the listed inventors.

The reexamination certificate that will ultimately issue as a result of this proceeding will contain the appropriate change of inventorship information consistent with the petition and this decision.

Any inquiries concerning this communication should be directed to Andres Kashnikow, Supervisory Patent Reexamination Specialist, at telephone number (571) 272-4361.

All correspondence relating to this *inter partes* reexamination should be directed as follows:

By EFS: See 37 CFR 1.8(a)(C)(ii)

By Mail to: Mail Stop *Inter Partes* Reexam
Central Reexamination Unit
Commissioner for Patents
United States Patent & Trademark Office
P. O. Box 1450
Alexandria, VA 22313-1450

By Fax to: (571) 273-9900
Central Reexamination Unit

By Hand: Customer Service Window
Randolph Building
401 Dulany Street
Alexandria, VA 22314

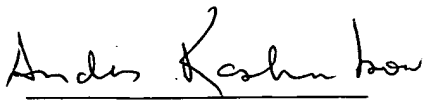

Andres Kashnikow
SPRS, CRU 3993
Central Reexamination Unit

UNITED STATES PATENT AND TRADEMARK OFFICE

UNITED STATES DEPARTMENT OF COMMERCE
United States Patent and Trademark Office
Address: COMMISSIONER FOR PATENTS
P.O. Box 1450
Alexandria, Virginia 22313-1450
www.uspto.gov

APPLICATION NO.	FILING DATE	FIRST NAMED INVENTOR	ATTORNEY DOCKET NO.	CONFIRMATION NO.
95/001,614	05/03/2011	7,349,012	51020-056USC1RX2	2570

42532 7590 02/09/2012

PROSKAUER ROSE LLP
ONE INTERNATIONAL PLACE
BOSTON, MA 02110

EXAMINER	
ART UNIT	PAPER NUMBER

DATE MAILED: 02/09/2012

Please find below and/or attached an Office communication concerning this application or proceeding.

UNITED STATES PATENT AND TRADEMARK OFFICE

Commissioner for Patents
United States Patents and Trademark Office
P.O.Box 1450
Alexandria, VA 22313-1450
www.uspto.gov

DO NOT USE IN PALM PRINTER

THIRD PARTY REQUESTER'S CORRESPONDENCE ADDRESS
STERNE, KESSLER, GOLDSTEIN & FOX PLLC
1100 NEW YORK AVENUE, NW.
WASHINGTON, DC 20005

Date: MAILED

FEB 09 2012

CENTRAL REEXAMINATION UNIT

Transmittal of Communication to Third Party Requester
Inter Partes Reexamination

REEXAMINATION CONTROL NO. : 95001614 + 90009870
PATENT NO. : 7349012
TECHNOLOGY CENTER : 3999
ART UNIT : 3992

Enclosed is a copy of the latest communication from the United States Patent and Trademark Office in the above identified Reexamination proceeding. 37 CFR 1.903.

Prior to the filing of a Notice of Appeal, each time the patent owner responds to this communication, the third party requester of the inter partes reexamination may once file written comments within a period of 30 days from the date of service of the patent owner's response. This 30-day time period is statutory (35 U.S.C. 314(b)(2)), and, as such, it cannot be extended. See also 37 CFR 1.947.

If an ex parte reexamination has been merged with the inter partes reexamination, no responsive submission by any ex parte third party requester is permitted.

All correspondence relating to this inter partes reexamination proceeding should be directed to the Central Reexamination Unit at the mail, FAX, or hand-carry addresses given at the end of the communication enclosed with this transmittal.

UNITED STATES PATENT AND TRADEMARK OFFICE

Commissioner for Patents
United States Patent and Trademark Office
P.O. Box 1450
Alexandria, VA 22313-1450
www.uspto.gov

MAILED

FEB 09 2012

CENTRAL REEXAMINATION UNIT

Proskauer Rose LLP
One International Place
Boston, MA 02110

(For Patent Owner)

Oblon, Spivak, McClelland, Maier
& Neustadt, L.L.P.
1940 Duke Street
Alexandria, VA 22314

(For the 90/009,870 Requester)

Sterne, Kessler, Goldstein & Fox PLLC
1100 New York Avenue, NW
Washington, D.C. 20005

(For the 95/001,614 Requester)

In re Takezawa et al.
Ex Parte Reexamination Proceeding
Control No.: 90/009,870
Filed: January 11, 2011
For: U.S. Patent No. 7,349,012 B2

In re Takezawa et al.
Inter Partes Reexamination Proceeding
Control No.: 95/001,614
Filed: May 3, 2011
For: U.S. Patent No. 7,349,012 B2

DECISION
SUA SPONTE
TO MERGE
REEXAMINATION
PROCEEDINGS

The above-captioned reexamination proceedings are before the Office of Patent Legal Administration for *sua sponte* consideration on merging the above proceedings.

Ex parte reexamination proceeding No. 90/009,870 and *inter partes* reexamination proceeding No. 95/001,614 **are merged** into a single proceeding.

BACKGROUND

1. On March 25, 2008, United States Patent Number 7,349,012 B2 ("the '012 patent") issued to Takezawa et al. with 5 claims.

2. On January 11, 2011, a request for *ex parte* reexamination of claims 1-5 of the '012 patent was filed by a third party requester, Research in Motion Limited, and assigned Reexamination Control No. 90/009,870 ("the '9870 proceeding").

3. On March 24, 2011, *ex parte* reexamination of claims 1-5 of the '012 patent was granted in the '9870 reexamination proceeding. The order was accompanied by a non-final

Office action.

4. On May 3, 2011, a request for *inter partes* reexamination of claims 1-5 of the '012 patent was filed by a third party requester and assigned Reexamination Control No. 95/001,614 ("the '1614 proceeding"). The request identified Apple Inc. and HTC Corporation ("the *inter partes* third party requester") as the real parties in interest.

5. On May 24, 2011, the patent owner filed a response to the non-final Office action in the '9870 proceeding. The response included an amendment in which claim 3 was amended and new claims 6-23 were added.

6. On August 1, 2011, *inter partes* reexamination of claims 1-5 of the '012 patent was granted in the '1614 proceeding.

7. To date, no Office action has been issued in the '1614 proceeding.

DECISION

I. MERGER OF PROCEEDINGS

Reexamination has been ordered in two proceedings for the same claims of the same patent. One of the proceedings (the '9870 proceeding) is an *ex parte* proceeding. The other proceeding (the '1614 proceeding) is an *inter partes* proceeding. Both proceedings are still pending, and have not been terminated. In addition, during a telephonic interview with a USPTO official on February 4, 2011, the patent owner agreed to waive its right to file a statement under 37 CFR 1.530 in the *ex parte* proceeding. Therefore, consideration of merger is ripe at this point in time.

MPEP 2686.01 points out:

> Where a second request for reexamination is filed and reexamination is ordered, and a first reexamination proceeding is pending, the proceedings will be merged where the Office (in its discretion) deems it appropriate to do so, to facilitate the orderly handling of the proceedings. However, a decision not to merge is within the sole discretion of the Office to facilitate/carry out the statutory mandate of 35 U.S.C. 314(c) to conduct reexamination proceedings with "special dispatch."

In this instance, based upon the record as a whole, it is found, based on the facts as they exist at present, that merger of the proceedings should facilitate the orderly handling of the proceedings with special dispatch. Accordingly, the 90/009,870 and 95/001,614 proceedings **are hereby merged**. The merged proceeding will be conducted in accordance with the guidelines and requirements that follow.

II. THE SAME CLAIMS MUST BE MAINTAINED IN BOTH PROCEEDINGS

The patent owner is required to maintain the same claims (and specification) in both files throughout the merged proceeding. An amendment accompanied the patent owner's May 24, 2011 response in the '9870 *ex parte* reexamination proceeding. Claim 3 has been amended and new claims 6-23 have been added in the '9870 *ex parte* proceeding, while the claims in the '1614 *inter partes* proceeding have not been so amended. Thus, the claims are not currently the same in both proceeding files. An Office action requiring an amendment placing the claims of both proceedings in identical form is being issued concurrently with this decision. The patent owner must respond to the Office action in accordance with the procedure provided in 37 CFR 1.111. The *inter partes* third party requester will then have an opportunity to comment on the patent owner's response in accordance with the procedures in 37 CFR 1.947.

The patent owner is required to maintain the same claims (and specification) in both files *throughout the merged proceeding.*

III. CONDUCT OF MERGED PROCEEDING

A. Governing regulations for the merged proceeding:

The present decision merges an *ex parte* reexamination proceeding with an *inter partes* reexamination proceeding. Pursuant to 37 CFR 1.989(b), the merged proceeding is governed by 37 CFR 1.902 through 1.997, except that the rights of the third party requester of the *ex parte* reexamination are governed by 37 CFR 1.510 through 1.560.

B. *Inter partes* Third Party Requester Participation:

1. Comment rights:

The *inter partes* third party requester can comment pursuant to 35 U.S.C. 314(b)(2).[1] First, an *inter partes* requester's right to comment is contingent upon the patent owner responding to, or commenting on, an Office action. Second, the *inter partes* requester's right to comment is limited to issues raised in either the Office action or the patent owner's response to the action. Finally, the *inter partes* requester's comments must be submitted within 30 days from the date of service of the patent owner's response. An *inter partes* requester does not have a right to comment on any issue raised outside the confines of the statute, e.g. issues raised in a previous Office action (but not raised in the most recent Office action or response) or the request and comments from the *ex parte* requester. The *inter partes* requester's comments must be submitted within the statutory time period of 30 days from date of service of the patent owner's response.

[1] Each time that the patent owner files a response to an action on the merits from the United States Patent and Trademark Office ("Office"), the *inter partes* third-party requester shall have one opportunity to file written comments addressing issues raised by the action of the Office or the patent owner's response thereto, if those written comments are received by the Office within 30 days after the date of service of the patent owner's response.

2. Appeal Rights:

The *inter partes* reexamination procedures for taking appeal, and for participating in the patent owner's appeal, are explained in MPEP 2674 through 2675 and 2678 through 2683.[2] As pointed out in MPEP 2674:

> A notice of appeal by a third party requester must identify each rejection *that was previously proposed by that* third *party requester* which the third party requester intends to contest. It is not sufficient to merely appeal from the allowance of a claim (i.e., the examiner's finding of a claim patentable); the third party requester must identify each previously proposed rejection to be contested.

Thus, the *inter partes* reexamination requester's appeal must **only** be taken from the finding(s) of patentability of claims in the RAN as to the rejections the third party requester proposed in the *inter partes* reexamination request (not as to the rejections proposed in the *ex parte* reexamination request), and any that the *inter partes* third party requester properly added during the examination stage of the merged proceeding. Also, as provided by 37 CFR 41.67(c)(1)(vi):

> No new ground of rejection can be proposed by a third party requester appellant, unless such ground was withdrawn by the examiner during the prosecution of the proceeding, and the third party requester has not yet had an opportunity to propose it as a third party requester proposed ground of rejection.

Thus, an appellant's brief shall present a concise statement of each issue. And, no new ground of rejection (i.e., a ground that the requester did not propose in the *inter partes* reexamination request, or during the merged proceeding) can be proposed by the *inter partes* third party requester appellant, unless that ground was withdrawn by the examiner during the prosecution of the proceeding, and the *inter partes* third party requester did not yet have an opportunity to propose it as a third party requester proposed ground of rejection.

C. Papers mailed/filed:

All papers mailed by the Office throughout the merged proceeding will take the form of a single action which applies to both proceedings. All papers issued by the Office, or filed by the patent owner and the *inter partes* third party requester, will contain the identifying data for both files and will be physically entered in each reexamination file. All papers filed by the patent owner and the *inter partes* third party requester must consist of a single paper, **filed in duplicate**, each bearing a signature and identifying data for both files, for entry into each file.

All papers filed by the patent owner and the *inter partes* third party requester should be directed:

---

[2] As noted above, the rights of the *ex parte* requester are governed by 37 CFR 1.510 through 1.560. The active participation of the *ex parte* requester ends with the reply pursuant to 37 CFR 1.535, and no further submissions on behalf of the *ex parte* requester will be acknowledged or considered. *See* 37 CFR 1.550(g).

by Mail to:	Attn: Mail Stop "*Inter Partes* Reexam" Central Reexamination Unit Commissioner for Patents P.O. Box 1450 Alexandria, VA 22313-1450
by FAX to:	(571) 273-9900 Central Reexamination Unit
by Hand to:	Customer Service Window Attn: Central Reexamination Unit Randolph Building, Lobby Level 401 Dulany Street Alexandria, VA 22314
by EFS:	Registered users may submit papers via the electronic filing system EFS-Web, at: https://efs.uspto.gov/efile/myportal/efs-registered

The patent owner and the *inter partes* requester are reminded that every paper filed (including papers filed *via* facsimile transmission) in the merged proceeding subsequent to this decision must be served on every other party in the merged proceeding, and every paper filed must reflect that such paper was served on every other party in the merged proceeding, pursuant to 37 CFR 1.903. All papers are to be addressed to the Central Reexamination Unit as provided above.

D. Amendments:

The filing of any amendments to the drawings, specification or claims must comply with 37 CFR 1.943, which incorporates the provisions of 37 CFR 1.530, and the guidelines of MPEP § 2666.01, which in turn references the guidelines of MPEP § 2250.

37 CFR 1.121 does not apply to amendments in reexamination. Accordingly, clean copies of the amended claims are not required and are not to be submitted; rather amendments are to be presented via markings pursuant to paragraph 37 CFR 1.530(f), except that a claim should be canceled by a statement canceling the claim, without presentation of the text of the claim.

Pursuant to 37 CFR 1.530(i), all amendments must be made relative to the patent specification, including the claims, and drawings, which are in effect as of the date of filing the request for reexamination. *Amendments are not to be made relative to previous amendments.* Thus, for all amendments, all words not appearing in the patent are always underlined, and only words being deleted from the patent appear in brackets.

E. Fees:

Where a paper is filed that requires payment of a fee (*e.g.*, petition fee, excess claims fee, extension of time fee, appeal fee, brief fee, oral hearing fee), only a single fee need be paid. For example, only one fee need be paid for any patent owner's appellant brief (or that of the *inter partes* reexamination requester) which may be filed, even though the brief relates to merged multiple proceedings, and copies must be filed (as pointed out above) for each file in the merged proceeding.

F. Citation of Patents and Printed Publications:

Upon return of the present merged proceeding to the examiner, the examiner will review the files to ensure that each file contains identical citations of prior patents and printed publications, and will cite such documents as are necessary as part of the next action in order to place the files in that condition.

G. Appeal Procedure Reminders for *Inter Partes* Reexamination

The parties are reminded of the procedures for taking appeal in an *inter partes* reexamination as explained in MPEP 2674 and 2675. The appeal must only be taken from (1) the rejection(s) of the claims in the Right of Appeal Notice (RAN) that the *patent owner* proposes to contest, or (2) the finding(s) of patentability of claims in the RAN that the *inter partes third party requester* proposes to contest. In the notice of appeal, the patent owner must identify each claim rejected by examiner that the patent owner intends to contest. The *inter partes* third party requester must identify each rejection *that was previously proposed by the inter partes third party requester* that the *inter partes* third party requester intends to contest, and each rejection made and later withdrawn by the examiner that the *inter partes* third party requester intends to contest. No new ground of rejection (including one proposed by another requester, but not the appellant *inter partes* requester) can be proposed by the *inter partes* third party requester appellant, unless such ground was withdrawn by the examiner during the prosecution of the proceeding, and the *inter partes* third party requester has not yet had an opportunity to propose it as a third party requester proposed ground of rejection. See 37 CFR 41.67(c)(1)(vi) as to the proposed rejections that the *inter partes* third party requester can challenge in the appellant brief.

CONCLUSION

1. *Ex parte* Reexamination Control No. 90/009,870 and *inter partes* Reexamination Control No. 95/001,614 are **merged into a single proceeding**, to be conducted in accordance with the procedure set forth above in Part III of this decision.

2. The examiner should not issue any further Office action for the present merged proceeding until after the earlier of: (a) the submission of the required response to the concurrently mailed Office action (see II above) to place the same amendment in all

proceedings and the *inter partes* requester's comments on that response, or (b) the expiration of the time for filing the required response and any comments the *inter partes* requester elects to file.

3. Any questions concerning this communication should be directed to Susy Tsang-Foster, Legal Advisor, at 571-272-7711.

Pinchus M. Laufer
Senior Legal Advisor
Office of Patent Legal Administration

November 22, 2011

UNITED STATES PATENT AND TRADEMARK OFFICE

Commissioner for Patents
United States Patent and Trademark Office
P.O. Box 1450
Alexandria, VA 22313-1450
www.uspto.gov

DOCKET CLERK
KELLY & KRAUSE, LP
1000 JORIE BOULEVARD
SUITE 144
OAK BROOK, IL 60523

In re Application of
SOBOTA ET AL.,
Control No. 95/001,617
Filed: MAY 9, 2011
Attorney Docket No. 723-2844

DECISION ON PETITION
TO WITHDRAW
FROM RECORD

This is a decision on the Request to Withdraw as attorney or agent of record under 37 C.F.R. § 1.36(b), filed January 16, 2012.

The request is **APPROVED**.

A grantable request to withdraw as attorney/agent of record must be signed by every attorney/agent seeking to withdraw or contain a clear indication that one attorney is signing on behalf of another/others. A request to withdraw will not be approved unless at least 30 (thirty) days would remain between the date of approval and the later of the expiration date of a time to file a response or the expiration date of the maximum time period which can be extended under 37 C.F.R. § 1.136(a).

The request was signed by Joseph P. Krause on behalf of all attorneys of record. Applicant is reminded that there is no attorney of record at this time. All future communications from the Office will be directed to the first named signing inventor at the first copied address below until otherwise properly notified by the applicant.

Telephone inquiries concerning this decision should be directed to Manuel Saldana at 571-272-7740.

Alexander Kalinowski
Supervisory Patent Examiner
CRU 3992

cc : ELEVEN ENGINEERING GAME CONTROL, LLC.
65 EAST 55TH STREET, 23RD FLOOR
NEW YORK, NY 10022 (Patent Owner)

cc: NIXON & VANDERHYE, PC
901 NORTH GLEBE ROAD
11TH FLOOR
ARLINGTON, VA 22203 (Third Party Requester)

UNITED STATES PATENT AND TRADEMARK OFFICE

UNITED STATES DEPARTMENT OF COMMERCE
United States Patent and Trademark Office
Address: COMMISSIONER FOR PATENTS
P.O. Box 1450
Alexandria, Virginia 22313-1450
www.uspto.gov

APPLICATION NO.	FILING DATE	FIRST NAMED INVENTOR	ATTORNEY DOCKET NO.	CONFIRMATION NO.
95/001,617	05/09/2011	John Sobota	723-2844	9929

7590 03/01/2012

ELEVEN ENGINEERING GAME
CONTROL, LLC.
65 EAST 55TH STREET
23RD FLOOR
NEW YORK, NY 10022

EXAMINER	
HOTALING, JOHN M	
ART UNIT	PAPER NUMBER
3992	
MAIL DATE	DELIVERY MODE
03/01/2012	PAPER

Please find below and/or attached an Office communication concerning this application or proceeding.

The time period for reply, if any, is set in the attached communication.

UNITED STATES PATENT AND TRADEMARK OFFICE

UNITED STATES DEPARTMENT OF COMMERCE
United States Patent and Trademark Office
Address: COMMISSIONER FOR PATENTS
P.O. Box 1450
Alexandria, Virginia 22313-1450
www.uspto.gov

APPLICATION NO.	FILING DATE	FIRST NAMED INVENTOR	ATTORNEY DOCKET NO.	CONFIRMATION NO.
95/001,486	11/15/2010	6238289	SCEA 3.6-014	9635

7590 03/01/2012

ELEVEN ENGINEERING GAME CONTROL, LLC
65 EAST 55th STREET
23rd FLOOR
NEW YORK, NY 10022

EXAMINER	
HOTALING, JOHN M	
ART UNIT	**PAPER NUMBER**
3992	
MAIL DATE	**DELIVERY MODE**
03/01/2012	PAPER

Please find below and/or attached an Office communication concerning this application or proceeding.

The time period for reply, if any, is set in the attached communication.

UNITED STATES PATENT AND TRADEMARK OFFICE

Commissioner for Patents
United States Patents and Trademark Office
P.O.Box 1450
Alexandria, VA 22313-1450
www.uspto.gov

MAILED

MAR 0 1 2012

CENTRAL REEXAMINATION UNIT

DO NOT USE IN PALM PRINTER

THIRD PARTY REQUESTER'S CORRESPONDENCE ADDRESS

NIXON & VANDERHYE, PC
901 NORTH GLEBE ROAD
11th FLOOR
ARLINGTON, VA 22203

Date:

Transmittal of Communication to Third Party Requester
Inter Partes Reexamination

REEXAMINATION CONTROL NO. : 95001617
PATENT NO. : 6238289
TECHNOLOGY CENTER : 3999
ART UNIT : 3993

Enclosed is a copy of the latest communication from the United States Patent and Trademark Office in the above identified Reexamination proceeding. 37 CFR 1.903.

Prior to the filing of a Notice of Appeal, each time the patent owner responds to this communication, the third party requester of the inter partes reexamination may once file written comments within a period of 30 days from the date of service of the patent owner's response. This 30-day time period is statutory (35 U.S.C. 314(b)(2)), and, as such, it cannot be extended. See also 37 CFR 1.947.

If an ex parte reexamination has been merged with the inter partes reexamination, no responsive submission by any ex parte third party requester is permitted.

All correspondence relating to this inter partes reexamination proceeding should be directed to the Central Reexamination Unit at the mail, FAX, or hand-carry addresses given at the end of the communication enclosed with this transmittal.

UNITED STATES PATENT AND TRADEMARK OFFICE

Commissioner for Patents
United States Patents and Trademark Office
P.O.Box 1450
Alexandria, VA 22313-1450
www.uspto.gov

DO NOT USE IN PALM PRINTER

THIRD PARTY REQUESTER'S CORRESPONDENCE ADDRESS
Andrew T. Zidel
LERNER DAVID LITTENBERG ET AL.
600 South Avenue West
Westfield, NJ 07090

MAILED
Date: MAR 0 1 2012
CENTRAL REEXAMINATION UNIT

Transmittal of Communication to Third Party Requester
Inter Partes Reexamination

REEXAMINATION CONTROL NO. : 95001486
PATENT NO. : 6238289
TECHNOLOGY CENTER : 3999
ART UNIT : 3993

Enclosed is a copy of the latest communication from the United States Patent and Trademark Office in the above identified Reexamination proceeding. 37 CFR 1.903.

Prior to the filing of a Notice of Appeal, each time the patent owner responds to this communication, the third party requester of the inter partes reexamination may once file written comments within a period of 30 days from the date of service of the patent owner's response. This 30-day time period is statutory (35 U.S.C. 314(b)(2)), and, as such, it cannot be extended. See also 37 CFR 1.947.

If an ex parte reexamination has been merged with the inter partes reexamination, no responsive submission by any ex parte third party requester is permitted.

All correspondence relating to this inter partes reexamination proceeding should be directed to the Central Reexamination Unit at the mail, FAX, or hand-carry addresses given at the end of the communication enclosed with this transmittal.

UNITED STATES PATENT AND TRADEMARK OFFICE

Commissioner for Patents
United States Patent and Trademark Office
P.O. Box 1450
Alexandria, VA 22313-1450
www.uspto.gov

ELEVEN ENGINEERING GAME CONTROL, LLC (For Patent Owner)
65 EAST 55th STREET
23rd FLOOR
NEW YORK NY 10022

MAILED

MAR 0 1 2012

CENTRAL REEXAMINATION UNIT

ANDREW T. ZIDEL (For the '1486 Requester)
LERNER, DAVID, LITTENBERG ET AL.
600 SOUTH AVENUE WEST
WESTFIELD, NJ 07090

NIXON & VANDERHYE, PC (For the '1617 Requester)
901 NORTH GLEBE ROAD
11TH FLOOR
ARLINGTON, VA 22203

Inter Partes Reexamination Proceeding
Control No. 95/001,486
Filed: November 15, 2010
For: U.S. Patent No. 6,238,289

Inter Partes Reexamination Proceeding
Control No. 95/001,617
Filed: May 9, 2011
For: U.S. Patent No. 6,238,289

DECISION *SUA SPONTE* TO MERGE REEXAMINATION PROCEEDINGS

The above-captioned reexamination proceedings are before the Office of Patent Legal Administration for *sua sponte* consideration of whether the proceedings should be merged (consolidated) at this time.

REVIEW OF RELEVANT FACTS

1. On May 29, 2001, U.S. Patent No. 6,238,289 (the '289 patent) issued to Sobota et al. with 20 claims.

2. On November 15, 2010, a first request for *inter partes* reexamination of claims 1-4, 6, and 10-13 of the '289 patent was filed by a third party requester and assigned Reexamination Control No. 95/001,486 ("the '1486 proceeding"). The request identified Sony Computer Entertainment America, LLC ("the 1486 requester") as the real party in interest.

3. On January 31, 2011, *inter partes* reexamination was ordered on claims 1-4, 6, and 10-13 of the '289 patent in the '1486 proceeding. An Office action was concurrently issued in the proceeding, rejecting claims 1-4, 6, and 10-13 of the '289 patent.

4. On March 31, 2011, patent owner timely filed, in the '1486 proceeding, an amendment and response to the January 31, 2011 Office action, adding new claims 21-49. No claims were amended or canceled.

5. On April 29, 2011, third party request timely filed comments.

6. On May 9, 2011, a second request for *inter partes* reexamination of claims 1-20 of the '289 patent was filed by a third party requester and assigned Reexamination Control No. 95/001,617 ("the '1617 proceeding"). The request identified Nintendo of America and Nintendo Co., Ltd. ("the 1617 requester") as the real party in interest.

7. On August 8, 2011, *inter partes* reexamination was ordered on claims 1-20 of the '289 patent in the '1617 proceeding. An Office action was not concurrently issued in the proceeding. The order indicated that an Office action would issue in due course.

8. To date, no Office action has issued in the '1617 *inter partes* proceeding, and no further Office action has issued in the '1486 *inter partes* proceeding.

DECISION

I. MERGER OF PROCEEDINGS

Reexamination is ordered in the two above-captioned proceedings for overlapping claims of the same patent. Both proceedings are *inter partes* reexamination proceedings. Both proceedings are still pending, and have not been terminated. Therefore, consideration of merger is ripe at this point in time.

MPEP 2686.01 points out:

> Where a second request for reexamination is filed and reexamination is ordered, and a first reexamination proceeding is pending, the proceedings will be merged where the Office (in its discretion) deems it appropriate to do so, to facilitate the orderly handling of the proceedings. However, a decision not to merge is within the sole discretion of the Office to facilitate/carry out the statutory mandate of 35 U.S.C. 314(c) to conduct reexamination proceedings with "special dispatch."

The 95/001,486 and 95/001,617 *inter partes* proceedings are merged. The merged proceeding will be conducted in accordance with the guidelines and requirements that follow.

II. THE SAME CLAIMS MUST BE MAINTAINED IN ALL PROCEEDINGS

Patent owner is required to maintain the same claims (and specification) in both files throughout the merged proceeding. New claims 21-49 have been proposed by amendment in the '1486 proceeding, while there is no corresponding amendment in the '1617 proceeding. Thus, the claims are not currently the same in both files. An Office action requiring an amendment placing the claims in identical form is being issued concurrently with this decision. Patent owner must respond to the Office action in accordance with the procedures in 37 CFR 1.111. The third party requesters will then have an opportunity to comment on patent owner's response in accordance with the procedures in 37 CFR 1.947. It is to be noted that if the '1486 requester chooses to file a comments paper after the patent owner response, the filing of such will be treated as comments in substitution for the comments filed on April 29, 2011. In that event, the April 29, 2011 comments paper would not be considered by the examiner. Accordingly, should '1486 requester choose to file a substitute comments paper, then '1486 requester should include any comments from the April 29, 2011 comments that it wishes considered in any such substitute comments paper.

III. CONDUCT OF MERGED PROCEEDING

A. Governing regulations for the merged proceeding:

The present decision merges two *inter partes* reexamination proceedings. Pursuant to 37 CFR 1.989(b), the merged proceeding is governed by 37 CFR §§ 1.902 through 1.997.

B. *Inter partes* Third Party Requester Participation:

1. Comment rights:

Upon merger of proceedings all *inter partes* requesters can comment pursuant to 35 U.S.C. 314(b)(2).[1] First, an *inter partes* requesters' right to comment is contingent upon the patent owner responding to, or commenting on, an Office action. Second, an *inter partes* requesters' right to comment is limited to issues raised in either the Office action or the patent owner's response to the action. Finally, the *inter partes* requesters' comments must be submitted within the statutory time period of 30 days from date of service of patent owner's response.

No *inter partes* requester has a right to comment on any issue raised outside the confines of the statute, e.g. issues raised in a previous Office action (but not raised in the most recent Office action or response) or the request and comments from another requester.

---

[1] Each time that the patent owner files a response to an action on the merits from the Patent and Trademark Office, the third-party requester shall have one opportunity to file written comments addressing issues raised by the action of the Office or the patent owner's response thereto, if those written comments are received by the Office within 30 days after the date of service of the patent owner's response.

2. Appeal Rights:

The *inter partes* reexamination procedures for taking appeal, and for participating in the patent owner's appeal, are explained in MPEP 2674 through 2675.02, 2678 through 2683. As pointed out in MPEP 2674:

> A notice of appeal by a third party requester must identify each rejection *that was previously proposed by that third party requester* which the third party requester intends to contest. It is not sufficient to merely appeal from the allowance of a claim (i.e., the examiner's finding of a claim patentable); the third party requester must identify each previously proposed rejection to be contested.

Thus, each *inter partes* reexamination requester's appeal must only be taken from the finding(s) of patentability of claims in the RAN that the individual third party requester proposed in the request, and any that the individual third party requester properly added during the examination stage of the merged proceeding. Also, as provided by 37 CFR 41.67(c)(1)(vi):

> No new ground of rejection can be proposed by a third party requester appellant, unless such ground was withdrawn by the examiner during the prosecution of the proceeding, and the third party requester has not yet had an opportunity to propose it as a third party requester proposed ground of rejection.

Thus, the appellant's brief shall present a concise statement of each issue. And, no new ground of rejection (i.e., a ground that the individual requester did not propose) can be proposed by a third party requester appellant, unless that ground was withdrawn by the examiner during the prosecution of the proceeding, and the third party requester did not yet have an opportunity to propose it as a third party requester proposed ground of rejection.

The '1486 *inter partes* third party requester did not propose any rejections of claims 5, 7-9, and 14-20 in the request for reexamination. Therefore, the '1486 requester does not have an appeal right to claims 5, 7-9, and 14-20 as they appear in the '289 patent.

C. Papers mailed/filed:

All papers mailed by the Office throughout the merged proceeding will take the form of a single action which applies to all proceedings. All papers issued by the Office, or filed by the patent owner and the third party requesters, will contain the identifying data for all proceedings and will be physically entered in each reexamination file. All papers filed by the patent owner and the third party requesters must consist of a single paper, **filed in duplicate**, each bearing a signature and identifying data for all files, for entry into each file.

All papers filed by patent owner and the third party requesters should be directed as follows:

by Mail to: Attn: Mail Stop "Inter Partes Reexam"
Central Reexamination Unit
Commissioner for Patents
P.O. Box 1450
Alexandria, VA 22313-1450

by FAX to: (571) 273-9900
Central Reexamination Unit

by Hand to: Customer Service Window
Attn: Central Reexamination Unit
Randolph Building, Lobby Level
401 Dulany Street
Alexandria, VA 22314

by EFS: Registered users may submit papers via the electronic filing system EFS-Web, at:
https://efs.uspto.gov/efile/myportal/efs-registered

Patent owner and requesters are reminded that every paper filed in the merged proceeding subsequent to this decision must be served on all the other parties, and every paper filed must reflect that such paper was served on all the other parties, pursuant to 37 CFR 1.903. All papers are to be addressed to the Central Reexamination Unit as provided above.

D. Amendments:

The filing of any amendments to the drawings, specification or claims must comply with 37 CFR 1.943, which incorporates the provisions of 37 CFR 1.530, and the guidelines of MPEP § 2666.01, which in turn references the guidelines of MPEP § 2250.

37 CFR 1.121 does not apply to amendments in reexamination. Accordingly, clean copies of the amended claims are not required and are not to be submitted; rather amendments are to be presented via markings pursuant to paragraph 37 CFR 1.530(f), except that a claim should be canceled by a statement canceling the claim, without presentation of the text of the claim.

Pursuant to 37 CFR 1.530(i), all amendments must be made relative to the patent specification, including the claims, and drawings, which are in effect as of the date of filing the request for reexamination. *Amendments are not to be made relative to previous amendments.* Thus, for all amendments, all words not appearing in the patent are always underlined, and only words being deleted from the patent appear in brackets.

E. Fees:

Where a paper is filed that requires payment of a fee (e.g., petition fee, excess claims fee, extension of time fee, appeal fee, brief fee, oral hearing fee), only a single fee need be paid. For

example, only one fee need be paid for any patent owner's appellant brief (or that of an *inter partes* reexamination requester) which may be filed, even though the brief relates to merged multiple proceedings, and copies must be filed (as pointed out above) for each file in the merged proceeding.

F. Citation of Patents and Printed Publications:

Upon return of the present merged proceeding to the examiner, the examiner will review the files to ensure that each file contains identical citations of prior patents and printed publications, and will cite such documents as are necessary as part of the next action in order to place the files in that condition.

G. Appeal Procedure Reminders for *Inter Partes* Reexamination

The parties are reminded of the procedures for taking appeal in an *inter partes* reexamination as explained in MPEP 2674 and 2675. The appeal must only be taken from (1) the rejection(s) of the claims in the Right of Appeal Notice (RAN) that the patent owner proposes to contest, or (2) the finding(s) of patentability of claims in the RAN that the third party requester proposes to contest. Therefore, in the notice of appeal, the patent owner must identify each claim rejected by examiner that the patent owner intends to contest and the third party requester must identify each rejection that was previously proposed by that third party requester that the third party requester intends to contest. (37 CFR 41.61) The appellant's brief shall present a concise statement of each issue. Further, no new ground of rejection can be proposed by a third party requester appellant, unless such ground was withdrawn by the examiner during the prosecution of the proceeding, and the third party requester has not yet had an opportunity to propose it as a third party requester proposed ground of rejection. (37 CFR 41.67(c)(1)(vi))

CONCLUSION

1. *Inter partes* Reexamination Control Nos. 95/001,466, and 95/001,617 are merged into a single proceeding, to be conducted in accordance with the procedure set forth above in Part III of this decision.

2. Telephone inquiries related to the present decision should be directed to Joseph F. Weiss, Jr., Legal Advisor, at 571-272-7759.

Pinchus M. Laufer
Senior Legal Advisor
Office of Patent Legal Administration

February 7, 2012

UNITED STATES PATENT AND TRADEMARK OFFICE

UNITED STATES DEPARTMENT OF COMMERCE
United States Patent and Trademark Office
Address: COMMISSIONER FOR PATENTS
P.O. Box 1450
Alexandria, Virginia 22313-1450
www.uspto.gov

APPLICATION NO.	FILING DATE	FIRST NAMED INVENTOR	ATTORNEY DOCKET NO.	CONFIRMATION NO.
95/001,621 ~ 90011011	05/16/2011	7,241,034		1240

92045 7590 02/23/2012

The Caldwell Firm, LLC
PO Box 59655
Dept. SVIPGP
Dallas, TX 75229

EXAMINER	
ART UNIT	PAPER NUMBER

DATE MAILED: 02/23/2012

Please find below and/or attached an Office communication concerning this application or proceeding.

UNITED STATES PATENT AND TRADEMARK OFFICE

Commissioner for Patents
United States Patents and Trademark Office
P.O.Box 1450
Alexandria, VA 22313-1450
www.uspto.gov

DO NOT USE IN PALM PRINTER

THIRD PARTY REQUESTER'S CORRESPONDENCE ADDRESS

KENYON & KENYON LLP
ONE BROADWAY
NEW YORK, NY 10004

Date: 2-23-12

Transmittal of Communication to Third Party Requester
Inter Partes Reexamination

REEXAMINATION CONTROL NO. : 95001621 & 90/011011
PATENT NO. : 7241034
TECHNOLOGY CENTER : 3999
ART UNIT : 3992

Enclosed is a copy of the latest communication from the United States Patent and Trademark Office in the above identified Reexamination proceeding. 37 CFR 1.903.

Prior to the filing of a Notice of Appeal, each time the patent owner responds to this communication, the third party requester of the inter partes reexamination may once file written comments within a period of 30 days from the date of service of the patent owner's response. This 30-day time period is statutory (35 U.S.C. 314(b)(2)), and, as such, it cannot be extended. See also 37 CFR 1.947.

If an ex parte reexamination has been merged with the inter partes reexamination, no responsive submission by any ex parte third party requester is permitted.

All correspondence relating to this inter partes reexamination proceeding should be directed to the Central Reexamination Unit at the mail, FAX, or hand-carry addresses given at the end of the communication enclosed with this transmittal.

UNITED STATES PATENT AND TRADEMARK OFFICE

Commissioner for Patents
United States Patent and Trademark Office
P.O. Box 1450
Alexandria, VA 22313-1450
www.uspto.gov

The Caldwell Firm, LLC (For Patent Owner)
PO Box 59655
Dept. SVIPGP
Dallas TX 75229

Kenyon & Kenyon LLP (For the '1621 Requester)
One Broadway
New York, NY 10004

In re Smith *et al.*
Ex Parte Reexamination Proceeding
Control No.: 90/011,011
Filed: July 10, 2010
For: U.S. Patent No. 7,241,034

In re Smith *et al.*
Inter Partes Reexamination Proceeding
Control No.: 95/001,621
Filed: May 16, 2011
For: U.S. Patent No.: 7,241,034

DECISION
SUA SPONTE
TO MERGE
REEXAMINATION
PROCEEDINGS

The above-captioned reexamination proceedings are before the Office of Patent Legal Administration for *sua sponte* consideration on merging the above proceedings.

Ex parte reexamination proceeding No. 90/011,011 and *inter partes* reexamination proceeding No. 95/001,621 **are merged** into a single proceeding.

BACKGROUND

1. On July 10, 2007, United States Patent Number 7,241,034 ("the '034 patent") issued to Smith *et al.* with 5 claims.

2. On July 10, 2010, patent owner filed a request for *ex parte* reexamination of claims 1 and 3 of the '034 patent, which was assigned control number 90/011,011 ("the '11011 proceeding").[1]

3. On August 12, 2010, *ex parte* reexamination of claims 1 and 3 of the '034 patent was granted in the '11011 reexamination proceeding.

4. On October 12, 2010, the time period for submission of a patent owner's statement under 37 CFR 1.530(b) expired.

[1] Patent owner originally deposited a request on May 25, 2010 that was found incomplete by the Office and was subsequently supplemented until found sufficient to grant a filing date of July 10, 2010.

5. On January 12, 2011, the Office issued a non-final rejection in the '11011 proceeding.

6. On January 18, 2011, patent owner timely filed an informal/non-responsive amendment after an Office action.

7. On February 16, 2011, patent owner timely filed a substitute amendment, which amended claims 1-5 and added new claims 6-45.

8. On May 16, 2011, a request for *inter partes* reexamination of claims 1-5 of the '034 patent was filed by a third party requester, which was assigned Reexamination Control No. 95/001,621 ("the '1621 proceeding"). The request identified Volkswagen Group of America, Inc. ("the 1621 requester") as the real party in interest.

9. On June 23, 2011, *inter partes* reexamination of claims 1-5 of the '034 patent was granted in the '1621 proceeding.

10. On January 18, 2012, the Office issued a Notice of Defective Paper in the '11011 proceeding requesting correction of the February 16, 2011 substitute amendment.

11. On February 2, 2012, patent owner timely filed a second substitute amendment, which amended claims 1-5 and added new claims 6-41.

12. To date, no Office action has issued in the '1621 proceeding.

DECISION

I. MERGER OF PROCEEDINGS

Reexamination has been ordered in the above-captioned two proceedings for overlapping claims of the same patent. One of the proceedings (the '11011 proceeding) is an *ex parte* proceeding. The other proceeding (the '1621 proceeding) is an *inter partes* proceeding. Both proceedings are still pending, and have not been terminated. The time period for filing a patent owner statement under 37 CFR 1.530 in the *ex parte* proceeding has expired. Therefore, consideration of merger is ripe at this point in time.

MPEP 2686.01 points out:

> Where a second request for reexamination is filed and reexamination is ordered, and a first reexamination proceeding is pending, the proceedings will be merged where the Office (in its discretion) deems it appropriate to do so, to facilitate the orderly handling of the proceedings. However, a decision not to merge is within the sole discretion of the Office to facilitate/carry out the statutory mandate of 35 U.S.C. 314(c) to conduct reexamination proceedings with "special dispatch."

In this instance, based upon the record as a whole, it is found, based on the facts as they exist at present, that merger of the proceedings should facilitate the orderly handling of the proceedings with special dispatch. Accordingly, the 90/011,011 and 95/001,621 proceedings **are hereby merged**. The merged proceeding will be conducted in accordance with the guidelines and requirements that follow.

II. THE SAME CLAIMS MUST BE MAINTAINED IN BOTH PROCEEDINGS

Patent owner is required to maintain the same claims (and specification) in both files throughout the merged proceeding. An amendment accompanied the patent owner's statement in the '11011 *ex parte* reexamination proceeding. Originally issued claims 1-5 have all been amended and new claims 6-41 have been added in the '11011 *ex parte* proceeding, while the claims in the '1621 *inter partes* proceeding have not been so amended. Thus, the claims are not currently the same in both proceeding files. An Office action requiring an amendment placing the claims of both proceedings in identical form is being issued concurrently with this decision. Patent owner must respond to the Office action in accordance with the procedure provided in 37 CFR 1.111. The *inter partes* third party requester will then have an opportunity to comment on patent owner's response in accordance with the procedures in 37 CFR 1.947.

The patent owner is required to maintain the same claims (and specification) in both files *throughout the merged proceeding.*

III. CONDUCT OF MERGED PROCEEDING

A. Governing regulations for the merged proceeding:

The present decision merges an *ex parte* reexamination proceeding with an *inter partes* reexamination proceeding. Pursuant to 37 CFR 1.989(b), the merged proceeding is governed by 37 CFR 1.902 through 1.997.

B. *Inter partes* Third Party Requester Participation:

1. Comment rights:

The *inter partes* requester can comment pursuant to 35 U.S.C. 314(b)(2).[2] First, an *inter partes* requester's right to comment is contingent upon the patent owner responding to, or commenting on, an Office action. Second, the *inter partes* requester's right to comment is limited to issues raised in either the Office action or the patent owner's response to the action. Finally, the *inter partes* requester's comments must be submitted within 30 days from the date of service of the patent owner's response. An *inter partes* requester does not have a right to comment on any issue raised outside the confines of the statute, e.g. issues raised in a previous Office action (but

[2] Each time that the patent owner files a response to an action on the merits from the Patent and Trademark Office, the *inter partes* third-party requester shall have one opportunity to file written comments addressing issues raised by the action of the Office or the patent owner's response thereto, if those written comments are received by the Office within 30 days after the date of service of the patent owner's response.

not raised in the most recent Office action or response) or the request and comments from the *ex parte* requester. The *inter partes* requester's comments must be submitted within the statutory time period of 30 days from date of service of the patent owner's response.

2. Appeal Rights:

A discussion of third party requester's appeal rights can be found in section G below.

C. Papers mailed/filed:

All papers mailed by the Office throughout the merged proceeding will take the form of a single action which applies to both proceedings. All papers issued by the Office, or filed by the patent owner and the third party requester, will contain the identifying data for both files and will be physically entered in each reexamination file. All papers filed by the patent owner and the third party requester must consist of a single paper, **filed in duplicate**, each bearing a signature and identifying data for both files, for entry into each file.

All papers filed by the patent owner and the third party requesters should be directed:

by Mail to:	Attn: Mail Stop "*Inter Partes* Reexam" Central Reexamination Unit Commissioner for Patents P.O. Box 1450 Alexandria, VA 22313-1450
by FAX to:	(571) 273-9900 Central Reexamination Unit
by Hand to:	Customer Service Window Attn: Central Reexamination Unit Randolph Building, Lobby Level 401 Dulany Street Alexandria, VA 22314
by EFS:	Registered users may submit papers via the electronic filing system EFS-Web, at: https:// efs.uspto.gov/efile/myportal/efs-registered.

The patent owner and the *inter partes* requester are reminded that every paper filed (including papers filed *via* facsimile transmission) in the merged proceeding subsequent to this decision must be served on the other party, and every paper filed must reflect that such paper was served on the other party in the merged proceeding, pursuant to 37 CFR 1.903. All papers are to be addressed to the Central Reexamination Unit as provided above.

D. Amendments:

The filing of any amendments to the drawings, specification or claims must comply with 37 CFR 1.943, which incorporates the provisions of 37 CFR 1.530, and the guidelines of MPEP § 2666.01, which in turn references the guidelines of MPEP § 2250.

37 CFR 1.121 does not apply to amendments in reexamination. Accordingly, clean copies of the amended claims are not required and are not to be submitted; rather amendments are to be presented via markings pursuant to paragraph 37 CFR 1.530(f), except that a claim should be canceled by a statement canceling the claim, without presentation of the text of the claim.

Pursuant to 37 CFR 1.530(i), all amendments must be made relative to the patent specification, including the claims, and drawings, which are in effect as of the date of filing the request for reexamination. *Amendments are not to be made relative to previous amendments.* Thus, for all amendments, all words not appearing in the patent are always underlined, and only words being deleted from the patent appear in brackets.

E. Fees:

Where a paper is filed that requires payment of a fee (*e.g.*, petition fee, excess claims fee, extension of time fee, appeal fee, brief fee, oral hearing fee), only a single fee need be paid. For example, only one fee need be paid for any patent owner's appellant brief (or that of the *inter partes* reexamination requester) which may be filed, even though the brief relates to merged multiple proceedings, and copies must be filed (as pointed out above) for each file in the merged proceeding.

F. Citation of Patents and Printed Publications:

Upon return of the present merged proceeding to the examiner, the examiner will review the files to ensure that each file contains identical citations of prior patents and printed publications, and will cite such documents as are necessary as part of the next action in order to place the files in that condition.

G. Appeal Procedure Reminders for *Inter Partes* Reexamination

The *inter partes* reexamination procedures for taking appeal, and for participating in the patent owner's appeal, are explained in MPEP §§ 2674 through 2675 and 2678 through 2683.

With respect to a patent owner's notice of appeal, the appeal must only be taken from the rejection(s) of the claims in the Right of Appeal Notice (RAN) that the *patent owner* proposes to contest, and must identify each claim rejected by examiner that the patent owner intends to contest.

With respect to a third party requester's notice of appeal, the appeal must only be taken from the finding(s) of patentability of claims in the RAN that the *third party requester* proposes to

contest. As set forth in MPEP § 2674, the third party requester must identify in the notice of appeal each rejection *that was previously proposed by third party requester* that the third party requester intends to contest and each rejection made and later withdrawn by the examiner that the third party requester intends to contest. It is not sufficient to merely appeal from the allowance of a claim (i.e., the examiner's finding of a claim patentable); the third party requester must identify each previously proposed rejection to be contested.

No new ground of rejection can be proposed by a third party requester appellant, unless such ground was withdrawn by the examiner during the prosecution of the proceeding, and the third party requester has not yet had an opportunity to propose it as a third party requester proposed ground of rejection. See 37 CFR 41.67(c)(1)(vi) as to the proposed rejections that a requester can challenge in the appellant brief.

CONCLUSION

1. *Ex parte* Reexamination Control No. 90/011,011 and *inter partes* Reexamination Control No. 95/001,621 are **merged into a single proceeding**, to be conducted in accordance with the procedure set forth above in Part III of this decision.

2. The examiner should not issue any further Office action for the present merged proceeding until after the earlier of: (a) the submission of the required response to the concurrently mailed Office action (see II above) to place the same amendment in all proceedings and requesters' comments on that response, or (b) the expiration of the time for filing the required response and any comments requesters elect to file.

3. Any questions concerning this communication should be directed to Joseph F. Weiss, Jr., Legal Advisor, at 571-272-7759.

Pinchus M. Laufer
Senior Legal Advisor
Office of Patent Legal Administration

February 17, 2012

UNITED STATES PATENT AND TRADEMARK OFFICE

UNITED STATES DEPARTMENT OF COMMERCE
United States Patent and Trademark Office
Address: COMMISSIONER FOR PATENTS
P.O. Box 1450
Alexandria, Virginia 22313-1450
www.uspto.gov

APPLICATION NO.	FILING DATE	FIRST NAMED INVENTOR	ATTORNEY DOCKET NO.	CONFIRMATION NO.
95/001,627	05/20/2011	John Adam Edmonds	0111597.00125US1	7701

23483 7590 10/03/2011

WILMERHALE/BOSTON
60 STATE STREET
BOSTON, MA 02109

EXAMINER	
ART UNIT	PAPER NUMBER

DATE MAILED: 10/03/2011

Please find below and/or attached an Office communication concerning this application or proceeding.

UNITED STATES PATENT AND TRADEMARK OFFICE

Commissioner for Patents
United States Patents and Trademark Office
P.O.Box 1450
Alexandria, VA 22313-1450
www.uspto.gov

DO NOT USE IN PALM PRINTER

THIRD PARTY REQUESTER'S CORRESPONDENCE ADDRESS
ORRICK, HERRINGTON & SUTCLIFFE, LLP
IP PROSECUTION DEPARTMENT
4 PARK PLAZA SUITE 1600
IRVINE, CA 92614-2558

Date:

MAILED

OCT 03 2011

CENTRAL REEXAMINATION UNIT

Transmittal of Communication to Third Party Requester
Inter Partes Reexamination

REEXAMINATION CONTROL NO. : 95001627
PATENT NO. : 7737459
TECHNOLOGY CENTER : 3999
ART UNIT : 3992

Enclosed is a copy of the latest communication from the United States Patent and Trademark Office in the above identified Reexamination proceeding. 37 CFR 1.903.

Prior to the filing of a Notice of Appeal, each time the patent owner responds to this communication, the third party requester of the inter partes reexamination may once file written comments within a period of 30 days from the date of service of the patent owner's response. This 30-day time period is statutory (35 U.S.C. 314(b)(2)), and, as such, it cannot be extended. See also 37 CFR 1.947.

If an ex parte reexamination has been merged with the inter partes reexamination, no responsive submission by any ex parte third party requester is permitted.

All correspondence relating to this inter partes reexamination proceeding should be directed to the Central Reexamination Unit at the mail, FAX, or hand-carry addresses given at the end of the communication enclosed with this transmittal.

UNITED STATES PATENT AND TRADEMARK OFFICE

Commissioner for Patents
United States Patents and Trademark Office
P.O.Box 1450
Alexandria, VA 22313-1450
www.uspto.gov

DO NOT USE IN PALM PRINTER

THIRD PARTY REQUESTER'S CORRESPONDENCE ADDRESS

ORRICK, HERRINGTON & SUTCLIFFE, LLP
IP PROSECUTION DEPARTMENT
4 PARK PLAZA SUITE 1600
IRVINE, CA 92614-2558

Date:

Transmittal of Communication to Third Party Requester
Inter Partes Reexamination

REEXAMINATION CONTROL NO. : 95001627
PATENT NO. : 7737459
TECHNOLOGY CENTER : 3999
ART UNIT : 3992

Enclosed is a copy of the latest communication from the United States Patent and Trademark Office in the above identified Reexamination proceeding. 37 CFR 1.903.

Prior to the filing of a Notice of Appeal, each time the patent owner responds to this communication, the third party requester of the inter partes reexamination may once file written comments within a period of 30 days from the date of service of the patent owner's response. This 30-day time period is statutory (35 U.S.C. 314(b)(2)), and, as such, it cannot be extended. See also 37 CFR 1.947.

If an ex parte reexamination has been merged with the inter partes reexamination, no responsive submission by any ex parte third party requester is permitted.

All correspondence relating to this inter partes reexamination proceeding should be directed to the Central Reexamination Unit at the mail, FAX, or hand-carry addresses given at the end of the communication enclosed with this transmittal.

Decision on Petition for Extension of Time in Reexamination	Control No.: 95/001,627

MAILED

OCT 03 2011

CENTRAL REEXAMINATION UNIT

1. THIS IS A DECISION ON THE PETITION FILED September 19, 2011.

2. THIS DECISION IS ISSUED PURSUANT TO:
   - A. ☐ 37 CFR 1.550(c) – The time for taking any action by a patent owner in an *ex parte* reexamination proceeding will be extended only for sufficient cause and for a reasonable time specified.
   - B. ☒ 37 CFR 1.956 – The time for taking any action by a patent owner in an *inter partes* reexamination proceeding will be extended only for sufficient cause and for a reasonable time specified.

   The petition is before the Central Reexamination Unit for consideration.

3. FORMAL MATTERS
   Patent owner requests that the period for responding to the Office action mailed on July 26, 2011, which sets a 2-month period for filing a response thereto, be extended by one month.

   - A. ☒ Petition fee per 37 CFR §1.17(g)):
     - i. ☐ Petition includes authorization to debit a deposit account.
     - ii. ☐ Petition includes authorization to charge a credit card account.
     - iii. ☒ Other: electronically submitted.
   - B. ☒ Proper certificate of service was provided. (Not required in reexamination where patent owner is requester.)
   - C. ☒ Petition was timely filed.
   - D. ☒ Petition properly signed.

4. DECISION (See MPEP 2265 and 2665)
   - A. ☐ Granted or ☐ Granted-in-part for _____, because petitioner provided a factual accounting that established sufficient cause. (See 37 CFR 1.550(c) and 37 CFR 1.956).
     - ☐ Other/comment: _____.
   - B. ☒ Dismissed because:
     - i. ☐ Formal matters (See unchecked box(es) (A, B, C and/or D) in section 4 above).
     - ii. ☐ Petitioner failed to provide a factual accounting of reasonably diligent behavior by all those responsible for preparing a response to the outstanding Office action within the statutory time period.
     - iii. ☐ Petitioner failed to explain why, in spite of the action taken thus far, the requested additional time is needed.
     - iv. ☐ The statements provided fail to establish sufficient cause to warrant extension of the time for taking action (See attached).
     - v. ☒ The petition is moot.
     - vi. ☒ Other/comment: The response adding new claims 32-68 was timely filed.

5. CONCLUSION

   Telephone inquiries with regard to this decision should be directed to Eric Keasel at 571-272-4929. In his/her absence, calls may be directed to Mark Reinhart at 571-272-1611 in the Central Reexamination Unit.

Eric Keasel
[Signature]

ERIC S. KEASEL
CRU SPE-AU 3992
(Title)

UNITED STATES PATENT AND TRADEMARK OFFICE

UNITED STATES DEPARTMENT OF COMMERCE
United States Patent and Trademark Office
Address: COMMISSIONER FOR PATENTS
P.O. Box 1450
Alexandria, Virginia 22313-1450
www.uspto.gov

APPLICATION NO.	FILING DATE	FIRST NAMED INVENTOR	ATTORNEY DOCKET NO.	CONFIRMATION NO.
95/001,627	05/20/2011	John Adam Edmonds	0111597.00125US1	7701

23483 7590 02/28/2012

WILMERHALE/BOSTON
60 STATE STREET
BOSTON, MA 02109

EXAMINER	
ART UNIT	PAPER NUMBER

DATE MAILED: 02/28/2012

Please find below and/or attached an Office communication concerning this application or proceeding.

UNITED STATES PATENT AND TRADEMARK OFFICE

Commissioner for Patents
United States Patents and Trademark Office
P.O.Box 1450
Alexandria, VA 22313-1450
www.uspto.gov

DO NOT USE IN PALM PRINTER

THIRD PARTY REQUESTER'S CORRESPONDENCE ADDRESS

ORRICK, HERRINGTON & SUTCLIFFE, LLP
IP PROSECUTION DEPARTMENT
2050 MAIN STREET, SUITE 1100
IRVINE, CA 92614

Date: 2-28-12

Transmittal of Communication to Third Party Requester
Inter Partes Reexamination

REEXAMINATION CONTROL NO. : 95001627
PATENT NO. : 7737459
TECHNOLOGY CENTER : 3999
ART UNIT : 3992

Enclosed is a copy of the latest communication from the United States Patent and Trademark Office in the above identified Reexamination proceeding. 37 CFR 1.903.

Prior to the filing of a Notice of Appeal, each time the patent owner responds to this communication, the third party requester of the inter partes reexamination may once file written comments within a period of 30 days from the date of service of the patent owner's response. This 30-day time period is statutory (35 U.S.C. 314(b)(2)), and, as such, it cannot be extended. See also 37 CFR 1.947.

If an ex parte reexamination has been merged with the inter partes reexamination, no responsive submission by any ex parte third party requester is permitted.

All correspondence relating to this inter partes reexamination proceeding should be directed to the Central Reexamination Unit at the mail, FAX, or hand-carry addresses given at the end of the communication enclosed with this transmittal.

UNITED STATES PATENT AND TRADEMARK OFFICE

Commissioner for Patents
United States Patent and Trademark Office
P.O. Box 1450
Alexandria, VA 22313-1450
www.uspto.gov

MAILED

FEB 28 2012

CENTRAL REEXAMINATION UNIT

WilmerHale/Boston
60 State Street
Boston, MA 02019

(For Patent Owner)

IP Prosecution Department
Orrick, Herrington & Sutcliffe LLP
2050 Main Street, Suite 1100
Irvine, CA 92614

(For Third Party Requester)

In re Edmond *et al.*
Inter Partes Reexamination Proceeding
Control No. 95/001, 627
Filed: May 20, 2011
For: U.S. Patent No. 7,737,459

: **DECISION**
: **GRANTING PETITION**
: **UNDER § 1.183**

This is a decision on the October 25, 2011 patent owner petition entitled "Conditional Petition For Waiver of Rules Pursuant to 37 C.F.R. § 1.183."

The patent owner petition is before the Office of Patent Legal Administration.

The petition under 37 C.F.R. § 1.183 to request rule waiver and entry of the supplemental reply filed on October 25, 2011 is **granted** to the extent specified below.

BACKGROUND

- On May 20, 2011 request for *inter partes* reexamination of claims 1-31 of U.S. Patent 7,737,459 was filed by a third party requester. This proceeding was accorded control number 95/001,627 ("the '1627 proceeding").

- On July 26, 2011, reexamination was ordered, and a non-final Office action rejecting claims 1-31 was issued. A two month period was set for patent owner's response.

- On September 19, 2011, patent owner petitioned for extension of time of 1 month to respond to the July 26, 2011 Office action. This petition was based, in part, on the need for additional time to collect evidence to address the rejections made in the July 26, 2011 Office action.

- On September 26, 2011, patent owner filed a timely response which did not include evidence submissions.

- On October 3, 2011, the Office issued a decision dismissing the September 19, 2011 petition as moot, in view of the September 26, 2011 response.

- On October 25, 2011, patent owner filed a supplemental reply which included evidence submissions as discussed in the September 19, 2011 petition for extension of time. Patent owner filed a petition under 37 C.F.R. § 1.183 to waive rules barring entry of the reply, if required.

- On October 26, 2011, third party requester filed comments to the non-final Office action and patent owner's response of September 26, 2011.

- On November 17, 2011, third party requester filed a petition to oppose patent owner's October 26, 2011 petition.

APPLICABLE REGULATION

37 CFR § 1.183 states:

> In an extraordinary situation, when justice requires, any requirement of the regulations in this part which is not a requirement of the statutes may be suspended or waived by the Director or the Director's designee, *sua sponte*, or on petition of the interested party, subject to such other requirements as may be imposed. Any petition under this section must be accompanied by the petition fee set forth in § 1.17(f).

DECISION

The present patent owner petition under § 1.183 to waive the rules barring entry of a supplemental response was filed on October 25, 2011. Patent owner requests entry of this supplemental response, which contains evidence submitted for the purpose of rebutting positions taken by the Office in the non-final Office action of July 26, 2011.

Patent owner alleges that the instant situation is such that the "extraordinary situation" requirements of § 1.183 are met, justifying waiver of 37 C.F.R. 1.945(b), which restricts entry of a supplemental response, to the extent that the supplemental response is not found to comply with that rule. In support of the contention that the situation justifies relief under § 1.183, patent owner states, in part, the need of time beyond that set in the non-final Office action to procure evidence from certain individuals, including at least one individual having limited availability.

Rule 183 requires consideration of all relevant facts to determine whether justice requires relief. In this situation, patent owner had requested extension of time prior to the September 26, 2011 due date for the express purpose of obtaining additional evidence. However, the Office did not address the merits of the situation in dismissing that request, holding the request moot when patent owner submitted a timely response that did not contain evidence submissions.[1] It is also noted that the supplemental response added an additional delay of only one month to the handling of the proceeding.

In view of the entirety of the circumstances discussed above, extraordinary circumstances exist to justify waiver of the rules under § 1.183 to permit entry of patent owner's October 25, 2011 response. To effectuate 37 C.F.R. § 1.947, third party requester will be given 30 days from the mailing date of this decision to file comments responsive to the patent owner's comments.

CONCLUSION

1. The petition is **granted to the extent set forth herein**.

2. Since the present decision makes the patent owner response enterable, **third party requester has thirty (30) days from the date of mailing of this decision to submit comments pursuant to 37 C.F.R. § 1.947.**

3. The October 25, 2011 response will be entered by the Central Examination Unit (CRU). The CRU will await submission of third party comments, or the expiration of the time for same and then address the October 25, 2011 amendment under 37 C.F.R. § 1.945 and any third party requester comments under 37 C.F.R. § 1.947.

4. Any inquiry concerning this decision should be directed to Michael Cygan, Legal Advisor, at (571) 272-7700.

Brian E Hanlon

Brian Hanlon
Director
Office of Patent Legal Administration

February 27, 2011

[1] Patent owner properly recognized that the mere filing of a petition does not stay the period for response, pursuant to 37 C.F.R. 1.181(f). Accordingly, the inability to timely submit a desired response to the Office will not give rise to an "extraordinary situation" justifying waiver of the rules in the absence of other circumstances such as found in this proceeding.

UNITED STATES PATENT AND TRADEMARK OFFICE

UNITED STATES DEPARTMENT OF COMMERCE
United States Patent and Trademark Office
Address: COMMISSIONER FOR PATENTS
P.O. Box 1450
Alexandria, Virginia 22313-1450
www.uspto.gov

APPLICATION NO.	FILING DATE	FIRST NAMED INVENTOR	ATTORNEY DOCKET NO.	CONFIRMATION NO.
95/001,628	05/20/2011	Thaddeus John GABARA	42299.22	8345

13992 7590 01/17/2012

NDQ Special Reexam Group
1000 Louisiana Street, Fifty-Third Floor
Houston, TX 77002

EXAMINER	
ART UNIT	PAPER NUMBER

DATE MAILED: 01/17/2012

Please find below and/or attached an Office communication concerning this application or proceeding.

UNITED STATES PATENT AND TRADEMARK OFFICE

Commissioner for Patents
United States Patents and Trademark Office
P.O.Box 1450
Alexandria, VA 22313-1450
www.uspto.gov

DO NOT USE IN PALM PRINTER

THIRD PARTY REQUESTER'S CORRESPONDENCE ADDRESS
HAYNES AND BOONE, LLP IP SECTION
2323 VICTORY AVENUE
SUITE 700
DALLAS, TX 75219

Date:
MAILED
JAN 17 2012
CENTRAL REEXAMINATION UNIT

Transmittal of Communication to Third Party Requester
Inter Partes Reexamination

REEXAMINATION CONTROL NO. : 95001628
PATENT NO. : 7429899
TECHNOLOGY CENTER : 3999
ART UNIT : 3992

Enclosed is a copy of the latest communication from the United States Patent and Trademark Office in the above identified Reexamination proceeding. 37 CFR 1.903.

Prior to the filing of a Notice of Appeal, each time the patent owner responds to this communication, the third party requester of the inter partes reexamination may once file written comments within a period of 30 days from the date of service of the patent owner's response. This 30-day time period is statutory (35 U.S.C. 314(b)(2)), and, as such, it cannot be extended. See also 37 CFR 1.947.

If an ex parte reexamination has been merged with the inter partes reexamination, no responsive submission by any ex parte third party requester is permitted.

All correspondence relating to this inter partes reexamination proceeding should be directed to the Central Reexamination Unit at the mail, FAX, or hand-carry addresses given at the end of the communication enclosed with this transmittal.

UNITED STATES PATENT AND TRADEMARK OFFICE

COMMISSIONER FOR PATENTS
UNITED STATES PATENT AND TRADEMARK OFFICE
P.O. BOX 1450
ALEXANDRIA, VA 22313-1450
www.uspto.gov

NDQ Special Reexam Group
1000 Louisiana Street, Fifty-Third Floor
Houston, TX 77002

(For Patent Owner)

MAILED

JAN 17 2012

CENTRAL REEXAMINATION UNIT

Haynes and Boone, LLP
IP Section
2323 Victory Avenue, Suite 700
Dallas, TX 75219

(For Third Party Requester)

In re Gabara
Inter Partes Reexamination Proceeding
Control No. 95/001,628
Filed: May 20, 2011
For: U.S. Patent No. 7,429,899

: **DECISION**
: **GRANTING**
: **PETITION**

This is a decision on the third party requester's paper entitled "PETITION TO WAIVE PAGE LIMIT REQUIREMENT FOR THIRD PARTY REQUESTER COMMENTS" (the petition under 37 CFR 1.183), filed on October 26, 2011.

The third party requester petition is before the Office of Patent Legal Administration.

The petition under 37 CFR 1.183 is granted, for the reasons set forth herein.

BACKGROUND

1. On September 30, 2008, U.S. Patent Number 7,429,899 (the '899 patent) issued to Thaddeus J. Gabara with claims 1-37.

2. On May 20, 2011, a request for an *inter partes* reexamination of the '899 patent was deposited by a third party requester, which request was assigned Reexamination Control No. 95/001,628 (the '1628 proceeding).

3. On July 29, 2011, the Office issued an order granting *inter partes* reexamination of the '899 patent in the '1628 proceeding, concurrently with a non-final Office action.

4. On September 29, 2011, patent owner filed a response to the non-final Office action in the '1628 proceeding with an amendment to the claims, adding new claims 38-95.

5. On October 26, 2011, requester filed a comments submission, including a declaration under 37 CFR 1.132 by Linda Milor, Ph.D., concurrently with the instant petition under 37 CFR 1.183.

DECISION

I. Relevant Statutes, Regulations and Procedures

37 CFR 1.183 provides:

> In an extraordinary situation, when justice requires, any requirement of the regulations in this part which is not a requirement of the statutes may be suspended or waived by the Director or the Director's designee, *sua sponte*, or on petition of the interested party, subject to such other requirements as may be imposed. Any petition under this section must be accompanied by the petition fee set forth in § 1.17(f).

37 CFR 1.943(b) provides:

> Responses by the patent owner and written comments by the third party requester shall not exceed 50 pages in length, excluding amendments, appendices of claims, and reference materials such as prior art references.

II. Third Party Requester's October 26, 2011 Petition under 37 CFR 1.183

On October 26, 2011, third party requester filed the instant petition under 37 CFR 1.183, requesting waiver of 37 CFR 1.943(b) to permit entry of a comments submission of up to 100 pages.[1]

37 CFR 1.183 provides for suspension or waiver of any requirement of the regulations which is not a requirement of the statutes in an extraordinary situation, when justice requires, on petition of the interested party. The burden is on petitioner to set forth with specificity the facts that give rise to an extraordinary situation in which justice requires suspension of a rule. A showing which petitioner can make in support of a request for waiver of the 50-page limit of 37 CFR 1.943(b) can be an attempt to draft comments in compliance with the 50-page limit, and submission of resulting comments that are in excess of 50 pages concurrently with a petition under 37 CFR 1.183 for waiver of 37 CFR 1.943(b), requesting entry of the submitted comments. Such comments can be evaluated for economizing, extraneous material, and arrangement, without repetition of information already of record. In this way, petitioner can rely on the proposed comments: (1) for justification that more pages are needed to complete the comments, and (2) to set forth an accurate determination of exactly how many additional pages petitioner deems to be needed for the comments.

In support of waiver of the rule, requester asserts that "[i]n addition to responding to the rejections of the original 37 claims, the PO Remarks added 57 new claims."[2] In particular, requester asserts

---

[1] Third party requester petition under 37 CFR 1.183 at page 2, stating: "When combined with the comments and the declaration, the total number of pages being provided is 31 +10 +2 + 57 = 100 pages, which exceeds the 50 page limit by 50 pages."

[2] Id.at 1.

that 57 pages of new claim charts have been included with the comments submission and that "allowing the Third Party Requester to adequately respond to the patentability of each of the new claims and providing the explanation for the proposed rejections in a claim chart format will help the Examiner expedite the subsequent examination which is to be conducted with special dispatch in accordance with 37 C.F.R. § 1.937."[3] Additionally, requester asserts that "this petition to waive is in keeping with the substantial interest of justice, in that the Requester should have the opportunity to effectively address all of the issues raised by the PO Remarks and each of the 57 new claims."[4]

Additionally, requester has made a showing in support of the request for waiver of the 50-page limit of 37 CFR 1.943(b) by attempting to draft comments in compliance with the 50-page limit, and submitting the resulting comments, and accompanying declaration and claim charts, which in total exceed 50 pages. Requester asserts that "[i]t is further noted that the new claim charts continue to rely on the primary references and secondary references used in the rejection of the original claims and do not add new references."[5]

It is noted that, for purposes of making an accurate determination of exactly how many additional pages over 50 are deemed to be needed for the response, a document is deemed to be subject to the 50-page length requirement when the document includes legal argument, *i.e.*, arguments of counsel such as, *e.g.*, arguments that the claims are patentable or unpatentable, or that are directed to how an outstanding or proposed rejection is overcome, or, in the case of a document filed by the requester, how an outstanding or proposed rejection is supported. Each determination of whether a document, such as an affidavit or declaration, contains a legal argument that will cause the document to be subject to the page count is made on a case-by-case basis. In determining whether a document such as an affidavit or declaration under 37 CFR 1.132, or any other document of a submission, includes legal argument, the Office analyzes whether the document is providing factual evidence, *i.e.*, evidence of **technological facts,** or whether the document contains argument that is merely an extension of the arguments of counsel. Factual evidence includes, for example, declarations that swear behind the filing date of a reference, that establish the date of a printed publication, that provide a technical explanation or technical definition of terms of art used by a reference, or that provide comparative test results and a scientific, or technological, analysis of the results (*see, e.g.*, MPEP 716.02). If a document is limited to factual evidence, the document is not included in the page count. In addition, affidavits or declarations limited to establishing commercial success, long-felt need and failure of others, skepticism of experts, or copying, as per MPEP 716.03-716.06, respectively, will not be included in the page count.

In this instance, the October 26, 2011 comments submission includes 33 pages of remarks (excluding the certificate of service and list of exhibits) that count toward the regulatory page limit. The comments submission also includes three claim charts, comprising Exhibits EE, FF and GG drawn to new claims 38-95, up to 57 pages of which are counted toward the regulatory page limit. Additionally, the comments submission includes a declaration by Dr. Linda Milor (the Milor declaration). Based on the guidance set forth above, up to 10 pages of the Milor declaration are deemed to include legal argument (*e.g.*, as to the obviousness of the claims) and are also subject to

[3] Id. at 2.
[4] Id.
[5] Id. at 1-2.

the regulatory page limit count.[6] Thus, requester's October 26, 2011 comments submission exceeds the regulatory page limit by up to 50 pages.

Based on requester's showing in support of the request for waiver of the 50-page limit of 37 CFR 1.943(b) by attempting to draft comments in compliance with the 50-page limit and submitting the resulting comments (which are in excess of 50 pages), and the individual facts and circumstances of this case such as, for example, the 57 new claims added by patent owner, it is deemed equitable in this instance to waive the 50-page limit of 37 CFR 1.943(b) to the extent that third party requester's October 26, 2011 comments submission exceeds the regulatory page limit by up to 50 pages.

Accordingly, requester's October 26, 2011 petition under 37 CFR 1.183 is granted and the page limit of 37 CFR 1.943(b) is waived to the extent of permitting third party requester's October 26, 2011 comments submission to exceed the regulatory page limit by up to 50 pages. This waiver makes third party requester's October 26, 2011 comments submission page-length compliant.

CONCLUSION

1. Third party requester's October 26, 2011 petition under 37 CFR 1.183 is **granted** and the page limit of 37 CFR 1.943(b) is waived to the extent of permitting requester's October 26, 2011 comments submission to exceed the page limit by up to 50 pages. **This waiver makes requester's October 26, 2011 comments submission page-length compliant**.

2. Any questions concerning this communication should be directed to Maria Nuzzolillo, Legal Advisor, at (571) 272-8150 or Nicole D. Haines, Legal Advisor, at (571) 272-7717.

Pinchus M. Laufer
Senior Legal Advisor
Office of Patent Legal Administration

1-17-2012

[6] The Milor declaration includes Appendices 1-9. These appendices comprise prior art patents and literature, which, as set forth in the guidance provided above, do not count towards the regulatory page limit.

UNITED STATES PATENT AND TRADEMARK OFFICE

UNITED STATES DEPARTMENT OF COMMERCE
United States Patent and Trademark Office
Address: COMMISSIONER FOR PATENTS
P.O. Box 1450
Alexandria, Virginia 22313-1450
www.uspto.gov

APPLICATION NO.	FILING DATE	FIRST NAMED INVENTOR	ATTORNEY DOCKET NO.	CONFIRMATION NO.
95/001,629	06/06/2011	7714705	23273.001	8638

22442 7590 09/30/2011

SHERIDAN ROSS PC
1560 BROADWAY
SUITE 1200
DENVER, CO 80202

EXAMINER	
ART UNIT	PAPER NUMBER

DATE MAILED: 09/30/2011

Please find below and/or attached an Office communication concerning this application or proceeding.

UNITED STATES PATENT AND TRADEMARK OFFICE

Commissioner for Patents
United States Patents and Trademark Office
P.O.Box 1450
Alexandria, VA 22313-1450
www.uspto.gov

DO NOT USE IN PALM PRINTER

THIRD PARTY REQUESTER'S CORRESPONDENCE ADDRESS
PROSKAUER ROSE LLP
ONE INTERNATIONAL PLACE
BOSTON, MA 02110

Date:

MAILED

SEP 30 2011

CENTRAL REEXAMINATION UNIT

Transmittal of Communication to Third Party Requester
Inter Partes Reexamination

REEXAMINATION CONTROL NO. : 95001629
PATENT NO. : 7714705
TECHNOLOGY CENTER : 3999
ART UNIT : 3992

Enclosed is a copy of the latest communication from the United States Patent and Trademark Office in the above identified Reexamination proceeding. 37 CFR 1.903.

Prior to the filing of a Notice of Appeal, each time the patent owner responds to this communication, the third party requester of the inter partes reexamination may once file written comments within a period of 30 days from the date of service of the patent owner's response. This 30-day time period is statutory (35 U.S.C. 314(b)(2)), and, as such, it cannot be extended. See also 37 CFR 1.947.

If an ex parte reexamination has been merged with the inter partes reexamination, no responsive submission by any ex parte third party requester is permitted.

All correspondence relating to this inter partes reexamination proceeding should be directed to the Central Reexamination Unit at the mail, FAX, or hand-carry addresses given at the end of the communication enclosed with this transmittal.

UNITED STATES PATENT AND TRADEMARK OFFICE

Commissioner for Patents
United States Patent and Trademark Office
P.O. Box 1450
Alexandria, VA 22313-1450
www.uspto.gov

Douglas W. Swartz
Sheridan Ross P.C.
1560 Broadway
Suite 1200
Denver, CO 80202

(For Patent Owner)

MAILED

SEP 30 2011

CENTRAL REEXAMINATION UNIT

Joseph A. Capraro, Jr.
Proskauer Rose LLP
One International Place
Boston, Massachusetts 02110

(For Requester)

In re Rennie *et al*
Reexamination Proceeding
Control No. 95/001,629
For: U.S. Patent No. 7,714,705

: DECISION DENYING
: PETITION UNDER
: 37 CFR 1.181 AND
: 37 CFR 1.515(c)

This is a decision on the July 25, 2011 paper entitled "PETITION TO REVIEW REFUSAL TO ORDER *INTER PARTES* REEXAMINATION UNDER 37 CFR §§1.181 AND 1.927." No fee is required. The petition is before the Director of the Central Reexamination Unit for decision.

The petition is **denied** for the reasons set forth below.

REVIEW OF FACTS

1. U.S. Patent No. 7,714,705 (hereinafter, the '705 patent) issued on May 11, 2010 to Rennie *et al.*

2. On May 20, 2011, a request for *inter partes* reexamination of the '705 patent was deposited by a Third Party Requester, and was assigned Control No. 95/001,629 (hereinafter, the '1629 proceeding).

3. On May 27, 2011, a notice of failure to comply with *inter partes* reexamination request filing requirements was mailed.

4. On June 6, 2011, the instant corrected request for *inter partes* reexamination of the '705 patent was deposited by a Third Party Requester and was assigned a filing date.

5. An order denying the request for *inter partes* reexamination was mailed on June 24, 2011. The order did not find that a Substantial New Question (SNQ) of Patentability was raised for any of the requested claims.

6. On July 25, 2011, the present petition was filed.

DECISION

Third party requester ("Petitioner") in the '1629 proceeding has petitioned seeking relief from the Examiner's June 24, 2011 Order denying *inter partes* reexamination for all requested claims.

I. Standard of Review

37 CFR 1.927 and 1.181 provide for the filing of a petition to review an examiner's determination refusing to order *inter partes* reexamination. The CRU Director's review of the reexamination request on petition is *de novo*. Therefore, this review will determine whether the examiner's refusal to order reexamination for patent claims 1-50 was correct.

The following rules and procedures are applicable to this review:

> 35 U.S.C. § 312(c) provides:
>
> A determination by the Director under subsection (a) shall be final and non-appealable. Upon a determination that no substantial new question of patentability has been raised, the Director may refund a portion of the inter partes reexamination fee required under section 311.
>
> 37 CFR § 1.927 provides:
>
> The third party requester may seek review by a petition to the Director under § 1.181within one month of the mailing date of the examiner's determination refusing to order inter partes reexamination. Any such petition must comply with § 1.181(b). If no petition is timely filed or if the decision on petition affirms that no substantial new question of patentability has been raised, the determination shall be final and nonappealable.
>
> MPEP § 2648 provides, in pertinent part:

> Once a request for inter partes reexamination has been denied, jurisdiction over the reexamination proceeding is retained by the Central Reexamination Unit (CRU) to await any petition seeking review of the examiner's determination refusing reexamination. If no petition is filed within one (1) month, the CRU will process the reexamination as a concluded reexamination file. See MPEP § 2647 and § 2694. If a petition is timely filed, the petition (together with the reexamination file) is forwarded to the office of the CRU Director for decision. The CRU Director will then review the examiner's determination that a substantial new question of patentability has not been raised. The CRU Director's review will be de novo.
>
> MPEP § 2642 provides, in pertinent part:
>
> For "a substantial new question of patentability" to be present, it is only necessary that: (A) the prior art patents and/or printed publications raise a substantial question of patentability regarding at least one claim, i.e., the teaching of the (prior art) patents and printed publications is such that a reasonable examiner would consider the teaching to be important in deciding whether or not the claim is patentable; and (B) the same question of patentability as to the claim has not been decided by the Office in a previous examination or pending reexamination of the patent or in a final holding of invalidity by the Federal Courts in a decision on the merits involving the claim.

II. Summary of the Prosecution and Reexamination History of the '705 Patent

The '705 patent issued on May 11, 2010 to Rennie *et al* from an application filed March 11, 2008. The '705 patent application was a continuation of an earlier filed application that claimed priority to February 25, 2005. Prior to the first office action, three preliminary amendments were submitted. The first preliminary amendment canceled original claims 1-21 and added new claims 22-50. The second preliminary amendment added new claims 51 and 52. The third preliminary amendment added new claims 53-57 and amended claims 22-23, 29, 32, 35, 38, 40, and 50.

Claims 22-57 were rejected in the first office action mailed on July 22, 2009. In response, the Applicant canceled claims 22-57 and added new claims 58-107. On March 19, 2010, a notice of allowance was issued including an Examiner's Amendment. Each of the independent claims was amended. The amendment to claim 58 is representative and added the following features:

> "wherein the operator instruction to the selected snow maintenance truck operator comprises one or more of a dispatch command, an alarm based on a temporal trend in weather conditions, an alarm based on a difference in weather conditions, an alarm based on a temporal trend in road conditions, an alarm based on a difference in road conditions, a snow plow setting, a mixture of materials being applied to a road surface, and an amount of materials being applied to the road surface." *Claim 58.*

The Examiner then stated the reasons for allowance as follows:

> "With regards to independent claims 58, 70, 83, 91 and 99, the prior art does not specifically disclose or suggest a method and/or system comprises providing (a) instruction to the snow maintenance truck' operator comprising one or more of a dispatch command, snow plow setting, a mixture of materials being applied to a road surface, and amount of materials being applied to the road surface, etc. and in combination in view of the server, the map display in snow maintenance, the wireless cellular wireless network as recited in claims 58, 70, 83, 91 and 99." *See Notice of Allowance at Page 14.*

III. *De Novo* Review of the Request for Reexamination

In accordance with the requirements of the reexamination statute and rules, a review of the record as it appeared before the Examiner at the time of the order has been undertaken prior to the preparation of this decision. A de novo determination, has been made as to whether the June 6, 2011 request for *inter partes* reexamination raises at least one substantial new question of patentability (hereinafter "SNQ"). This review will focus on the correctness of the ultimate decision to grant or deny reexamination and will not review specific findings in the order denying reexamination.

For the reasons set forth below, the request for *inter partes* reexamination of the '705 patent filed in the '1629 reexamination proceeding has not been found to present an SNQ over claims 1-50. Therefore, the examiner's decision to deny reexamination is proper.

Petitioner asserts that the CTRE documents (CTRE Phase I, II, III, and IV) raise a SNQ over claims 1-50 by teaching (as interpreted by one of ordinary skill in the art) the distinguishing feature of "providing a map or instruction to the snow maintenance truck operator comprising one or more of a dispatch command, snow plow setting, a mixture of materials being applied to a road surface, and amount of materials being applied to the road surface over a wireless cellular network." *see Petition received July 25, 2011 at 7.*

The Petition's position is summarized as follows:

> "Requestor believes that the cited references teach or at least suggest providing both (1) an instruction to the snow maintenance truck operator (comprising one or more of a dispatch command, snow plow setting, a mixture of materials being applied to a road surface, and amount of materials being applied to the road surface) over a wireless cellular network and (2) providing a map over a wireless cellular network. More specifically, Requestor submits that cited references (interpreted by one of ordinary skill in the art) teach or suggest that only the snow maintenance truck operator could implement the decisions relating to operations that had been determined to be appropriate by a remote management facility and that such decisions are communicated by the remote management facility to the truck operators to implement such decisions. Moreover, the cited references teach or suggest that these two-way communications (via

> cellular or radio communications systems) between truck operators and the management facility occur in real time since weather and road conditions may change with time, thus necessitating the modification of recommended instructions. The cited methods teach (explicitly or inherently) or at least suggest that such decisions would be communicated over the same communication links (i.e., cellular or radio communications systems) used to originally transfer data to the management facility. Finally, these references teach (explicitly or inherently) or at least suggest that communication over the same communication links of graphical data, in the form of an area-specific map, would assist the truck operator in carrying out the instructions generated by the remote management facility." *Petition received 7/25/2011 at 7,*
>
> "Again, (1) only the truck operator could implement the decisions relating to truck operation which had been determined to be appropriate by DOT management based on their analysis; (2) such decisions should be communicated by DOT management to the truck operators in order for the truck operators to implement such decisions; (3) such communications should be in real time since weather and road conditions may change with time, thus modifying the recommended instructions, and (4) the obvious method to communicate such decisions would be over the same communication links (i.e., cellular or radio communications systems) used to originally transfer data to DOT management. And the transfer of the area-specific map in the same manner would assist the truck operator in carrying out the instructions generated by DOT management. Without these actions, it is apparent, the objectives of CTRE and state DOTs for the overall project could not be achieved. Without these actions, the entire exercise would be merely academic."

As can be seen above, the Petition takes the position that the references teach providing a map or instruction because "such decisions *should* be communicated by DOT management to the truck operators in order for the truck operators to implement such decisions; (3) such communications should be in real time since weather and road conditions may change with time, thus modifying the recommended instructions, and (4) the obvious method to communicate such decisions would be over the same communication links (i.e., cellular or radio communications systems) used to originally transfer data to DOT management" (*emphasis added*). However, the Petition does not cite to a single portion of the references which specifically detail the step of "providing a map or instruction to the snow maintenance truck operator."

Similarly, the Request does not cite to a single portion of the references which specifically detail the distinguishing feature of "providing a map or instruction to the snow maintenance truck operator." Beginning first with CTRE Phase IV, the Request states:

> "CTRE Phase IV, which was not provided or considered during the original prosecution of the '705 Patent before the Office, describes a prototype "highway maintenance concept truck" that included an "onboard computer" that interfaced with "Pavement Friction," "Air-Pavement Temperature," and "Pavement Freezing Point" sensors, a GPS truck locator, and a "Materials Application" control block. (CTRE Phase IV at Figure 6). The

> onboard computer communicated over a wireless communications network, via wireless modems, with a central server. (CTRE Phase IV at Figure 6). The wireless modem in the truck cab is wired to other in-cab components, allowing wireless communication with the central server. A "Decision Support System" communicated with the server and contained logic for receiving field data and generating maintenance decisions, in the form of instructions and comments. (CTRE Phase IV at Figure 6). The prototype trucks included GPS devices in the truck, sensors for collecting weather and road condition data and communicating that information via a wireless interface to a central command for making efficient dispatch and control decisions for trucks which are uniquely identified in software (rather than using the IP address of the wireless modem as the unique identifier). (CTRE Phase IV at Figure 6, p. 56)." *Request for Reexamination at Page 58.*
>
> Based on the collected data and the physical location of the fleet of snow maintenance trucks, maintenance decisions can be made and, necessarily, instructions can be sent to truck operators or remote-control instructions to efficiently utilize deployed snow-fighting resources or automatically apply materials to the roadways (CTRE Phase IV at Figure 6 - "Decision Processing" block). The prototype system included a "mapping module" for graphically displaying the location of the truck. (CTRE Phase IV at 73). CTRE Phase IV suggests communicating the map to maintenance supervisors coordinating the fleet of maintenance trucks while in a truck in the field and it would have been obvious to one of ordinary skill in the art to use the "decision support" to actually implement instructions in the field. (CTRE Phase IV at 41, 62 & 78). Additional description of the CTRE Phase IV research and prototype trucks can be found in Exhibit CC-1, which is incorporated herein by reference." *Request for Reexamination at Pages 59-60.*

As the Requester correctly notes in the passage above, CTRE Phase IV clearly describes the sending of sensor data from the snow plow truck over a wireless communications network to a central server and decisions being made based upon the received data (*CTRE Phase IV, Page 13 - Figure 6).* However, none of the portions of CTRE Phase IV cited by Requester including Figure 6 and Pages 41, 62, 73, and 78 teach or suggest the sending of an instruction or a map from the central server to the snow plow truck.

At most, CTRE Phase IV shows a real time communications system interposed between the snow plow truck and the central server for sending sensor data to the central server. In fact, Figure 6 which the Requester relies upon when stating "maintenance decisions can be made and, necessarily, instructions can be sent to truck operators or remote-control instructions to efficiently utilize deployed snow-fighting resources or automatically apply materials to the roadways" is clearly noted as only describing "the data communications from the roadside to the desk side" (*see CTRE Phase IV at Page 13).* CTRE Phase IV never states or even suggests that instructions flow from the server to the snow plow truck. CTRE Phase IV only discusses the flow of sensor data information from the snow plow truck to the server.

Petitioner's position is essentially that while CTRE Phase IV may not specifically state that operator instructions are sent from the server to the snow plow truck, "a common sense reading" of the reference leads to the conclusion that such a step is inherent or implied (*see Petition received 7/25/2011 at pages 22-23 and 44-45).* The petition states:

> "The present PTO communication would suggest that the three Network Diagrams do not explicitly indicate what the results of the decision processing" actually are, nor do they indicate how they are used in the overall system. The Requestor disagrees. The results of the decision processing" would, of course, include operator instructions with regard to responding to the weather and road conditions at the site of the maintenance truck. And since the operator is the only one in position to carry out such instructions (indeed, the only DOT employee who moves any significant amount of snow), such instructions must be transmitted by to the maintenance truck in real time in order that they be implemented. Requestor believes this is a common sense reading of the references for one of ordinary skill." *Petition received 7/25/2011 at Pages 22-23.*

Petitioner's argument is unpersuasive because the determination of whether a SNQ is raised by a particular reference must focus upon the teachings of the reference itself. The Federal Circuit notes the following regarding inherency:

> "To establish inherency, the extrinsic evidence must make clear that the missing descriptive matter is necessarily present in the thing described in the reference, and that it would be so recognized by persons of ordinary skill. Inherency, however, may not be established by probabilities or possibilities. The mere fact that a certain thing may result from a given set of circumstances is not sufficient.' " *In re Robertson, 169 F.3d 743, 745, 49 USPQ2d 1949, 1950-51 (Fed. Cir. 1999).*

In this case, CTRE Phase IV does not explicitly, inherently or implicitly teach the providing of a map or instruction from the server to the snow plow truck. While it is agreed that the feature of providing an instruction or map to the snow plow truck from the server could be an obvious next step in the development of the CTRE system, the Request cannot establish a SNQ by merely asserting that this claim feature must or should be present in a reference. Evidence must be presented to make clear that the missing element is necessarily present in the reference. In this case, the evidence does not make clear that the step of providing an instruction or a map is necessarily present in CTRE Phase IV. Accordingly, CTRE Phase IV does not raise a SNQ over claims 1-50.

Turning to CTRE Phases I, II, and III, the cited references similarly do not disclose providing a map or instruction to the snow maintenance truck operator. The Request states:

> "CTRE Phase I discloses that a snow maintenance truck can video cameras to record video images of the snow maintenance truck's exterior environment: "Computers, video cameras, and sensors could monitor vital signs of the major truck components and the ancillary snowplow equipment." CTRE Phase I at page xxi.

> CTRE Phases II-III disclose other ideas in the art in the late 1990's and early 2000's. For example, CTRE Phase II discloses the use of mobile data terminals" (i.e., pen based computers) in trucks for collecting information and truck location information (via GPS), displaying information to the truck operator, and wirelessly transmitting the data to a remote server. Thus, CTRE Phases II-III are relevant at least to the "touch screen monitor" limitations of claims l, 13, 26, and 34. CTRE Phases II-III are also relevant to the "weather condition" and "road condition" limitations of claims 1, 13, 26, 34, and 42." *Request for Reexamination at Pages 61-62.*

Just as noted above with CTRE Phase IV, the CTRE Phase I, II, and III references describe the sending of sensor data from the snow plow truck over a wireless communications network to a central server and decisions being made based upon the received data. However, none of the cited portions of CTRE Phase I, II, and III teach or suggest the sending of an instruction or a map from the central server to the snow plow truck.

Accordingly, the petition is **denied**.

SUMMARY AND CONCLUSION

1. Based on a de novo review of the record as a whole, the petition is **DENIED**.

2. This decision is without prejudice to the right of the requester to file a new request for reexamination. The new request must set forth a substantial new question of patentability that is different from the substantial new question of patentability set forth in the prior examinations.

4. This decision is final and nonappealable. See 35 U.S.C. 312(c) and 37 CFR 1.927. No further communication on this matter will be acknowledged or considered.

Irem Yucel, Director
Central Reexamination Unit

UNITED STATES PATENT AND TRADEMARK OFFICE

UNITED STATES DEPARTMENT OF COMMERCE
United States Patent and Trademark Office
Address: COMMISSIONER FOR PATENTS
P.O. Box 1450
Alexandria, Virginia 22313-1450
www.uspto.gov

APPLICATION NO.	FILING DATE	FIRST NAMED INVENTOR	ATTORNEY DOCKET NO.	CONFIRMATION NO.
95/001,630	05/20/2011	7890648	167162800700	8708

58417 7590 01/12/2012

HEINZ GRETHER PC
G2 Technology Law
P.O. Box 202858
AUSTIN, TX 78720

EXAMINER	
ART UNIT	PAPER NUMBER

DATE MAILED: 01/12/2012

Please find below and/or attached an Office communication concerning this application or proceeding.

UNITED STATES PATENT AND TRADEMARK OFFICE

Commissioner for Patents
United States Patent and Trademark Office
P.O. Box 1450
Alexandria, VA 22313-1450
www.uspto.gov

DO NOT USE IN PALM PRINTER

(THIRD PARTY REQUESTER'S CORRESPONDENCE ADDRESS)

Morrison & Foester, LLP
555 West Fifth Street
Suite 3500
Los Angeles, CA 90013-1024

EX PARTE REEXAMINATION COMMUNICATION TRANSMITTAL FORM

REEXAMINATION CONTROL NO. *95/001,630*.

PATENT NO. *7890648*.

ART UNIT *3992*.

Enclosed is a copy of the latest communication from the United States Patent and Trademark Office in the above identified *ex parte* reexamination proceeding (37 CFR 1.550(f)).

Where this copy is supplied after the reply by requester, 37 CFR 1.535, or the time for filing a reply has passed, no submission on behalf of the *ex parte* reexamination requester will be acknowledged or considered (37 CFR 1.550(g)).

UNITED STATES PATENT AND TRADEMARK OFFICE

Commissioner for Patents
United States Patent and Trademark Office
P.O. Box 1450
Alexandria, VA 22313-1450
www.uspto.gov

Heinz Grether PC
G2 Technology Law
P.O. Box 202858
Austin, TX 78720

(For Patent Owner)

MAILED

JAN 12 2012

CENTRAL REEXAMINATION UN

Morrison & Foerster, LLP
555 West Fifth Street
Suite 3500
Los Angeles, CA 90013-1024

(For Third Party Requester)

Inter Partes Reexamination Proceeding
Control No. 95/001,630
Filed: May 20, 2011
For: U.S. Patent No. 7,890,648 B2

DECISION
DISMISSING
PETITION

This is a decision on the October 31, 2011 third party requesters' (hereinafter "requester") petition paper entitled "THIRD PARTY REQUESTERS' PETITION PURSUANT TO 37 C.F.R. §1.183 TO WAIVE THE PAGE COUNT LIMIT OF 37 C.F.R. § 1.943(b)."

The petition is before the Office of Patent Legal Administration for decision.

The petition is **dismissed as moot**, for the reasons set forth below.

DECISION

In the instant petition, the third party requester requests waiver of the page limit requirement of 37 CFR 1.943(b) for its comments submission filed on October 31, 2011.

On January 6, 2012, the Office mailed a Notice of Defective Paper stating that patent owner's September 30, 2011 response to the July 6, 2011 non-final Office action is defective and setting a time period of one (1) month or thirty (30) days, whichever is longer, for the patent owner to file a corrected response submission.

Pursuant to MPEP § 2667(I)(A)(2), "Any previously submitted third party comments in response to [the] improper patent owner submission would also not be considered, as being moot, since the patent owner did not in fact respond to the Office action in accordance with the rules. If a response to the Notice is received, then under 37 CFR 1.947, the third party requester may once file written comments, limited to issues raised by the Office action or the patent owner's

response to the Notice, within 30 days from the date of service of the patent owner's response to the Notice."

Since a proper response submission to the non-final Office action from the patent owner has not been made, the third party requester will have the opportunity to file new comments within 30 days of service of a corrected patent owner response submission.

Accordingly, the third party requester's October 31, 2011 petition requesting waiver of 37 CFR 1.943(b) for its October 31, 2011 comments submission is moot, and the third party requester's October 31, 2011 petition is dismissed as moot.

CONCLUSION

1. The third party requester's October 31, 2011 petition paper entitled "THIRD PARTY REQUESTERS' PETITION PURSUANT TO 37 C.F.R. §1.183 TO WAIVE THE PAGE COUNT LIMIT OF 37 C.F.R. § 1.943(b)" is dismissed as moot.

2. Telephone inquiries with regard to this decision should be directed to Susy Tsang-Foster, Legal Advisor, at (571) 272-7711.

Pinchus M. Laufer
Senior Legal Advisor
Office of Patent Legal Administration

01-11-2012

UNITED STATES PATENT AND TRADEMARK OFFICE

UNITED STATES DEPARTMENT OF COMMERCE
United States Patent and Trademark Office
Address: COMMISSIONER FOR PATENTS
P.O. Box 1450
Alexandria, Virginia 22313-1450
www.uspto.gov

APPLICATION NO.	FILING DATE	FIRST NAMED INVENTOR	ATTORNEY DOCKET NO.	CONFIRMATION NO.
95/001,630	05/20/2011	7890648	167162800700	8708

58417 7590 01/26/2012

HEINZ GRETHER PC
G2 Technology Law
P.O. Box 202858
AUSTIN, TX 78720

EXAMINER	
ART UNIT	PAPER NUMBER

DATE MAILED: 01/26/2012

Please find below and/or attached an Office communication concerning this application or proceeding.

UNITED STATES PATENT AND TRADEMARK OFFICE

Commissioner for Patents
United States Patents and Trademark Office
P.O.Box 1450
Alexandria, VA 22313-1450
www.uspto.gov

DO NOT USE IN PALM PRINTER

THIRD PARTY REQUESTER'S CORRESPONDENCE ADDRESS
MORRISON & FOESTER, LLP
555 WEST FIFTH STREET
SUITE 3500
LOS ANGELES, CA 90013-1024

Date: **MAILED**

JAN 26 2012

CENTRAL REEXAMINATION UNIT

Transmittal of Communication to Third Party Requester
Inter Partes Reexamination

REEXAMINATION CONTROL NO. : 95001630
PATENT NO. : 7890648
TECHNOLOGY CENTER : 3999
ART UNIT : 3992

Enclosed is a copy of the latest communication from the United States Patent and Trademark Office in the above identified Reexamination proceeding. 37 CFR 1.903.

Prior to the filing of a Notice of Appeal, each time the patent owner responds to this communication, the third party requester of the inter partes reexamination may once file written comments within a period of 30 days from the date of service of the patent owner's response. This 30-day time period is statutory (35 U.S.C. 314(b)(2)), and, as such, it cannot be extended. See also 37 CFR 1.947.

If an ex parte reexamination has been merged with the inter partes reexamination, no responsive submission by any ex parte third party requester is permitted.

All correspondence relating to this inter partes reexamination proceeding should be directed to the Central Reexamination Unit at the mail, FAX, or hand-carry addresses given at the end of the communication enclosed with this transmittal.

Decision on Petition for Extension of Time in Reexamination	95/001,630

1. THIS IS A DECISION ON THE PETITION FILED: 14 January 2012 .

2. THIS DECISION IS ISSUED PURSUANT TO:
   A. ☐ 37 CFR 1.550(c) – The time for taking any action by a patent owner in an *ex parte* reexamination proceeding will be extended only for sufficient cause and for a reasonable time specified.
   B. ☒ 37 CFR 1.956 – The time for taking any action by a patent owner in an *inter partes* reexamination proceeding will be extended only for sufficient cause and for a reasonable time specified.
   The petition is before the Central Reexamination Unit for consideration.

3. FORMAL MATTERS
   Patent owner requests that the period for responding to the Office action dated 06 January 2012 which sets a thirty (30) day period for filing a response to the Office action, be extended by one (1) month.

   A. ☒ Petition fee per 37 CFR §1.17(g)):
      i. ☐ Petition includes authorization to debit a deposit account.
      ii. ☐ Petition includes authorization to charge a credit card account.
      iii. ☐ Other: _____.
   B. ☒ Proper certificate of service was provided. (Not required in reexamination where patent owner is requester.)
   C. ☒ Petition was timely filed.
   D. ☒ Petition properly signed.

4. DECISION (See MPEP 2265 and 2665)
   A. ☐ Granted or ☐ Granted-in-part for _____, because petitioner provided a factual accounting that established sufficient cause. (See 37 CFR 1.550(c) and 37 CFR 1.956).
   B. ☐ Other/comment: see attached
   C. ☒ Dismissed because:
      i. ☐ Formal matters (See unchecked box(es) (A, B, C and/or D) in section 4 above).
      ii. ☐ Petitioner failed to provide a factual accounting of reasonably diligent behavior by all those responsible for preparing a response to the outstanding Office action within the statutory time period.
      iii. ☐ Petitioner failed to explain why, in spite of the action taken thus far, the requested additional time is needed.
      iv. ☒ The statements provided fail to establish sufficient cause to warrant extension of the time for taking action (See attached).
      v. ☐ The petition is moot.
      vi. ☒ Other/comment: see attached

5. CONCLUSION

   Telephone inquiries with regard to this decision should be directed to Mark Reinhart at 571-272-1611. In his/her absence, calls may be directed to Sudhanshu C Pathak at 571-272-5509 in the Central Reexamination Unit.

/Mark Reinhart/	SPRS, AU 3992 Central Reexamination Unit
[*Signature*]	(Title)

In consideration of providing the patent owner with a fair opportunity to present an argument against any attack on the patent as balanced with the statutory mandate of conducting reexamination proceedings with special dispatch that the Office must fully consider the facts presented in any petitions for extension of time. The petition speaks to the considerations of a Notice of Defective Paper and a concurrent petition filed under 37 CFR 1.181. The time sought appears to be sought awaiting a decision on the petition filed under 37 CFR 1.181. The mere filing of a petition does not stay a proceeding. Extensions of time filed under 37 CFR § 1.956 are granted only for "sufficient cause." In the instant petition, the time sought is to await a decision in the 181 petition which is not considered to provide support for "sufficient cause."

On balance there is not "sufficient cause" for granting an extension of time.

The petition for extension of time is hereby dismissed.

UNITED STATES PATENT AND TRADEMARK OFFICE

UNITED STATES DEPARTMENT OF COMMERCE
United States Patent and Trademark Office
Address: COMMISSIONER FOR PATENTS
P.O. Box 1450
Alexandria, Virginia 22313-1450
www.uspto.gov

APPLICATION NO.	FILING DATE	FIRST NAMED INVENTOR	ATTORNEY DOCKET NO.	CONFIRMATION NO.
95/001,632	05/24/2011	6,285,945	RI3141561-632	1897

40401 7590 03/13/2012

Hershkovitz & Associates, LLC
2845 Duke Street
Alexandria, VA 22314

EXAMINER

ART UNIT	PAPER NUMBER

DATE MAILED: 03/13/2012

Please find below and/or attached an Office communication concerning this application or proceeding.

UNITED STATES PATENT AND TRADEMARK OFFICE

Commissioner for Patents
United States Patents and Trademark Office
P.O.Box 1450
Alexandria, VA 22313-1450
www.uspto.gov

DO NOT USE IN PALM PRINTER

THIRD PARTY REQUESTER'S CORRESPONDENCE ADDRESS
KENYON & KENYON LLP
ONE BROADWAY
NEW YORK, NY 10004

Date:
MAILED
MAR 13 2012
CENTRAL REEXAMINATION UNIT

Transmittal of Communication to Third Party Requester
Inter Partes Reexamination

REEXAMINATION CONTROL NO. : 95001632
PATENT NO. : 6285945
TECHNOLOGY CENTER : 3999
ART UNIT : 3993

Enclosed is a copy of the latest communication from the United States Patent and Trademark Office in the above identified Reexamination proceeding. 37 CFR 1.903.

Prior to the filing of a Notice of Appeal, each time the patent owner responds to this communication, the third party requester of the inter partes reexamination may once file written comments within a period of 30 days from the date of service of the patent owner's response. This 30-day time period is statutory (35 U.S.C. 314(b)(2)), and, as such, it cannot be extended. See also 37 CFR 1.947.

If an ex parte reexamination has been merged with the inter partes reexamination, no responsive submission by any ex parte third party requester is permitted.

All correspondence relating to this inter partes reexamination proceeding should be directed to the Central Reexamination Unit at the mail, FAX, or hand-carry addresses given at the end of the communication enclosed with this transmittal.

UNITED STATES PATENT AND TRADEMARK OFFICE

Commissioner for Patents
United States Patent and Trademark Office
P.O. Box 1450
Alexandria, VA 22313-1450
www.uspto.gov

Hershkovitz & Associates, LLC
2845 Duke Street
Alexandria, VA 22314

(For Patent Owner)

MAILED

MAR 13 2012

CENTRAL REEXAMINATION UNIT

Kenyon & Kenyon
One Broadway
New York, NY 10004

(For Third Party Requester)

In re Sielagoski, *et al.*
Reexamination Proceeding
Control No.: 95/001,632
Filed: May 24, 2011
For: U.S. Patent No.: 6,285,945

: DECISION DISMISSING
: 37 CFR §1.181
: PETITION

This is a decision on the August 2, 2011 Patent Owner petition under 37 CFR 1.181 entitled "PATENT OWNER'S PETITION TO VACATE REEXAMINATION ORDER UNDER 37 CFR §§§ 1.181, 1.907 AND 1.915(b)(8)".

The petition is before the Office of Patent Legal Administration for consideration.

The August 2, 2011 Patent Owner petition under 37 CFR 1.181 is dismissed.

RELEVANT BACKGROUND

1. On September 4, 2001, U.S. Patent No. 6,285,945 (the '945 patent) issued to Sielagoski, *et al.* with 14 claims.

2. On May 24, 2011, a request for *inter partes* reexamination of the '945 patent was deposited by a third party requester, which request was assigned Reexamination Control No. 95/001,632 (the '1632 proceedings). The request sets forth the real party in interest as Volkswagen Group of America, Inc.,[1] and notes a concurrent proceeding that identifies Copending litigation STRAGENT, LLC *et al.* v. AUDI AG *et al.*, Case No. 6:10-cv-00227-LED (E.D. Tex.).

[1] *Id.*, at page 1, paragraph 2b.

3. On June 18, 2011, the Office mailed an order granting re-examination of claims 1-14 of the '945 patent and concurrently mailed a first Office action in the '1632 proceeding.

4. On August 2, 2011, Patent Owner filed the instant petition entitled "PATENT OWNER'S PETITION TO VACATE REEXAMINATION ORDER UNDER 37 CFR §§§ 1.181, 1.907 AND 1.915(b)(8)".

DECISION

I. Relevant Statutes, Regulations and Procedures

35 U.S.C. § 317 Inter partes reexamination prohibited.

(a) ORDER FOR REEXAMINATION.— Notwithstanding any provision of this chapter, once an order for inter partes reexamination of a patent has been issued under section 313, neither the third-party requester nor its privies may file a subsequent request for inter partes reexamination of the patent until an inter partes reexamination certificate is issued and published under section 316, unless authorized by the Director.

(b) FINAL DECISION.— Once a final decision has been entered against a party in a civil action arising in whole or in part under section 1338 of title 28, that the party has not sustained its burden of proving the invalidity of any patent claim in suit or if a final decision in an inter partes reexamination proceeding instituted by a third-party requester is favorable to the patentability of any original or proposed amended or new claim of the patent, then neither that party nor its privies may thereafter request an inter partes reexamination of any such patent claim on the basis of issues which that party or its privies raised or could have raised in such civil action or inter partes reexamination proceeding, and an inter partes reexamination requested by that party or its privies on the basis of such issues may not thereafter be maintained by the Office, notwithstanding any other provision of this chapter. This subsection does not prevent the assertion of invalidity based on newly discovered prior art unavailable to the third-party requester and the Patent and Trademark Office at the time of the inter partes reexamination proceedings.

37 CFR 1.907 *Inter Partes* reexamination prohibited.

(a) Once an order to reexamine has been issued under § 1.931, neither the third party requester, nor its privies, may file a subsequent request for *inter partes* reexamination of the patent until an *inter partes* reexamination certificate is issued under § 1.997, unless authorized by the Director.

(b) Once a final decision has been entered against a party in a civil action arising in whole or in part under 28 U.S.C. 1338 that the party has not sustained its burden of proving invalidity of any patent claim-in-suit, then neither that

party nor its privies may thereafter request *inter partes* reexamination of any such patent claim on the basis of issues which that party, or its privies, raised or could have raised in such civil action, and an *inter partes* reexamination requested by that party, or its privies, on the basis of such issues may not thereafter be maintained by the Office.

(c) If a final decision in an *inter partes* reexamination proceeding instituted by a third party requester is favorable to patentability of any original, proposed amended, or new claims of the *patent*, then neither that party nor its privies may thereafter request *inter partes* reexamination of any such patent claims on the basis of issues which that party, or its privies, raised or could have raised in such *inter partes* reexamination proceeding.

37 CFR 1.913 Persons eligible to file request for *inter partes* reexamination.

Except as provided for in § 1.907, any person other than the patent owner or its privies may, at any time during the period of enforceability of a patent which issued from an original application filed in the United States on or after November 29, 1999, file a request for *inter partes* reexamination by the Office of any claim of the patent on the basis of prior art patents or printed publications cited under § 1.501.

37 CFR 1.915 Content of request for *inter partes* reexamination.

(b) A request for *inter* partes reexamination must include the following parts:

(7) A certification by the third party requester that the estoppel provisions of § 1.907 do not prohibit the inter partes reexamination.

(8) A statement identifying the real party in interest to the extent necessary for a subsequent person filing an *inter partes* reexamination request to determine whether that person is a privy.

...

(d) If *the inter partes* request does not include the fee for requesting *inter partes* reexamination required by paragraph (a) of this section and meet all the requirements of paragraph (b) of this section, then the person identified as requesting *inter partes* reexamination will be so notified and will generally be given an opportunity to complete the request within a specified time. Failure to comply with the notice will result in the *inter partes* reexamination request not being granted a filing date, and will result in placement of the request in the patent file as a citation if it complies with the requirements of § 1.501.

MPEP § 2614 Content of Request for *Inter Partes* Reexamination

The reexamination request must identify the real party in interest who is responsible for filing the reexamination request. This information will be used by future parties requesting reexamination of the same patent, in making the certifications required by 37 CFR 1.915(b)(8).

II. Patent Owner's Petition Under 37 CFR 1.181 for Vacatur

Patent Owner states that the order of re-examination for claims 1-14 of the '945 patent "was an *ultra vires* act by the Office that was not authorized by and is contrary to the Office's Rules and the MPEP"[2]. Patent Owner further states that the June 18, 2011 Order granting the request for *inter partes* re-examination should be vacated.[3] Petitioner asserts that "Requester fails to identify or cloaks the real party(ies) in interest in the request."[4] Patent owner states that a first action for patent infringement against "Defendants Audi AG, Volkswagen Group of America, Inc. Volkswagen AG, Bayerische Motoren Werke Ag, BMW of North America, LLC, BMW Manufacturing Co., LLC, Mercedes-Benz USA LLC, Mercedes-Benz US International, Inc. Daimler North America Corporation, Daimler AG, Nissan Motor Co., Ltd., and Nissan North America, Inc."[5]

Patent owner notes that the requester stated that the "real party in interest is VOLKSWAGEN GROUP OF AMERICA, INC. which is a subsidiary of VOLKSWAGEN AG"[6]. Patent owner states that "Requester did not identify AUDI AG , one of the defendants in the related litigation, as the real party in interest"[7] . Patent owner further states that requester failed to identify "VOLKSWAGEN AG" as a real party in interest" and fails to identify other defendants "Bayerische Motoren Werke Ag, BMW of North America, LLC, BMW Manufacturing Co., LLC, Mercedes-Benz USA LLC, Mercedes-Benz US International, Inc. Daimler North America Corporation, Daimler AG, Nissan Motor Co., Ltd., and Nissan North America, Inc."[8] as real parties in interest.

III. DISCUSSION

The § 1.181 petition by patent owner seeking vacatur of the *inter partes* reexamination based on the failure to name AUDI AG, VOLKSWAGEN AG, Bayerishe Motoren Werke AG, BMW of North America, LLC, Daimler North America Corporation, Daimler AG, Nissan Motor CO., Ltd., and Nissan North America, Inc.[9] as real party in interest is dismissed.

The MPEP[10] makes clear that the Office does not look beyond the required certification in the request for reexamination, except for the rare instance where a

---

[2] Petition under 37 CFR 1.181 at page 1.
[3] Petition at page 5.
[4] Petition at pages 3-4.
[5] Petition at page 2.
[6] Petition at page 2.
[7] Petition at page 4.
[8] Petition at page 5.
[9] Petition at pages 4-5.
[10] MPEP § 2612 states in part: 37 CFR 1.907 defines specific situations where a third party is prohibited from filing a request for an *inter partes* reexamination. 37 CFR 1.915(b)(7) requires the third party requester to certify that the estoppel provisions of 37 CFR 1.907 do not prohibit the filing of the *inter partes* reexamination request by the real party in interest (note that it is the real party in interest that is subject to the estoppel provi-

challenge to the sufficiency of the certification facially establishes that the identified real party in interest is not accurate. The certification cannot be successfully challenged merely because, at one point, the certified real party in interest was "involved" with another party, or there was some collaboration in a matter other than the request for reexamination.

The common interest among litigation defendants seeking to invalidate or defend against enforcement of a patent, such as in the litigation identified by Patent Owner[11], does not translate *ipso facto* into each defendant being a real party in interest where a request for reexamination is filed by only one of the defendants in the litigation. This is not to say that the other defendants cannot be real parties in interest in a request for reexamination, but the existence of such result cannot be assumed merely on the basis of the concomitant use of the same counsel, defenses and/or counterclaims. To be required to be named as a real party in interest, a party must participate in some manner in the request for reexamination. Accordingly, even a search for prior art, review of possibly useful prior art with respect to the patent claims, preparation of an invalidity defense based on found and evaluated prior art to support a litigation defense, and financial support *to carry out a litigation defense* - do not amount to participation in a request for reexamination based on such activities, where the activities were conducted with only an intent to defend the litigation suit. Evidence that the activities were conducted with an intent to file an *inter partes* reexamination request is required, in order for a petitioner to establish that other defendants (co-defendants) in the litigation are real parties in interest in a request for reexamination. In this case, no such evidence has been provided.

In deciding a petition for vacatur, the Office will not engage in conjecture as to the participation in the request for reexamination of any particular alleged unnamed real party in interest. For purposes of this decision, it is not disputed that co-defendants AUDI AG, VOLKSWAGEN AG, Bayerishe Motoren Werke AG, BMW of North America, LLC, Daimler North America Corporation, Daimler AG, Nissan Motor CO., Ltd., and Nissan North America, Inc. may be impacted, and may even benefit from the filing of the instant reexamination. However, it is incumbent upon Patent Owner to present objective evidence that a party not identified as a real party in interest in fact participated (a) in the request for reexamination, or (b) in the reexamination proceeding after the request was filed. In the instant reexamination third party requester identified Volkwagen Group of America, Inc. as the real party in interest and met the required certification in the request for reexamination.

---

sions and not the party who actually files the request). The certification identified in 37 CFR 1.915(b)(7) will constitute a *prima facie* showing that the party requesting the *inter partes* reexamination is not barred from doing so under 37 CFR 1.907. The Office does not intend to look beyond this required certification. It is only in the rare instance where a challenge to the accuracy of the certification is raised by the patent owner, that the question would then need to be addressed. A challenge to the accuracy of the certification must facially establish that the third party requesting the *inter partes* reexamination is barred from doing so under 37 CFR 1.907. Thus, for example, the challenger cannot rely on an argument that the third party requesting reexamination was, at one point, involved with a party barred under 37 CFR 1.907, and should thus be considered as a real party in interest (and barred from filing the request). Involvement *per se* does not facially establish that the other party is a real party in interest.

[11] Pet. under 1.181 at page 2.

In the present *inter partes* reexamination proceeding, the real party in interest is unambiguously identified in the current record. The identification of the real party in interest does not appear to be facially inaccurate. The Office will refuse to accord a filing date to a request for *inter partes* reexamination that does not identify the real party in interest, or which provides an identification of the real party in interest that is ambiguous or facially inaccurate. If the Office accords a filing date to a request for *inter partes* reexamination, and later discovers an ambiguity or a facial inaccuracy in the identification of the real party in interest, the Office can, and will, require that a party appearing before it as third party requester in an *inter partes* reexamination proceeding clarify the ambiguity or facial inaccuracy. However, it does not follow that the Office is empowered to conduct an investigation into the identity of the real party in interest when the statement identifying the real in interest in the record of an *inter partes* reexamination proceeding is neither facially inaccurate nor ambiguous. The Office will not conduct an investigation into the accuracy of the identification of the real party interest in the instant reexamination proceeding, because there is no legal reason to do so, even if the Office's ability to do so could be shown (which it has not been, as discussed above).

Rather than having presented clear and undisputed evidence establishing that VOLKWAGEN OF AMERICA, Inc. is not the only real party in interest in the instant reexamination proceeding, the petition is supported only by supposition and conjecture on patent owner's part. Accordingly, Patent Owner has not demonstrated a persuasive basis for the requested relief of vacatur of the filing date of the instant reexamination proceeding or issuance of a show cause order why the filing date should not be vacated.

Therefore patent owner petition under 37 CFR 1.181 to vacate the order for reexamination in the '1632 proceedings is **dismissed**.

IV. CONCLUSION

1. The August 2, 2011 Patent Owner petition is **dismissed.**

2. Telephone inquiries related to this decision should be directed to Maria Nuzzolillo, Legal Advisor, at (571) 272-8150.

Pinchus M. Laufer
Senior Legal Advisor
Office of Patent Legal Administration

3-12-12

UNITED STATES PATENT AND TRADEMARK OFFICE

UNITED STATES DEPARTMENT OF COMMERCE
United States Patent and Trademark Office
Address: COMMISSIONER FOR PATENTS
P.O. Box 1450
Alexandria, Virginia 22313-1450
www.uspto.gov

APPLICATION NO.	FILING DATE	FIRST NAMED INVENTOR	ATTORNEY DOCKET NO.	CONFIRMATION NO.
95/001,633	05/24/2011	6,393,352 B2	RI3141562-633	1918

40401 7590 03/13/2012

Hershkovitz & Associates, LLC
2845 Duke Street
Alexandria, VA 22314

EXAMINER	
ART UNIT	PAPER NUMBER

DATE MAILED: 03/13/2012

Please find below and/or attached an Office communication concerning this application or proceeding.

UNITED STATES PATENT AND TRADEMARK OFFICE

Commissioner for Patents
United States Patents and Trademark Office
P.O.Box 1450
Alexandria, VA 22313-1450
www.uspto.gov

DO NOT USE IN PALM PRINTER

THIRD PARTY REQUESTER'S CORRESPONDENCE ADDRESS
KENYON & KENYON LLP
ONE BROADWAY
NEW YORK, NY 10004

Date: MAILED

MAR 13 2012

CENTRAL REEXAMINATION UNIT

Transmittal of Communication to Third Party Requester
Inter Partes Reexamination

REEXAMINATION CONTROL NO. : 95001633
PATENT NO. : 6393352
TECHNOLOGY CENTER : 3999
ART UNIT : 3993

Enclosed is a copy of the latest communication from the United States Patent and Trademark Office in the above identified Reexamination proceeding. 37 CFR 1.903.

Prior to the filing of a Notice of Appeal, each time the patent owner responds to this communication, the third party requester of the inter partes reexamination may once file written comments within a period of 30 days from the date of service of the patent owner's response. This 30-day time period is statutory (35 U.S.C. 314(b)(2)), and, as such, it cannot be extended. See also 37 CFR 1.947.

If an ex parte reexamination has been merged with the inter partes reexamination, no responsive submission by any ex parte third party requester is permitted.

All correspondence relating to this inter partes reexamination proceeding should be directed to the Central Reexamination Unit at the mail, FAX, or hand-carry addresses given at the end of the communication enclosed with this transmittal.

UNITED STATES PATENT AND TRADEMARK OFFICE

Commissioner for Patents
United States Patent and Trademark Office
P.O. Box 1450
Alexandria, VA 22313-1450
www.uspto.gov

Hershkovitz & Associates, LLC
2845 Duke Street
Alexandria, VA 22314

(For Patent Owner)

MAILED

MAR 13 2012

CENTRAL REEXAMINATION UNIT

Kenyon & Kenyon
One Broadway
New York, NY 10004

(For Third Party Requester)

In re Sielagoski, *et al.*
Reexamination Proceeding
Control No.: 95/001,633
Filed: May 24, 2011
For: U.S. Patent No.: 6,393,352

: DECISION DISMISSING
: 37 CFR §1.181
: PETITION

This is a decision on the August 8, 2011 Patent Owner petition under 37 CFR 1.181 entitled "PATENT OWNER'S PETITION TO VACATE REEXAMINATION ORDER UNDER 37 CFR §§§ 1.181, 1.907 AND 1.915(b)(8)".

The petition is before the Office of Patent Legal Administration for consideration.

The August 8, 2011 Patent Owner petition under 37 CFR 1.181 is dismissed.

RELEVANT BACKGROUND

1. On May 21, 2002, U.S. Patent No. 6,393,352 (the '352 patent) issued to Sielagoski, *et al.* with 12 claims.

2. On May 24, 2011, a request for *inter partes* reexamination of the '352 patent was deposited by a third party requester, which request was assigned Reexamination Control No. 95/001,633 (the '1633 proceedings). The request sets forth the real party in interest as Volkswagen Group of America, Inc.,[1] and notes a concurrent proceeding that identifies Copending litigation STRAGENT, LLC *et al.* v. AUDI AG *et al.*, Case No. 6:10-cv-00227-LED (E.D. Tex.).

[1] *Id.*, at page 1, paragraph 2b.

3. On June 27, 2011, the Office mailed an order granting re-examination of claims 1-12 of the '352 patent and concurrently mailed a first Office action in the '1633 proceeding.

4. On August 8, 2011, Patent Owner filed the instant petition entitled "PATENT OWNER'S PETITION TO VACATE REEXAMINATION ORDER UNDER 37 CFR §§§ 1.181, 1.907 AND 1.915(b)(8)".

DECISION

I. Relevant Statutes, Regulations and Procedures

35 U.S.C. § 317 Inter partes reexamination prohibited.

(a) ORDER FOR REEXAMINATION.– Notwithstanding any provision of this chapter, once an order for inter partes reexamination of a patent has been issued under section 313, neither the third-party requester nor its privies may file a subsequent request for inter partes reexamination of the patent until an inter partes reexamination certificate is issued and published under section 316, unless authorized by the Director.

(b) FINAL DECISION.– Once a final decision has been entered against a party in a civil action arising in whole or in part under section 1338 of title 28, that the party has not sustained its burden of proving the invalidity of any patent claim in suit or if a final decision in an inter partes reexamination proceeding instituted by a third-party requester is favorable to the patentability of any original or proposed amended or new claim of the patent, then neither that party nor its privies may thereafter request an inter partes reexamination of any such patent claim on the basis of issues which that party or its privies raised or could have raised in such civil action or inter partes reexamination proceeding, and an inter partes reexamination requested by that party or its privies on the basis of such issues may not thereafter be maintained by the Office, notwithstanding any other provision of this chapter. This subsection does not prevent the assertion of invalidity based on newly discovered prior art unavailable to the third-party requester and the Patent and Trademark Office at the time of the inter partes reexamination proceedings.

37 CFR 1.907 *Inter Partes* reexamination prohibited.

(a) Once an order to reexamine has been issued under § 1.931, neither the third party requester, nor its privies, may file a subsequent request for *inter partes* reexamination of the patent until an *inter partes* reexamination certificate is issued under § 1.997, unless authorized by the Director.

(b) Once a final decision has been entered against a party in a civil action arising in whole or in part under 28 U.S.C. 1338 that the party has not sustained its burden of proving invalidity of any patent claim-in-suit, then neither that

party nor its privies may thereafter request *inter partes* reexamination of any such patent claim on the basis of issues which that party, or its privies, raised or could have raised in such civil action, and an *inter partes* reexamination requested by that party, or its privies, on the basis of such issues may not thereafter be maintained by the Office.

(c) If a final decision in an *inter partes* reexamination proceeding instituted by a third party requester is favorable to patentability of any original, proposed amended, or new claims of the *patent*, then neither that party nor its privies may thereafter request *inter partes* reexamination of any such patent claims on the basis of issues which that party, or its privies, raised or could have raised in such *inter partes* reexamination proceeding.

37 CFR 1.913 Persons eligible to file request for *inter partes* reexamination.

Except as provided for in § 1.907, any person other than the patent owner or its privies may, at any time during the period of enforceability of a patent which issued from an original application filed in the United States on or after November 29, 1999, file a request for *inter partes* reexamination by the Office of any claim of the patent on the basis of prior art patents or printed publications cited under § 1.501.

37 CFR 1.915 Content of request for *inter partes* reexamination.

(b) A request for *inter* partes reexamination must include the following parts:

(7) A certification by the third party requester that the estoppel provisions of § 1.907 do not prohibit the inter partes reexamination.

(8) A statement identifying the real party in interest to the extent necessary for a subsequent person filing an *inter partes* reexamination request to determine whether that person is a privy.

...

(d) If *the inter partes* request does not include the fee for requesting *inter partes* reexamination required by paragraph (a) of this section and meet all the requirements of paragraph (b) of this section, then the person identified as requesting *inter partes* reexamination will be so notified and will generally be given an opportunity to complete the request within a specified time. Failure to comply with the notice will result in the *inter partes* reexamination request not being granted a filing date, and will result in placement of the request in the patent file as a citation if it complies with the requirements of § 1.501.

MPEP § 2614 Content of Request for *Inter Partes* Reexamination

The reexamination request must identify the real party in interest who is responsible for filing the reexamination request. This information will be used by future parties requesting reexamination of the same patent, in making the certifications required by 37 CFR 1.915(b)(8).

II. Patent Owner's Petition Under 37 CFR 1.181 for Vacatur

Patent Owner states that the order of re-examination for claims 1-12 of the '352 patent "was an *ultra vires* act by the Office that was not authorized by and is contrary to the Office's Rules and the MPEP"[2]. Patent Owner further states that the June 18, 2011 Order granting the request for *inter partes* re-examination should be vacated.[3] Petitioner asserts that "Requester fails to identify or cloaks the real party(ies) in interest in the request."[4] Patent owner states that a first action for patent infringement against "Defendants Audi AG, Volkswagen Group of America, Inc. Volkswagen AG, Bayerische Motoren Werke Ag, BMW of North America, LLC, BMW Manufacturing Co., LLC, Mercedes-Benz USA LLC, Mercedes-Benz US International, Inc. Daimler North America Corporation, Daimler AG, Nissan Motor Co., Ltd., and Nissan North America, Inc."[5]

Patent owner notes that the requester stated that the "real party in interest is VOLKSWAGEN GROUP OF AMERICA, INC. which is a subsidiary of VOLKSWAGEN AG"[6]. Patent owner states that "Requester did not identify AUDI AG , one of the defendants in the related litigation, as the real party in interest"[7] . Patent owner further states that requester failed to identify "VOLKSWAGEN AG" as a real party in interest" and fails to identify other defendants "Bayerische Motoren Werke Ag, BMW of North America, LLC, BMW Manufacturing Co., LLC, Mercedes-Benz USA LLC, Mercedes-Benz US International, Inc. Daimler North America Corporation, Daimler AG, Nissan Motor Co., Ltd., and Nissan North America, Inc."[8] as real parties in interest.

III. DISCUSSION

The § 1.181 petition by patent owner seeking vacatur of the *inter partes* reexamination based on the failure to name AUDI AG, VOLKSWAGEN AG, Bayerishe Motoren Werke AG, BMW of North America, LLC, Daimler North America Corporation, Daimler AG, Nissan Motor CO., Ltd., and Nissan North America, Inc.[9] as real party in interest is dismissed.

The MPEP[10] makes clear that the Office does not look beyond the required certification in the request for reexamination, except for the rare instance where a

---

[2] Petition under 37 CFR 1.181 at page 1.
[3] Petition at page 5.
[4] Petition at pages 3-4.
[5] Petition at page 2.
[6] Petition at page 2.
[7] Petition at page 4.
[8] Petition at page 5.
[9] Petition at pages 4-5.
[10] MPEP § 2612 states in part: 37 CFR 1.907 defines specific situations where a third party is prohibited from filing a request for an *inter partes* reexamination. 37 CFR 1.915(b)(7) requires the third party requester to certify that the estoppel provisions of 37 CFR 1.907 do not prohibit the filing of the *inter partes* reexamination request by the real party in interest (note that it is the real party in interest that is subject to the estoppel provisions and not the party who actually files the request). The certification identified in 37 CFR 1.915(b)(7) will

challenge to the sufficiency of the certification facially establishes that the identified real party in interest is not accurate. The certification cannot be successfully challenged merely because, at one point, the certified real party in interest was "involved" with another party, or there was some collaboration in a matter other than the request for reexamination.

The common interest among litigation defendants seeking to invalidate or defend against enforcement of a patent, such as in the litigation identified by Patent Owner[11], does not translate *ipso facto* into each defendant being a real party in interest where a request for reexamination is filed by only one of the defendants in the litigation. This is not to say that the other defendants cannot be real parties in interest in a request for reexamination, but the existence of such result cannot be assumed merely on the basis of the concomitant use of the same counsel, defenses and/or counterclaims. To be required to be named as a real party in interest, a party must participate in some manner in the request for reexamination. Accordingly, even a search for prior art, review of possibly useful prior art with respect to the patent claims, preparation of an invalidity defense based on found and evaluated prior art to support a litigation defense, and financial support *to carry out a litigation defense* - do not amount to participation in a request for reexamination based on such activities, where the activities were conducted with only an intent to defend the litigation suit. Evidence that the activities were conducted with an intent to file an *inter partes* reexamination request is required, in order for a petitioner to establish that other defendants (co-defendants) in the litigation are real parties in interest in a request for reexamination. In this case, no such evidence has been provided.

In deciding a petition for vacatur, the Office will not engage in conjecture as to the participation in the request for reexamination of any particular alleged unnamed real party in interest. For purposes of this decision, it is not disputed that co-defendants AUDI AG, VOLKSWAGEN AG, Bayerishe Motoren Werke AG, BMW of North America, LLC, Daimler North America Corporation, Daimler AG, Nissan Motor CO., Ltd., and Nissan North America, Inc. may be impacted, and may even benefit from the filing of the instant reexamination. However, it is incumbent upon Patent Owner to present objective evidence that a party not identified as a real party in interest in fact participated (a) in the request for reexamination, or (b) in the reexamination proceeding after the request was filed. In the instant reexamination third party requester identified Volkwagen Group of America, Inc. as the real party in interest and met the required certification in the request for reexamination.

---

constitute a *prima facie* showing that the party requesting the *inter partes* reexamination is not barred from doing so under 37 CFR 1.907. The Office does not intend to look beyond this required certification. It is only in the rare instance where a challenge to the accuracy of the certification is raised by the patent owner, that the question would then need to be addressed. A challenge to the accuracy of the certification must facially establish that the third party requesting the *inter partes* reexamination is barred from doing so under 37 CFR 1.907. Thus, for example, the challenger cannot rely on an argument that the third party requesting reexamination was, at one point, involved with a party barred under 37 CFR 1.907, and should thus be considered as a real party in interest (and barred from filing the request). Involvement *per se* does not facially establish that the other party is a real party in interest.

[11] Pet. under 1.181 at page 2.

In the present *inter partes* reexamination proceeding, the real party in interest is unambiguously identified in the current record. The identification of the real party in interest does not appear to be facially inaccurate. The Office will refuse to accord a filing date to a request for *inter partes* reexamination that does not identify the real party in interest, or which provides an identification of the real party in interest that is ambiguous or facially inaccurate. If the Office accords a filing date to a request for *inter partes* reexamination, and later discovers an ambiguity or a facial inaccuracy in the identification of the real party in interest, the Office can, and will, require that a party appearing before it as third party requester in an *inter partes* reexamination proceeding clarify the ambiguity or facial inaccuracy. However, it does not follow that the Office is empowered to conduct an investigation into the identity of the real party in interest when the statement identifying the real in interest in the record of an *inter partes* reexamination proceeding is neither facially inaccurate nor ambiguous. The Office will not conduct an investigation into the accuracy of the identification of the real party interest in the instant reexamination proceeding, because there is no legal reason to do so, even if the Office's ability to do so could be shown (which it has not been, as discussed above).

Rather than having presented clear and undisputed evidence establishing that VOLKWAGEN OF AMERICA, Inc. is not the only real party in interest in the instant reexamination proceeding, the petition is supported only by supposition and conjecture on patent owner's part. Accordingly, Patent Owner has not demonstrated a persuasive basis for the requested relief of vacatur of the filing date of the instant reexamination proceeding or issuance of a show cause order why the filing date should not be vacated.

Therefore patent owner petition under 37 CFR 1.181 to vacate the order for reexamination in the '1633 proceedings is **dismissed**.

IV. CONCLUSION

1. The August 8, 2011 Patent Owner petition is **dismissed.**

2. Telephone inquiries related to this decision should be directed to Maria Nuzzolillo, Legal Advisor, at (571) 272-8150.

P. L. Laufer

Pinchus M. Laufer
Senior Legal Advisor
Office of Patent Legal Administration

3-12-12

UNITED STATES PATENT AND TRADEMARK OFFICE

UNITED STATES DEPARTMENT OF COMMERCE
United States Patent and Trademark Office
Address: COMMISSIONER FOR PATENTS
P.O. Box 1450
Alexandria, Virginia 22313-1450
www.uspto.gov

APPLICATION NO.	FILING DATE	FIRST NAMED INVENTOR	ATTORNEY DOCKET NO.	CONFIRMATION NO.
95/001,634	05/24/2011	6,604,043 B2	RI3141563-634	1946

40401 7590 03/13/2012

Hershkovitz & Associates, LLC
2845 Duke Street
Alexandria, VA 22314

EXAMINER	
ART UNIT	PAPER NUMBER

DATE MAILED: 03/13/2012

Please find below and/or attached an Office communication concerning this application or proceeding.

UNITED STATES PATENT AND TRADEMARK OFFICE

Commissioner for Patents
United States Patents and Trademark Office
P.O.Box 1450
Alexandria, VA 22313-1450
www.uspto.gov

DO NOT USE IN PALM PRINTER

THIRD PARTY REQUESTER'S CORRESPONDENCE ADDRESS
KENYON & KENYON LLP
ONE BROADWAY
NEW YORK, NY 10004

Date:

MAILED

MAR 1 3 2012

CENTRAL REEXAMINATION UNIT

Transmittal of Communication to Third Party Requester
Inter Partes Reexamination

REEXAMINATION CONTROL NO. : 95001634
PATENT NO. : 6604043
TECHNOLOGY CENTER : 3999
ART UNIT : 3993

Enclosed is a copy of the latest communication from the United States Patent and Trademark Office in the above identified Reexamination proceeding. 37 CFR 1.903.

Prior to the filing of a Notice of Appeal, each time the patent owner responds to this communication, the third party requester of the inter partes reexamination may once file written comments within a period of 30 days from the date of service of the patent owner's response. This 30-day time period is statutory (35 U.S.C. 314(b)(2)), and, as such, it cannot be extended. See also 37 CFR 1.947.

If an ex parte reexamination has been merged with the inter partes reexamination, no responsive submission by any ex parte third party requester is permitted.

All correspondence relating to this inter partes reexamination proceeding should be directed to the Central Reexamination Unit at the mail, FAX, or hand-carry addresses given at the end of the communication enclosed with this transmittal.

UNITED STATES PATENT AND TRADEMARK OFFICE

Commissioner for Patents
United States Patent and Trademark Office
P.O. Box 1450
Alexandria, VA 22313-1450
www.uspto.gov

Hershkovitz & Associates, LLC
2845 Duke Street
Alexandria, VA 22314

(For Patent Owner)

MAILED
Mar 13 2012
CENTRAL REEXAMINATION UNIT

Kenyon & Kenyon
One Broadway
New York, NY 10004

(For Third Party Requester)

In re Sielagoski, *et al.*
Reexamination Proceeding
Control No.: 95/001,634
Filed: May 24, 2011
For: U.S. Patent No.: 6,604,043

: DECISION DISMISSING
: 37 CFR §1.181
: PETITION

This is a decision on the August 8, 2011 Patent Owner petition under 37 CFR 1.181 entitled "PATENT OWNER'S PETITION TO VACATE REEXAMINATION ORDER UNDER 37 CFR §§§ 1.181, 1.907 AND 1.915(b)(8)".

The petition is before the Office of Patent Legal Administration for consideration.

The August 8, 2011 Patent Owner petition under 37 CFR 1.181 is dismissed.

RELEVANT BACKGROUND

1. On August 5, 2003, U.S. Patent No. 6,604,043 (the '043 patent) issued to Sielagoski, *et al.* wth 10 claims.

2. On May 24, 2011, a request for *inter partes* reexamination of the '043 patent was deposited by a third party requester, which request was assigned Reexamination Control No. 95/001,634 (the '1634 proceedings). The request sets forth the real party in interest as Volkswagen Group of America, Inc.,[1] and notes a concurrent proceeding that identifies Copending litigation STRAGENT, LLC *et al.* v. AUDI AG *et al.*, Case No. 6:10-cv-00227-LED (E.D. Tex.).

[1] *Id.*, at page 1, paragraph 2b.

4. On June 27, 2011, the Office mailed an order granting re-examination of claims 1-10 of the '043 patent and concurrently mailed a first Office action in the '1634 proceeding.

5. On August 8, 2011, Patent Owner filed the instant petition entitled "PATENT OWNER'S PETITION TO VACATE REEXAMINATION ORDER UNDER 37 CFR §§§ 1.181, 1.907 AND 1.915(b)(8)".

DECISION

I. Relevant Statutes, Regulations and Procedures

35 U.S.C. § 317 Inter partes reexamination prohibited.

(a) ORDER FOR REEXAMINATION.– Notwithstanding any provision of this chapter, once an order for inter partes reexamination of a patent has been issued under section 313, neither the third-party requester nor its privies may file a subsequent request for inter partes reexamination of the patent until an inter partes reexamination certificate is issued and published under section 316, unless authorized by the Director.

(b) FINAL DECISION.– Once a final decision has been entered against a party in a civil action arising in whole or in part under section 1338 of title 28, that the party has not sustained its burden of proving the invalidity of any patent claim in suit or if a final decision in an inter partes reexamination proceeding instituted by a third-party requester is favorable to the patentability of any original or proposed amended or new claim of the patent, then neither that party nor its privies may thereafter request an inter partes reexamination of any such patent claim on the basis of issues which that party or its privies raised or could have raised in such civil action or inter partes reexamination proceeding, and an inter partes reexamination requested by that party or its privies on the basis of such issues may not thereafter be maintained by the Office, notwithstanding any other provision of this chapter. This subsection does not prevent the assertion of invalidity based on newly discovered prior art unavailable to the third-party requester and the Patent and Trademark Office at the time of the inter partes reexamination proceedings.

37 CFR 1.907 *Inter Partes* reexamination prohibited.

(a) Once an order to reexamine has been issued under § 1.931, neither the third party requester, nor its privies, may file a subsequent request for *inter partes* reexamination of the patent until an *inter partes* reexamination certificate is issued under § 1.997, unless authorized by the Director.

(b) Once a final decision has been entered against a party in a civil action arising in whole or in part under 28 U.S.C. 1338 that the party has not sustained its burden of proving invalidity of any patent claim-in-suit, then neither that

party nor its privies may thereafter request *inter partes* reexamination of any such patent claim on the basis of issues which that party, or its privies, raised or could have raised in such civil action, and an *inter partes* reexamination requested by that party, or its privies, on the basis of such issues may not thereafter be maintained by the Office.

(c) If a final decision in an *inter partes* reexamination proceeding instituted by a third party requester is favorable to patentability of any original, proposed amended, or new claims of the *patent*, then neither that party nor its privies may thereafter request *inter partes* reexamination of any such patent claims on the basis of issues which that party, or its privies, raised or could have raised in such *inter partes* reexamination proceeding.

37 CFR 1.913 Persons eligible to file request for *inter partes* reexamination.

Except as provided for in § 1.907, any person other than the patent owner or its privies may, at any time during the period of enforceability of a patent which issued from an original application filed in the United States on or after November 29, 1999, file a request for *inter partes* reexamination by the Office of any claim of the patent on the basis of prior art patents or printed publications cited under § 1.501.

37 CFR 1.915 Content of request for *inter partes* reexamination.

(b) A request for *inter* partes reexamination must include the following parts:

(7) A certification by the third party requester that the estoppel provisions of § 1.907 do not prohibit the inter partes reexamination.

(8) A statement identifying the real party in interest to the extent necessary for a subsequent person filing an *inter partes* reexamination request to determine whether that person is a privy.

...

(d) If *the inter partes* request does not include the fee for requesting *inter partes* reexamination required by paragraph (a) of this section and meet all the requirements of paragraph (b) of this section, then the person identified as requesting *inter partes* reexamination will be so notified and will generally be given an opportunity to complete the request within a specified time. Failure to comply with the notice will result in the *inter partes* reexamination request not being granted a filing date, and will result in placement of the request in the patent file as a citation if it complies with the requirements of § 1.501.

MPEP § 2614 Content of Request for *Inter Partes* Reexamination

The reexamination request must identify the real party in interest who is responsible for filing the reexamination request. This information will be used by future parties requesting reexamination of the same patent, in making the certifications required by 37 CFR 1.915(b)(8).

II. Patent Owner's Petition Under 37 CFR 1.181 for Vacatur

Patent Owner states that the order of re-examination for claims 1-10 of the '043 patent "was an *ultra vires* act by the Office that was not authorized by and is contrary to the Office's Rules and the MPEP"[2]. Patent Owner further states that the June 18, 2011 Order granting the request for *inter partes* re-examination should be vacated.[3] Petitioner asserts that "Requester fails to identify or cloaks the real party(ies) in interest in the request."[4] Patent owner states that a first action for patent infringement against "Defendants Audi AG, Volkswagen Group of America, Inc. Volkswagen AG, Bayerische Motoren Werke Ag, BMW of North America, LLC, BMW Manufacturing Co., LLC, Mercedes-Benz USA LLC, Mercedes-Benz US International, Inc. Daimler North America Corporation, Daimler AG, Nissan Motor Co., Ltd., and Nissan North America, Inc."[5]

Patent owner notes that the requester stated that the "real party in interest is VOLKSWAGEN GROUP OF AMERICA, INC. which is a subsidiary of VOLKSWAGEN AG"[6]. Patent owner states that "Requester did not identify AUDI AG , one of the defendants in the related litigation, as the real party in interest"[7] . Patent owner further states that requester failed to identify "VOLKSWAGEN AG" as a real party in interest" and fails to identify other defendants "Bayerische Motoren Werke Ag, BMW of North America, LLC, BMW Manufacturing Co., LLC, Mercedes-Benz USA LLC, Mercedes-Benz US International, Inc. Daimler North America Corporation, Daimler AG, Nissan Motor Co., Ltd., and Nissan North America, Inc."[8] as real parties in interest.

III. DISCUSSION

The § 1.181 petition by patent owner seeking vacatur of the *inter partes* reexamination based on the failure to name AUDI AG, VOLKSWAGEN AG, Bayerishe Motoren Werke AG, BMW of North America, LLC, Daimler North America Corporation, Daimler AG, Nissan Motor CO., Ltd., and Nissan North America, Inc.[9] as real party in interest is dismissed.

The MPEP[10] makes clear that the Office does not look beyond the required certification in the request for reexamination, except for the rare instance where a

---

[2] Petition under 37 CFR 1.181 at page 1.
[3] Petition at page 5.
[4] Petition at pages 3-4.
[5] Petition at page 2.
[6] Petition at page 2.
[7] Petition at page 4.
[8] Petition at page 5.
[9] Petition at pages 4-5.
[10] MPEP § 2612 states in part: 37 CFR 1.907 defines specific situations where a third party is prohibited from filing a request for an *inter partes* reexamination. 37 CFR 1.915(b)(7) requires the third party requester to certify that the estoppel provisions of 37 CFR 1.907 do not prohibit the filing of the *inter partes* reexamination request by the real party in interest (note that it is the real party in interest that is subject to the estoppel provisions and not the party who actually files the request). The certification identified in 37 CFR 1.915(b)(7) will

challenge to the sufficiency of the certification facially establishes that the identified real party in interest is not accurate. The certification cannot be successfully challenged merely because, at one point, the certified real party in interest was "involved" with another party, or there was some collaboration in a matter other than the request for reexamination.

The common interest among litigation defendants seeking to invalidate or defend against enforcement of a patent, such as in the litigation identified by Patent Owner[11], does not translate *ipso facto* into each defendant being a real party in interest where a request for reexamination is filed by only one of the defendants in the litigation. This is not to say that the other defendants cannot be real parties in interest in a request for reexamination, but the existence of such result cannot be assumed merely on the basis of the concomitant use of the same counsel, defenses and/or counterclaims. To be required to be named as a real party in interest, a party must participate in some manner in the request for reexamination. Accordingly, even a search for prior art, review of possibly useful prior art with respect to the patent claims, preparation of an invalidity defense based on found and evaluated prior art to support a litigation defense, and financial support *to carry out a litigation defense* - do not amount to participation in a request for reexamination based on such activities, where the activities were conducted with only an intent to defend the litigation suit. Evidence that the activities were conducted with an intent to file an *inter partes* reexamination request is required, in order for a petitioner to establish that other defendants (co-defendants) in the litigation are real parties in interest in a request for reexamination. In this case, no such evidence has been provided.

In deciding a petition for vacatur, the Office will not engage in conjecture as to the participation in the request for reexamination of any particular alleged unnamed real party in interest. For purposes of this decision, it is not disputed that co-defendants AUDI AG, VOLKSWAGEN AG, Bayerishe Motoren Werke AG, BMW of North America, LLC, Daimler North America Corporation, Daimler AG, Nissan Motor CO., Ltd., and Nissan North America, Inc. may be impacted, and may even benefit from the filing of the instant reexamination. However, it is incumbent upon Patent Owner to present objective evidence that a party not identified as a real party in interest in fact participated (a) in the request for reexamination, or (b) in the reexamination proceeding after the request was filed. In the instant reexamination third party requester identified Volkwagen Group of America, Inc. as the real party in interest and met the required certification in the request for reexamination.

---

constitute a *prima facie* showing that the party requesting the *inter partes* reexamination is not barred from doing so under 37 CFR 1.907. The Office does not intend to look beyond this required certification. It is only in the rare instance where a challenge to the accuracy of the certification is raised by the patent owner, that the question would then need to be addressed. A challenge to the accuracy of the certification must facially establish that the third party requesting the *inter partes* reexamination is barred from doing so under 37 CFR 1.907. Thus, for example, the challenger cannot rely on an argument that the third party requesting reexamination was, at one point, involved with a party barred under 37 CFR 1.907, and should thus be considered as a real party in interest (and barred from filing the request). Involvement *per se* does not facially establish that the other party is a real party in interest.

[11] Pet. under 1.181 at page 2.

In the present *inter partes* reexamination proceeding, the real party in interest is unambiguously identified in the current record. The identification of the real party in interest does not appear to be facially inaccurate. The Office will refuse to accord a filing date to a request for *inter partes* reexamination that does not identify the real party in interest, or which provides an identification of the real party in interest that is ambiguous or facially inaccurate. If the Office accords a filing date to a request for *inter partes* reexamination, and later discovers an ambiguity or a facial inaccuracy in the identification of the real party in interest, the Office can, and will, require that a party appearing before it as third party requester in an *inter partes* reexamination proceeding clarify the ambiguity or facial inaccuracy. However, it does not follow that the Office is empowered to conduct an investigation into the identity of the real party in interest when the statement identifying the real in interest in the record of an *inter partes* reexamination proceeding is neither facially inaccurate nor ambiguous. The Office will not conduct an investigation into the accuracy of the identification of the real party interest in the instant reexamination proceeding, because there is no legal reason to do so, even if the Office's ability to do so could be shown (which it has not been, as discussed above).

Rather than having presented clear and undisputed evidence establishing that VOLKWAGEN OF AMERICA, Inc. is not the only real party in interest in the instant reexamination proceeding, the petition is supported only by supposition and conjecture on patent owner's part. Accordingly, Patent Owner has not demonstrated a persuasive basis for the requested relief of vacatur of the filing date of the instant reexamination proceeding or issuance of a show cause order why the filing date should not be vacated.

Therefore patent owner petition under 37 CFR 1.181 to vacate the order for reexamination in the '1634 proceedings is **dismissed**.

IV. CONCLUSION

1. The August 8, 2011 Patent Owner petition is **dismissed.**

2. Telephone inquiries related to this decision should be directed to Maria Nuzzolillo, Legal Advisor, at (571) 272-8150.

Pinchus M. Laufer
Senior Legal Advisor
Office of Patent Legal Administration

3-12-12

UNITED STATES PATENT AND TRADEMARK OFFICE

UNITED STATES DEPARTMENT OF COMMERCE
United States Patent and Trademark Office
Address: COMMISSIONER FOR PATENTS
P.O. Box 1450
Alexandria, Virginia 22313-1450
www.uspto.gov

APPLICATION NO.	FILING DATE	FIRST NAMED INVENTOR	ATTORNEY DOCKET NO.	CONFIRMATION NO.
95/001,635 + 90/009907	05/26/2011	7779581	EPE-00001	6004

42754 7590 12/20/2011

Nields, Lemack & Frame, LLC
176 E. Main Street
Suite #5
Westborough, MA 01581

EXAMINER	
ART UNIT	PAPER NUMBER

DATE MAILED: 12/20/2011

Please find below and/or attached an Office communication concerning this application or proceeding.

UNITED STATES PATENT AND TRADEMARK OFFICE

Commissioner for Patents
United States Patents and Trademark Office
P.O.Box 1450
Alexandria, VA 22313-1450
www.uspto.gov

DO NOT USE IN PALM PRINTER

THIRD PARTY REQUESTER'S CORRESPONDENCE ADDRESS

FOLEY HOAG, LLP
PATENT GROUP, WORLD TRADE CENTER WEST
155 SEAPORT BLVD
BOSTON, MA 02110

Date: 12-20-11

Transmittal of Communication to Third Party Requester
Inter Partes Reexamination

REEXAMINATION CONTROL NO. : 95001635 (90/009907)
PATENT NO. : 7779581
TECHNOLOGY CENTER : 3999
ART UNIT : 3993

Enclosed is a copy of the latest communication from the United States Patent and Trademark Office in the above identified Reexamination proceeding. 37 CFR 1.903.

Prior to the filing of a Notice of Appeal, each time the patent owner responds to this communication, the third party requester of the inter partes reexamination may once file written comments within a period of 30 days from the date of service of the patent owner's response. This 30-day time period is statutory (35 U.S.C. 314(b)(2)), and, as such, it cannot be extended. See also 37 CFR 1.947.

If an ex parte reexamination has been merged with the inter partes reexamination, no responsive submission by any ex parte third party requester is permitted.

All correspondence relating to this inter partes reexamination proceeding should be directed to the Central Reexamination Unit at the mail, FAX, or hand-carry addresses given at the end of the communication enclosed with this transmittal.

UNITED STATES PATENT AND TRADEMARK OFFICE

Commissioner for Patents
United States Patent and Trademark Office
P.O. Box 1450
Alexandria, VA 22313-1450
www.uspto.gov

MAILED

DEC 20 2011

CENTRAL REEXAMINATION UNIT

Nields, Lemack & Frame, LLC
176 E. Main Street
Suite #5
Westborough MA 01581

(For Patent Owner)

Foley Hoag, LLP
Patent Group, World Trade Center West
155 Seaport Blvd.
Boston, MA 02110

(For *Inter Partes* Requester)

Ex parte Reexamination Proceeding	:
Control No. 90/009,907	:
Filed: May 4, 2011	:
For: U.S. Patent No. 7,779,581	: **DECISION, *SUA SPONTE*,**
	: **TO MERGE**
	: **REEXAMINATION**
Inter Partes Reexamination Proceeding	: **PROCEEDINGS**
Control No. 95/001,635	:
Filing Date: May 26, 2011	:
For: U.S. Patent No. 7,779,581	:

The above-captioned reexamination proceedings are before the Office of Patent Legal Administration for *sua sponte* consideration of whether the proceedings should be merged under 37 CFR 1.989 at this time.

BACKGROUND

1. Patent number 7,779,581 (the '581 patent) issued to Flaherty *et al.* on August 24, 2010, with claims 1-47.

2. The '581 patent is the subject of concurrent proceedings styled *ADA Solutions v. Access Products*, *ADA Solutions v. Engineered Plastics*, and *ADA Solutions v. Cape Fear Systems,* Case Nos. 11-11757-NMG, 11-11758-NMG, and 11-11759-NMG (D.Mass.). The complaints were filed on October 4, 2011.[1]

3. On May 4, 2011, patent owner, ADA Solutions, filed a request for *ex parte* reexamination of claims 1 and 46 of the '581 patent; the request was assigned control no. 90/009,907 (the '9907 proceeding). Reexamination was ordered on June 6, 2011. A patent owner's statement was received on August 8, 2011.

[1] *See* Notice of Concurrent Proceedings, filed October 5, 2011 in Reexamination Control Number 95/001,635.

4. On May 26, 2011, a third party, Engineered Plastics, Inc., filed a request for *inter partes* reexamination of all claims of the '581 patent (claims 1-47); this request was assigned control no. 95/001,635 (the '1635 proceeding). Reexamination of claims 1-47 was ordered on August 12, 2011.

5. As of the date of this decision, no claim amendments have been made in either proceeding, and no Office action has been issued in either proceeding.

DECISION

I. MERGER OF PROCEEDINGS

As evidenced by the above review of facts, both the *inter partes* '1635 proceeding and the *ex parte* '9907 reexamination proceedings are currently pending. An order granting reexamination of claims 1 and 16 of the '581 patent has been mailed and a patent owner's statement has been filed in the '9907 *ex parte* reexamination proceeding. An order granting reexamination of claims 1-47 has been mailed in the '1635 *inter partes* reexamination proceeding. Therefore, consideration of merger pursuant to 37 CFR 1.989 is appropriate at this time.

MPEP 2686.01 points out:

> Where a second request for reexamination is filed and reexamination is ordered, and a first reexamination proceeding is pending, the proceedings will be merged where the Office (in its discretion) deems it appropriate to do so, to facilitate the orderly handling of the proceedings. However, a decision not to merge is within the sole discretion of the Office to facilitate/carry out the statutory mandate of 35 U.S.C. 314(c) to conduct reexamination proceedings with "special dispatch."

The general policy of the Office is that two reexamination proceedings will not be conducted separately, and at the same time, as to a particular patent. The rationale for this policy is (1) to prevent inconsistent, and possibly conflicting, amendments from being introduced into the two proceedings on behalf of the patent owner, (2) to provide a comprehensive examination of the patent based on the issues raised in both of the proceedings, and (3) to expedite the prosecution of both proceedings. In this instance, based upon the record as a whole, it is found, based on the facts as they exist at present, that merger of the proceedings should facilitate the orderly handling of the proceedings with special dispatch. Accordingly, the 90/009,907 and 95/001,635 proceedings **are hereby merged**. The merged proceeding will be conducted in accordance with the guidelines and requirements that follow.

II. THE SAME CLAIMS MUST BE MAINTAINED IN BOTH PROCEEDINGS

The claims are identical in both proceedings. Patent owner is required to maintain the same claims (and specification) in both files throughout the merged proceeding.

III. CONDUCT OF MERGED PROCEEDING

A. Governing regulations for the merged proceeding:

The present decision merges an *ex parte* reexamination proceeding with an *inter partes* reexamination proceeding. Pursuant to 37 CFR 1.989(b), the merged proceeding is governed by 37 CFR 1.902 through 1.997, except that the rights of the patent owner requester of the *ex parte* reexamination are governed by 37 CFR 1.510 through 1.560. The examiner will conduct reexamination in the merged proceeding for claims 1-47 of the '581 patent.

B. *Inter partes* Third Party Requester Participation:

1. Comment rights:

The *inter partes* requester can comment pursuant to 35 U.S.C. 314(b)(2). [2] First, an *inter partes* requester's right to comment is contingent upon the patent owner responding to, or commenting on, an Office action. Second, the *inter partes* requester's right to comment is limited to issues raised in either the Office action or the patent owner's response to the action. Finally, the *inter partes* requester's comments must be submitted within 30 days from the date of service of the patent owner's response. An *inter partes* requester does not have a right to comment on any issue raised outside the confines of the statute, e.g. issues raised in a previous Office action (but not raised in the most recent Office action or response) or the request and comments from the *ex parte* requester. The *inter partes* requester's comments must be submitted within the statutory time period of 30 days from date of service of the patent owner's response.

2. Appeal Rights:

A discussion of third party requester's appeal rights can be found in section G below.

C. Papers mailed/filed:

All papers mailed by the Office throughout the merged proceeding will take the form of a single action which applies to both proceedings. All papers issued by the Office, or filed by the patent owner and the third party requester(s), will contain the identifying data for both files and will be physically entered in each reexamination file. All papers filed by the patent owner and the third party requester must consist of a single paper, **filed in duplicate**, each bearing a signature and identifying data for both files, for entry into each file.

---

[2] Each time that the patent owner files a response to an action on the merits from the Patent and Trademark Office, the *inter partes* third-party requester shall have one opportunity to file written comments addressing issues raised by the action of the Office or the patent owner's response thereto, if those written comments are received by the Office within 30 days after the date of service of the patent owner's response.

All papers filed by the patent owner and the third party requester(s) should be directed:

by Mail to: Attn: Mail Stop "*Inter Partes* Reexam"
Central Reexamination Unit
Commissioner for Patents
P.O. Box 1450
Alexandria, VA 22313-1450

by FAX to: (571) 273-9900
Central Reexamination Unit

by Hand to: Customer Service Window
Attn: Central Reexamination Unit
Randolph Building, Lobby Level
401 Dulany Street
Alexandria, VA 22314

By EFS:

Registered users may submit papers via
the electronic filing system EFS-Web, at:

https:// efs.uspto.gov/efile/myportal/efs-registered.

Patent owner and requester are reminded that every paper filed (including papers filed *via* facsimile transmission) in the merged proceeding subsequent to this decision must be served on the other party, and every paper filed must reflect that such paper was served on the other party in the merged proceeding, pursuant to 37 CFR 1.903. All papers are to be addressed to the Central Reexamination Unit as provided above.

D. Amendments:

The filing of any amendments to the drawings, specification or claims must comply with 37 CFR 1.943, which incorporates the provisions of 37 CFR 1.530, and the guidelines of MPEP § 2666.01, which in turn references the guidelines of MPEP § 2250.

37 CFR 1.121 does not apply to amendments in reexamination. Accordingly, clean copies of the amended claims are not required and are not to be submitted; rather amendments are to be presented via markings pursuant to paragraph 37 CFR 1.530(f), except that a claim should be canceled by a statement canceling the claim, without presentation of the text of the claim.

Pursuant to 37 CFR 1.530(i), all amendments must be made relative to the patent specification, including the claims, and drawings, which are in effect as of the date of filing the request for reexamination. *Amendments are not to be made relative to previous amendments.* Thus, for all amendments, all words not appearing in the patent are always underlined, and only words being deleted from the patent appear in brackets.

E. Fees:

Where a paper is filed that requires payment of a fee (*e.g.*, petition fee, excess claims fee, extension of time fee, appeal fee, brief fee, oral hearing fee), only a single fee need be paid. For example, only one fee need be paid for any patent owner's appellant brief (or that of the *inter partes* reexamination requester) which may be filed, even though the brief relates to merged multiple proceedings, and copies must be filed (as pointed out above) for each file in the merged proceeding.

F. Citation of Patents and Printed Publications:

Upon return of the present merged proceeding to the examiner, the examiner will review the files to ensure that each file contains identical citations of prior patents and printed publications, and will cite such documents as are necessary as part of the next action in order to place the files in that condition.

G. Appeal Rights and Procedures for *Inter Partes* Reexamination

The *inter partes* reexamination procedures for taking appeal, and for participating in the patent owner's appeal, are explained in MPEP §§ 2674 through 2675 and 2678 through 2683.

With respect to a patent owner's notice of appeal, the appeal must only be taken from the rejection(s) of the claims in the Right of Appeal Notice (RAN) that the patent owner proposes to contest, and must identify each claim rejected by examiner that the patent owner intends to contest.

With respect to a third party requester's notice of appeal, the appeal must only be taken from the finding(s) of patentability of claims in the RAN that the third party requester proposes to contest. As set forth in MPEP § 2674, the third party requester must identify in the notice of appeal each rejection that was previously proposed by third party requester that the third party requester intends to contest and each rejection made and later withdrawn by the examiner that the third party requester intends to contest. It is not sufficient to merely appeal from the allowance of a claim (i.e., the examiner's finding of a claim patentable); the third party requester must identify each previously proposed rejection to be contested.

No new ground of rejection can be proposed by a third party requester appellant, unless such ground was withdrawn by the examiner during the prosecution of the proceeding, and the third party requester has not yet had an opportunity to propose it as a third party requester proposed ground of rejection. See 37 CFR 41.67(c)(1)(vi) as to the proposed rejections that a requester can challenge in the appellant brief.

CONCLUSION

1. *Inter partes* Reexamination Control No. 95/001,635 and *ex parte* Reexamination Control No. 90/009,907 are **merged into a single proceeding**, to be conducted in accordance with the procedure set forth in Part III of this decision.

2. Any questions concerning this communication should be directed to Michael Cygan, Legal Advisor, at 571-272-7700.

Pinchus M. Laufer
Legal Advisor
Office of Patent Legal Administration

UNITED STATES PATENT AND TRADEMARK OFFICE

Commissioner for Patents
United States Patent and Trademark Office
P.O. Box 1450
Alexandria, VA 22313-1450
www.uspto.gov

MAILED

JAN 12 2012

CENTRAL REEXAMINATION UNIT

Attn: Kevin B. Laurence
Stoel Rives LLP –SLC
One Utah Center
Salt Lake City, UT 84111

(For Patent Owner)

Attn: James F. Vaughan
Womble Carlyle Sandridge & Rice LLP
P.O. Box 7037
Atlanta, GA 30357-0037

(For Third Party Requester)

In re Hartzell *et al.*
Inter Partes Reexamination Proceeding
Control No. 95/001,638
Filed: June 2, 2011
For: U.S. Patent No. 7,090,904 B2

DECISION
DISMISSING PETITION
UNDER 1.183

This is a decision on the January 4, 2012 third party requester petition entitled "PETITION UNDER 37 C.F.R. § 1.183."

The third party requester petition is before the Office of Patent Legal Administration.

The petition is **dismissed**.

BACKGROUND

- On June 2, 2011, a request for *inter partes* reexamination of U.S. Patent Number 7,090,904 B2 was filed by the third party requester, and the resulting reexamination proceeding was assigned control number 95/001,638 ("the '1638 proceeding").

- On July 15, 2011, reexamination was ordered and a first action confirming some, but not all claims under reexamination, was mailed in the proceeding.

- Prosecution progressed, until, on December 15, 2011, a Right of Appeal Notice was mailed by the Office, setting a time period for filing of a Notice of Appeal to run the longer of 1 month or thirty days from the date of the Right of Appeal Notice.

- On January 4, 2012, third party requester filed two petitions; the first entitled "PETITION TO REOPEN PROSECUTION;" the second entitled "PETITION UNDER 37 C.F.R. § 1.183." The latter petition, seeking an extension of time to file third party requester's Notice of appeal, is the subject of this decision.

PERTINENT REGULATIONS

37 C.F.R. § 1.183 provides:

> In an extraordinary situation, when justice requires, any requirement of the regulations in this part which is not a requirement of the statutes may be suspended or waived by the Director or the Director's designee, sua sponte, or on petition of the interested party, subject to such other requirements as may be imposed. Any petition under this section must be accompanied by the petition fee set forth in § 1.17(f).

37 C.F.R. § 1.181(f) provides, in pertinent part:

> The mere filing of a petition will not stay any period for reply that may be running against the application, nor act as a stay of other proceedings.

37 C.F.R. § 41.61(e) provides, in pertinent part:

> The time for filing a notice of appeal or cross appeal may not be extended.

DECISION

Third party requester petitioner filed the instant petition to waive § 41.61(e) either entirely, or to extent that the time to file a Notice of appeal would be reset to run from the date of the decision dismissing the petition. Petitioner states that such waiver would prevent the unnecessary expenditure of resources by the party in appealing the proceeding should the Rule §§ 1.181/1.182 petition be granted. However, on the same date as the instant decision, the Office dismissed the January 4, 2012 petition filed under §§ 1.181 and 1.182. Therefore, any resources expended in appealing the proceeding will not be mooted by the granting of that petition.

With respect to the request for a one month time period to be granted from the mailing date of the decision on the §§ 1.181 and 1.182 petition, § 1.181(f) states that the mere filing of a petition will not stay any period for reply. Therefore, petitioner has no reasonable basis to expect that, absent a grant of the §§ 1.181/1.182 petition, the time for filing a Notice of appeal would be extended in the absence of a showing of extraordinary circumstances under § 1.183. Petitioner has not presented any reasoning supporting a finding of extraordinary situations in this proceeding such that an additional month would be required in the interests of justice for petitioner to file a Notice of appeal.

For the foregoing reasons, the instant petition is dismissed. The time period for filing a Notice of appeal continues to run as set forth in the Right of Appeal Notice.

CONCLUSION

- The petition is **dismissed**.
- The time period for filing a Notice of appeal continues to run as set forth in the Right of Appeal Notice.
- Any inquiry concerning this decision should be directed to Michael Cygan, Legal Advisor, at (571) 272-7700.

/Michael Cygan/

Michael Cygan
Legal Advisor
Office of Patent Legal Administration

January 12, 2012

UNITED STATES PATENT AND TRADEMARK OFFICE

Commissioner for Patents
United States Patent and Trademark Office
P.O. Box 1450
Alexandria, VA 22313-1450
www.uspto.gov

STOEL RIVES LLP- SLC
201 SOUTH MAIN STREET, SUITE 1100
ONE UTAH CENTER
SALT LAKE CITY, UT 84111

(FOR PATENT OWNER)

MAILED

JAN 12 2012

CENTRAL REEXAMINATION UNIT

WOMBLE CARLYLE SANDRIDGE
& RICE, PLLC
ATTN: IP DOCKETING
P.O. BOX 7037
ATLANTA, GA 30357-0037

(FOR THIRD PARTY
REQUESTER)

In re Hartzell et al.
Reexamination Proceeding
Control No. : 95/001,638
Filed: June 2, 2011
Patent No. 7,090,904

: DECISION ON
: PETITION
: UNDER 37 CFR 1.181

This is a decision addressing third party requester's petition, dated January 4, 2012, entitled "PETITION TO REOPEN PROSECUTION."

The petition is before the Director of the Central Reexamination Unit for decision.

SUMMARY

The third party requester's January 4, 2012 petition is DISMISSED as untimely and RETURNED as improper for the reasons set forth below, without consideration of the merits.

Brief Statement of Relevant Facts

1. Patent No. 7,090,904 (the '904 patent) issued on August 15, 2006.

2. A request for reexamination, assigned Control No. 95/001,638 (the '638 proceeding), was filed by a Third Party Requester on June 2, 2011.

3. Reexamination was ordered in the '638 reexamination proceeding on July 15, 2011. A non-final Office action was mailed on the same day. The Office action confirmed the patentability of claims 16-29 of the '904 patent. The Office action found that Sullivan did not teach fin strips connected to the bag seal zone. See, e.g., page 4 of the Office action.

4. The patent owner did not file a response to the July 15, 2011 Office action.

5. An Action Closing Prosecution (ACP) was mailed on October 20, 2011. The ACP maintained the confirmation of the patentability of claims 16-29 of the '904 patent.

6. The patent owner did not file a response to the October 20, 2011 ACP.

7. On December 15, 2011, a Right of Appeal Notice (RAN) was mailed. The RAN maintained the confirmation of claims 16-29 as set forth in the July 15, 2011 Office action and the ACP.

8. On January 4, 2012, the third party requester filed the petition under 37 CFR 1.181 and/or 1.182 ("the petition"). The requester also filed a petition under 37 CFR 1.183, which will be addressed in a separate decision in due course.

Discussion

The third party requester (petitioner) requests that prosecution be reopened. Specifically, petitioner requests a new Office action that adopts the proposed anticipation and obviousness rejections based on Sullivan. The petitioner argues that the Office action, dated July 15, 2011, has different factual findings regarding the teachings of Sullivan than the ACP issued in related reexamination proceeding 95/001,640. See pages 2-4 of the petition.

The request to reopen prosecution is dismissed as untimely and returned as improper.

Statement of Relevant Authority

37 CFR 1.181(f) states:

> The mere filing of a petition will not stay any period for reply that may be running against the application, nor act as a stay of other proceedings. Any petition under this part not filed within **two months** of the mailing date of the action or notice from which relief is requested may be dismissed as untimely, except as otherwise provided. **This two-month period is not extendable**. (Emphasis added.)

...

Decision

Although the January 4, 2012 petition contains statements that an alternative relief under 37 CFR 1.182 is sought, the petition is being decided solely under 37 CFR 1.181. In other words, the requester's combined petition under 37 CFR 1.181 and 1.182 is deemed improper because it combines two distinct petitions, which is not compliant with 37 CFR 1.4. Therefore, any requested relief under 37 CFR 1.182 is procedurally dismissed under 37 CFR 1.4. In summary, this decision solely addresses the issues raised under 37 CFR 1.181, e.g., whether the examiner followed the laws and procedures in closing prosecution.

The petition treated under 37 CFR 1.181 requests that prosecution be reopened. The petitioner filed the petition on January 4, 2012. The action from which relief is requested is the Action Closing Prosecution, which was mailed on October 20, 2011. Therefore, the petition was filed over **two** months from the mailing date of the action (October 20, 2011) from which relief is requested. As quoted above, 37 CFR 1.181(f) requires petitions under that section be filed within **two** months from the mailing date of the action from which relief is requested and that such time period is not extendable.

Therefore, the petition is dismissed as untimely because it was not filed within the two month time period required by 37 CFR 1.181(f).

In addition, the petition is improper. The basis for reopening prosecution presented in the petition (e.g., disagreement on Sullivan's teachings) address the merits of the examiner's determination, which is an appealable (and not petitionable) issue. See MPEP 1201 and 1002. Therefore, the petition fails to raise any issue that can be addressed by a petition filed under 37 CFR 1.181 (e.g., supervisory review of whether the examiner followed Office regulations and policies in issuing the Office action). Accordingly, the petition is deemed an improper paper and will be returned in accordance with 37 CFR 1.939 and MPEP 2667.

In view of the above, the petition in the reexamination proceeding does not have an entry right under the rules. Therefore, the petition and its supporting exhibit will not be made of record in the '638 reexamination proceeding, and it is being returned to the third party requester ***without consideration of the substance of the petition***. As the papers have been entered into the electronic Image File Wrapper (IFW) record, the papers will be "returned" by closing the papers in the IFW, and marking the papers nonpublic to expunge it from the record. The present decision will, however, be made of record in the reexamination proceeding. See also MPEP 2667.

CONCLUSION

1. The requester's petition under 37 CFR 1.181, filed January 4, 2012, is **dismissed** as untimely and improper for the reasons discussed above. The petition is **returned** to the third party requester with this decision as not having a right of entry.

2. No copy of the petition papers will be maintained in the electronic Image File Wrapper for the proceedings, or elsewhere in the Office.

3. A copy of this decision will be made of record in the reexamination file.

4. Telephone inquiries related to this decision should be directed to Andres Kashnikow, Supervisory Patent Examiner, at (571) 272-4361.

Irem Yucel, Director
Central Reexamination Unit

UNITED STATES PATENT AND TRADEMARK OFFICE

Commissioner for Patents
United States Patent and Trademark Office
P.O. Box 1450
Alexandria, VA 22313-1450
www.uspto.gov

MAILED

JAN 12 2012

CENTRAL REEXAMINATION

Attn: Kevin B. Laurence
Stoel Rives LLP –SLC
One Utah Center
Salt Lake City, UT 84111

(For Patent Owner)

Attn: James F. Vaughan
Womble Carlyle Sandridge & Rice LLP
P.O. Box 7037
Atlanta, GA 30357-0037

(For Third Party Requester)

In re Hartzell *et al.*
Inter Partes Reexamination Proceeding
Control No. 95/001,639
Filed: June 2, 2011
For: U.S. Patent No. 6,979,482 B2

: **DECISION**
: **DISMISSING PETITION**
: **UNDER 1.183**

This is a decision on the January 4, 2012 third party requester petition entitled "PETITION UNDER 37 C.F.R. § 1.183."

The third party requester petition is before the Office of Patent Legal Administration.

The petition is **dismissed**.

BACKGROUND

- On June 2, 2011, a request for *inter partes* reexamination of U.S. Patent Number 6,979,482 B2 was filed by the third party requester, and the resulting reexamination proceeding was assigned control number 95/001,639 ("the '1639 proceeding").

- On July 15, 2011, reexamination was ordered and a first action, an action closing prosecution ("ACP") confirming all claims under reexamination, was mailed in the proceeding.

- Prosecution progressed, until, on October 21, 2011, a Right of Appeal Notice was mailed by the Office, setting a time period for filing of an appellant's brief to run the longer of 1 month or thirty days from the date of the Right of Appeal Notice.

- On November 15, 2011, third party requester filed a Notice of appeal.

- On January 4, 2012, third party requester filed two petitions; the first entitled "PETITION TO REOPEN PROSECUTION;" the second entitled "PETITION UNDER

37 C.F.R. § 1.183." The latter petition, seeking an extension of time to file third party requester's appellant's brief, is the subject of this decision.

PERTINENT REGULATIONS

37 C.F.R. § 1.183 provides:

> In an extraordinary situation, when justice requires, any requirement of the regulations in this part which is not a requirement of the statutes may be suspended or waived by the Director or the Director's designee, sua sponte, or on petition of the interested party, subject to such other requirements as may be imposed. Any petition under this section must be accompanied by the petition fee set forth in § 1.17(f).

37 C.F.R. § 1.181(f) provides, in pertinent part:

> The mere filing of a petition will not stay any period for reply that may be running against the application, nor act as a stay of other proceedings.

37 C.F.R. § 41.66(a) provides:

> An appellant's brief must be filed no later than two months from the latest filing date of the last-filed notice of appeal or cross appeal or, if any party to the proceeding is entitled to file an appeal or cross appeal but fails to timely do so, no later than two months from the expiration of the time for filing (by the last party entitled to do so) such notice of appeal or cross appeal. The time for filing an appellant's brief or an amended appellant's brief may not be extended.

DECISION

Third party requester petitioner filed the instant petition to waive § 41.66(a) either entirely, or to extent that the time to file an appellant's brief would be reset to run from the date of the decision dismissing the petition. Petitioner states that such waiver would prevent the unnecessary expenditure of resources by the party in briefing the proceeding should the Rule §§ 1.181/1.182 petition be granted. However, on the same date as the instant decision, the Office dismissed the January 4, 2012 petition filed under §§ 1.181 and 1.182. Therefore, any resources expended in briefing the proceeding will not be mooted by the granting of that petition.

With respect to the request for a two month time period to be granted from the mailing date of the decision on the §§ 1.181 and 1.182 petition, § 1.181(f) states that the mere filing of a petition will not stay any period for reply. Therefore, petitioner has no reasonable basis to expect that, absent a grant of the §§ 1.181/1.182 petition, the time for filing the appeal brief would be extended in the absence of a showing of extraordinary circumstances under § 1.183. Petitioner has not presented any reasoning supporting a finding of extraordinary situations in this

proceeding such that an additional two months would be required in the interests of justice for petitioner to file the appellant's brief.

For the foregoing reasons, the instant petition is dismissed. The time period for appellant's brief continues to run as set forth in § 41.66(a); specifically, two months from the latest filing date of the last-filed notice of appeal of November 15, 2011; i.e., through January 15, 2012.[1]

CONCLUSION

- The petition is **dismissed**.
- The time period for appellant's brief continues to run as set forth in § 41.66(a); specifically, two months from the latest filing date of the last-filed notice of appeal of November 15, 2011; i.e., through January 15, 2012.
- Any inquiry concerning this decision should be directed to Michael Cygan, Legal Advisor, at (571) 272-7700.

/Michael Cygan/

Michael Cygan
Legal Advisor
Office of Patent Legal Administration

January 12, 2012

[1] Note that the patent owner is not "entitled to file an appeal or cross-appeal," since 37 C.F.R. § 41.61 states that a patent owner may file an appeal or cross-appeal "with respect to the final rejection of any claim of the patent." In the instant proceeding, no claim is under final rejection, as set forth in the September 2, 2010 Right of Appeal Notice. Also note that a paper filed on Tuesday, January 17th will be accepted as timely, as that is the first business day following the due date, which falls on a Sunday.

UNITED STATES PATENT AND TRADEMARK OFFICE

Commissioner for Patents
United States Patent and Trademark Office
P.O. Box 1450
Alexandria, VA 22313-1450
www.uspto.gov

STOEL RIVES LLP- SLC
201 SOUTH MAIN STREET, SUITE 1100
ONE UTAH CENTER
SALT LAKE CITY, UT 84111

(FOR PATENT OWNER)

MAILED

JAN 12 2012

CENTRAL REEXAMINATION UNIT

WOMBLE CARLYLE SANDRIDGE
& RICE, PLLC
ATTN: IP DOCKETING
P.O. BOX 7037
ATLANTA, GA 30357-0037

(FOR THIRD PARTY
REQUESTER)

In re Hartzell et al.
Reexamination Proceeding
Control No. : 95/001,639
Filed: June 2, 2011
Patent No. 6,979,482

: DECISION ON
: PETITION
: UNDER 37 CFR 1.181

This is a decision addressing third party requester's petition, dated January 4, 2012, entitled "PETITION TO REOPEN PROSECUTION."

The petition is before the Director of the Central Reexamination Unit for decision.

SUMMARY

The third party requester's January 4, 2012 petition is DISMISSED as untimely and RETURNED as improper for the reasons set forth below, without consideration of the merits.

Brief Statement of Relevant Facts

1. Patent No. 6,979,482 (the '482 patent) issued on December 27, 2005.

2. A request for reexamination, assigned Control No. 95/001,639 (the '639 proceeding), was filed by a Third Party Requester on June 2, 2011.

3. Reexamination was ordered in the '639 reexamination proceeding on July 15, 2011.

4. An Action Closing Prosecution (ACP) was mailed on the same day, July 15, 2011. The ACP confirmed the patentability of claims 1-16 of the '482 patent. The ACP found that Sullivan did not teach fin strips connected to the bag seal zone. See, e.g., page 4 of the ACP.

5. The patent owner did not file a response to the July 15, 2011 ACP.

6. On October 21, 2011, a Right of Appeal Notice (RAN) was mailed. The RAN maintained the confirmation of claims 1-16 as set forth in the ACP.

7. On November 15, 2011, the third party requester filed a Notice of Appeal.

8. On January 4, 2012, the third party requester filed the petition under 37 CFR 1.181 and/or 1.182 ("the petition"). The requester also filed a petition under 37 CFR 1.183, which will be addressed in a separate decision in due course.

Discussion

The third party requester (petitioner) requests that prosecution be reopened. Specifically, petitioner requests a new Office action that adopts the proposed rejection based on Sullivan and various secondary references. The petitioner argues that the ACP, dated July 15, 2011, has different factual findings regarding the teachings of Sullivan than the ACP issued in related reexamination proceeding 95/001,640. See pages 2-4 of the petition.

The request to reopen prosecution is dismissed as untimely and returned as improper.

Statement of Relevant Authority

37 CFR 1.181(f) states:

> The mere filing of a petition will not stay any period for reply that may be running against the application, nor act as a stay of other proceedings. Any petition under this part not filed within **two months** of the mailing date of the action or notice from which relief is requested may be dismissed as untimely, except as otherwise provided. **This two-month period is not extendable.** (Emphasis added.)

...

Decision

Although the January 4, 2012 petition contains statements that an alternative relief under 37 CFR 1.182 is sought, the petition is being decided solely under 37 CFR 1.181. In other words, the requester's combined petition under 37 CFR 1.181 and 1.182 is deemed improper because it combines two distinct petitions, which is not compliant with 37 CFR 1.4. Therefore, any requested relief under 37 CFR 1.182 is procedurally dismissed under 37 CFR 1.4. In summary, this decision solely addresses the issues raised under 37 CFR 1.181, e.g., whether the examiner followed the laws and procedures in closing prosecution.

The petition treated under 37 CFR 1.181 requests that prosecution be reopened. The petitioner filed the petition on January 4, 2012. The action from which relief is requested is the Action Closing Prosecution, which was mailed on July 15, 2011. Therefore, the petition was filed over **two** months from the mailing date of the action (July 15, 2011) from which relief is requested. As quoted above, 37 CFR 1.181(f) requires petitions under that section be filed within **two** months from the mailing date of the action from which relief is requested and that such time period is not extendable.

Therefore, the petition is dismissed as untimely because it was not filed within the two month time period required by 37 CFR 1.181(f).

In addition, the petition is improper. The basis for reopening prosecution presented in the petition (e.g., disagreement on Sullivan's teachings) address the merits of the examiner's determination, which is an appealable (and not petitionable) issue. See MPEP 1201 and 1002. Therefore, the petition fails to raise any issue that can be addressed by a petition filed under 37 CFR 1.181 (e.g., supervisory review of whether the examiner followed Office regulations and policies in issuing the Office action). Accordingly, the petition is deemed an improper paper and will be returned in accordance with 37 CFR 1.939 and MPEP 2667.

In view of the above, the petition in the reexamination proceeding does not have an entry right under the rules. Therefore, the petition and its supporting exhibit will not be made of record in the '639 reexamination proceeding, and it is being returned to the third party requester ***without consideration of the substance of the petition***. As the papers have been entered into the electronic Image File Wrapper (IFW) record, the papers will be "returned" by closing the papers in the IFW, and marking the papers nonpublic to expunge it from the record. The present decision will, however, be made of record in the reexamination proceeding. See also MPEP 2667.

CONCLUSION

1. The requester's petition under 37 CFR 1.181, filed January 4, 2012, is **dismissed** as untimely and improper for the reasons discussed above. The petition is **returned** to the third party requester with this decision as not having a right of entry.

2. No copy of the petition papers will be maintained in the electronic Image File Wrapper for the proceedings, or elsewhere in the Office.

3. A copy of this decision will be made of record in the reexamination file.

4. Telephone inquiries related to this decision should be directed to Andres Kashnikow, Supervisory Patent Examiner, at (571) 272-4361.

Irem Yucel, Director
Central Reexamination Unit

UNITED STATES PATENT AND TRADEMARK OFFICE

UNITED STATES DEPARTMENT OF COMMERCE
United States Patent and Trademark Office
Address: COMMISSIONER FOR PATENTS
P.O. Box 1450
Alexandria, Virginia 22313-1450
www.uspto.gov

APPLICATION NO.	FILING DATE	FIRST NAMED INVENTOR	ATTORNEY DOCKET NO.	CONFIRMATION NO.
95/001,641	06/06/2011	7,249,372	ESP.1555.REEX	1160

22885 7590 03/22/2012

MCKEE, VOORHEES & SEASE, P.L.C.
801 GRAND AVENUE
SUITE 3200
DES MOINES, IA 50309-2721

EXAMINER	
ART UNIT	PAPER NUMBER

DATE MAILED: 03/22/2012

Please find below and/or attached an Office communication concerning this application or proceeding.

UNITED STATES PATENT AND TRADEMARK OFFICE

Commissioner for Patents
United States Patents and Trademark Office
P.O.Box 1450
Alexandria, VA 22313-1450
www.uspto.gov

DO NOT USE IN PALM PRINTER

THIRD PARTY REQUESTER'S CORRESPONDENCE ADDRESS
ZIEGLER IP LAW GROUP, LLC.
518 RIVERSIDE AVENUE
BUILDING B (SYNERGY)
WESTPORT, CT 06880

Date:

MAILED

MAR 2 2 2012

CENTRAL REEXAMINATION UNIT

Transmittal of Communication to Third Party Requester
Inter Partes Reexamination

REEXAMINATION CONTROL NO. : 95001641
PATENT NO. : 7249372
TECHNOLOGY CENTER : 3999
ART UNIT : 3992

Enclosed is a copy of the latest communication from the United States Patent and Trademark Office in the above identified Reexamination proceeding. 37 CFR 1.903.

Prior to the filing of a Notice of Appeal, each time the patent owner responds to this communication, the third party requester of the inter partes reexamination may once file written comments within a period of 30 days from the date of service of the patent owner's response. This 30-day time period is statutory (35 U.S.C. 314(b)(2)), and, as such, it cannot be extended. See also 37 CFR 1.947.

If an ex parte reexamination has been merged with the inter partes reexamination, no responsive submission by any ex parte third party requester is permitted.

All correspondence relating to this inter partes reexamination proceeding should be directed to the Central Reexamination Unit at the mail, FAX, or hand-carry addresses given at the end of the communication enclosed with this transmittal.

MAILED

MAR 22 2012

CENTRAL REEXAMINATION UNIT

UNITED STATES PATENT AND TRADEMARK OFFICE

Commissioner for Patents
United States Patent and Trademark Office
P.O. Box 1450
Alexandria, VA 22313-1450
www.uspto.gov

McKEE, VOORHEES, & SEASE, PLC : (For Patent Owner)
801 GRAND AVENUE :
DES MOINES, IA 50309-2721 :

ZIEGLER IP LAW GROUP : (For Third-Party Requester)
518 RIVERSIDE AVENUE, SYNERGY BUILDING :
WESTPORT, CT 06880 :

In re Bonstetter : DECISION ON PETITION
Reexamination Proceeding : ON ORDER DENYING
Control No. 95/001641 : *INTER PARTES* REEXAM
Request Deposited: June 6, 2011
For: U.S. Patent No.7,249,372

This is a decision on the petition filed on September 22, 2011 by which Third Party Requester requests review of the Order Denying the Request for reexamination of claims 1-11 of US Patent No 7,249,372 under 37 CFR 1.927. The petition is considered pursuant to 37 CFR 1.181; No fee is required.

The petition is **DENIED** for the reasons set forth below.

REVIEW OF RELEVANT FACTS

1. U.S. Patent No. 7,249,372 ("'372 patent") issued on July 24, 2007 to Bonstetter et al.

2. A request for *ex parte* reexamination was filed January 14, 2011 and assigned control no. 90/011434. The Third Party Requester alleged that a substantial new question of patentability was raised with respect to claims 1-11 by a number of prior art references.

3. A request for *inter partes* reexamination was filed June 6, 2011 and assigned control no. 95/001,641. The Third Party Requester alleged that substantial question of patentability was raised with respect to claims 1-11 by several additional of prior art references.

4. The examiner denied the *inter partes* request in an order mailed August 22, 2011. The basis for the denial was the examiner's determination that the references did not provide any new technological teachings that raises substantial new question of patentability relative to the claims proposed for reexamination.

5. The instant petition was timely filed on September 22, 2011 by the Third Party Requester ("Petitioner"). The petition requests *de novo* review of the Request for *Inter Partes* Reexamination to determine whether a Substantial Question of Patentability has been raised.

DISCUSSION

Standard of Review

37 CFR § 1.927 provides for the filing of a petition under 37 CFR § 1.181 to review an examiner's determination refusing to order *inter partes* reexamination. The CRU Director's review on petition is *de novo.*

The Legal Standard for Ordering Reexamination

A review of 35 U.S.C. §§ 311 and 312 reveals that, by statute, *inter partes* reexamination of a United States Patent is only authorized when a consideration of prior art consisting of patents or printed publications establishes that a substantial new question of patentability exists with respect to one or more claims of that patent. 35 U.S.C. § 311 requires that a request for *inter partes* reexamination be based upon prior art as set forth in 35 U.S.C. § 301, that is, prior art consisting of patents or printed publications, while 37 CFR 1.915(b)(3) requires that a request for inter partes reexamination include "A statement pointing out each substantial new question of patentability based on the cited patents and printed publications." A substantial question of patentability is raised by a cited patent or printed publication when there is a substantial likelihood that a reasonable examiner would consider the prior art patent or printed publication important in deciding whether or not the claim is patentable. If the prior art patents and printed Publications relied upon in the request raise a substantial question of patentability, then a "substantial new question of patentability" is present, unless the same question of patentability has already been decided by a final court holding of invalidity after all appeals, or by the Office in an earlier examination or in a reexamination of a patent. That is, the requester must "demonstrate that a patent or printed publication that is relied upon in a proposed rejection presents a new, non-cumulative technical teaching that was not previously considered and discussed on the record during the prosecution of the application that resulted in the patent for which reexamination is

requested, and during the prosecution of any other prior proceeding involving the patent." MPEP § 2616. If a substantial new question of patentability is found to be raised, an order granting inter partes reexamination of the patent is issued.

Pertinent Prosecution History of the '372 Patent

1. The '372 patent was filed as application number 09/760145 on January 12, 2001 39 claims.

2. The examiner issued non-final rejections on December 9, 2004 and June 27, 2005, rejecting all of the claims.

3. After receiving the two rejections, the applicant on October 27, 2005 amended claims 28, and 35 and introduced claim 40. The new claims all contained the limitation of providing an assessment survey or a password having a set of permissions ... for an assessment survey:

> "which gauges an individual potential employee's suitability with regards to a particular job, an individual existing employee's suitability or performance with regards to a particular job, or an individual boss's performance with regards to a particular job.

4. On January 12, 2006, the examiner made a final rejection rejecting all of claims 1-40 on the basis of the Dirksen et al patent, US Patent 6,853,975.

5. On April 12, 2006, the applicant submitted a declaration under 37 CFR 1.131 swearing behind the Dirksen reference.

6. As a result, on October 19, 2006, the examiner issued a new non-final rejection of claims 1-27 and 29-30. Claims 28 and 31-40 were indicated to be allowable with the following reasons for allowance:

> "As to independent claims 28, 35 and 40 prior art does not disclose, teach or suggest a password having a set of permissions correlated to a respondent for an assessment survey which gauges an individual potential employee's suitability with regards to a particular job, an individual existing employee's suitability or performance, with regards to a particular job, or an individual boss's performance with regards to a particular job."

7. On December 22, 2006, the applicant submitted an amendment, cancelling claims 1-27, 29, and 30.

8. On March 21, 2007, the examiner issued a notice of allowance. Included with the notice of allowance was a USPTO form 892, notice of references cited, which cited, for the first time during prosecution, document WO 00/55792 to Howard et al. The examiner included the following reason for allowance with the notice of allowance:

> "The closest prior art to the current application is Howard et al WO 00/55792 (hereinafter Howard). Howard is directed towards a performance review and job description system that allows users to create professional job descriptions and employee performance reviews across the Internet. Howard teaches a performance review module and a job description, module and places the applications online through a content or Web server. Access to each module is through a Universal Resource Locator (URL) that points to the content server and sessions are kept open until the user receives his completed document. Howard discloses that the user's company information is determined using the entry point URL. Company data and custom theme data are retrieved from the content sever databases. The company's Performance Now homepage is presented to the user containing the menu options for writing a review or entering/updating user information. When the user selects the desired option, the appropriate login page is presented to the user. The user logs onto the content server using his ID and password or name and email address. The user's ID is verified and the appropriate privileges,
> session variables and defaults are set [page 15].
>
> However, the Howard reference differs from the current application in several aspects. **Howard does not disclose initializing permissions relative to the password based on the level of rights for the entity. Howard does not disclose the permissions including at least one respondent password having permissions based on the level of rights for a respondent. Howard does not disclose sending the assessment report to one or more locations authorized by the permissions**. Howard discloses setting appropriate privileges, but they are not initialized relative to the password. Howard discloses setting up request for feedback is accomplished in the Performance Appraiser and is user specific. In other words, the user will select the Multi-Rater option to gather feedback and will specify from whom on a review-by-review basis. Additionally, the user can create and retain a "buddy list" of other users that he frequently requests feedback information from [page 16]. This disclosure teaches being able to send an assessment report to one or more locations, but it does not disclose that this is authorized by the permissions set by the password." (emphasis added)

9. The request for *ex parte* reexamination of the '372 patent was filed as application control number 90/011434 on January 14, 2011 and a corrected request was filed on April 4, 2011, requesting reexamination of claims 1-11.

10. The request noted the key features in the '372 at the time of allowance:

> "In the Notice of Allowance of Bonnstetter dated March 21, 2007, Howard et al (WO 00/55792, "Howard") is identified as the closest prior art. In the Notice, claims 28 and 31-40 (now patented claims 1-11) were allowed in light of key limitations of the claims of Bonnstetter that were not found in the disclosure of Howard. The statement of reasons for
> allowance noted that, "Howard differs from the current application in several aspects." **Specifically, the Notice of Allowance states, "Howard does not disclose initializing permissions relative to the password based on the level of rights for the entity. Howard does not disclose the permissions including at least one respondent password having permissions based on the level of rights for a respondent. Howard does not disclose sending the assessment report to one or more locations authorized by the permissions."** (Request, page 2, emphasis added.

11. In the request, the requester asserted that existence new technological teachings that raise a substantial new question of patentability based on the following references, WO 99/59093 to Teknekron Infoswitch Corporation (hereinafter "Teknekron"), WO/9933016 to Charles Wong (hereinafter "Wong"), and two US patents 6,524,109 and 6,735,570 to Lacy et al (Lacy '109 and Lacy '570), which were used in combination with Teknekron

12. Specifically, with respect to Teknekron, the request stated that:

> "Teknekron clearly discloses key limitations cited in support of the allowance of claims 1-11 of Bonnstetter.
>
> a. Teknekron teaches **"initializing permissions relative to the password based on the level of rights for the entity,"** and "the permissions including at least one respondent password having permissions based on the level of rights for a respondent." Teknekron discloses privilege tables 84 which assign each user a view and a class of services. "The view specifies the levels and members of an organizational structure to which the user is allowed access. The class of services specifies the services of the performance evaluation system 10 that the user is allowed to perform." (page 15, lines 21-27) Teknekron also teaches that the "user has access privileges to perform services within the user's class of services for levels and members within the user's view. In this way, access privileges may be easily updated and maintained for the user in response to changes in allowed services or organizational structure. As a result, system administration cost is reduced." (page 4, lines 25-27)

b. Teknekron teaches **"sending the assessment report to one or more locations authorized by the permissions."** Teknekron discloses privilege tables 84 that assign a view and a class of services to each user. Thus, a manager may have access to view the reports and charts for all users that report to him. The services allowed to each user are predetermined by a level of the user. Teknekron also discloses a class of service assignment table 142 that "assigns a class of service template to a user. In the class of service assignment table 142, a first field
identifies the user by the user ID and a second field identifies the class of service template by a service template ID...For example, for the call center 100 of FIGURE 2, group and team templates may be defined and associated with the group and team managers, respectively... The services are predefined for the performance evaluation system 10. In a particular embodiment, the services may include administer productivity values, administer productivity data elements, **access charting and reporting and administer filters..."** (page 17, lines 24-35; page 18, lines 13-24)" (Request pages 2-3, emphasis added).

13. Specifically, with respect to Wong, the request stated that:

"Wong clearly discloses the limitations set forth in the Notice of Allowance in support of the allowance of the claim 1 of Bonnstetter.

a. Wong teaches, **"initializing permissions relative to the password based on the level of rights for the entity,"** and **"the permissions including at least one respondent password having permissions based on the level of rights for a respondent."** (Page 95, lines 6-10; Page 103, line 35; Fig. 45A)

b. Wong also teaches, **"sending the assessment report to one or more locations authorized by the permissions."** (Page 75, lines 18-26)" (Request pages 3-4, emphasis added).

6. On the basis of this request, the examiner granted request for *ex parte* reexamination in the order of April 25, 2011, agreeing that the technological teachings of Teknekron, Lacy '109, Lacy '570 in combination with Lacy '109 and Teknekron, and Wong all raise a substantial new question of patentability with respect to claims 1-11 of the '372 patent.

Pertinent Prosecution History of *Inter Partes* Reexamination 95/001641

14. The request for *inter partes* reexamination of the '372 patent was filed as application control number 95/001641 on June 6, 2011, requesting reexamination of claims 1-11.

15. In the request, the requester asserted that existence new technological teachings that raise a substantial new question of patentability based on the following references, Sonnenfeld - US Patent 6,112,049, Williams - US Patent 6,873,964, Kershaw - US Patent 5,565,316, and Ibarra – US Patent 6,119,097 in combination with Broomhall – US Patent 6,292,904.

16. The request summarized the prosecution history of the '372 patent, noting that:

> In the Notice of Allowance of the '372 Patent, mailed March 21, 2007, the Examiner identifies WO 00/55792 ("Howard") as the closest prior art. Claims 28 and 31-40 (now patented claims 1-11) were allowed. In the statement of Allowable Subject Matter in the Notice of Allowance, on page 3, second paragraph, the Examiner states that the "Howard reference differs from the current application in several aspects." In particular, the Examiner states that:
>
> 1) "Howard does not disclose **initializing permissions relative to the password based on the level of rights for the entity.**"
>
> 2)Howard does not disclose **the permissions including at least one respondent password having permissions based on the level of rights for a respondent.**"
>
> 3) "Howard does not disclose **sending the assessment report to one or more locations authorized by the permissions.**"
>
> 4) "This disclosure teaches being able to send an assessment report to one or more locations, but it **does not disclose that this is authorized by the permissions set by the password.**"
>
> (Notice of Allowance, page 3, line 15 to page 4, line 5, emphasis added).
>
> In the Office Action mailed October 19, 2006, claims 28 and 31-40 were, for the first time, indicated as being allowable. Claims 1-27, 29 and 30 were rejected. Claims 1-27, 29 and 30 were subsequently cancelled. The reason for the allowable subject matter was that "as to independent claims 28, 35 and 40 prior art does not disclose, teach or **suggest a password having a set of permissions correlated to a respondent for an assessment survey** which gauges an individual potential employee's suitability with regards to a particular job, an individual existing employee's suitability or performance, with regards to a particular job, or an individual boss's performance with respect to a particular job." (page 11, numbered paragraph 13 of Office Action mailed October 19, 2006, emphasis added.)" (Request pages 5-6).

17. The request goes further on pages 7-8, where it states that the key deficiencies of Howard were

> a) "Howard does not disclose **initializing permissions relative to the password based on the level of rights for the entity.**"
>
> b) Howard does not disclose **the permissions including at least one respondent password having permissions based on the level of rights for a respondent.**"
>
> c) "Howard does not disclose **sending the assessment report to one or more locations authorized by the permissions.**"
>
> d) "This disclosure teaches being able **to send an assessment report to one or more locations,** but it does not disclose that this **is authorized by the permissions set by the password.**"
>
> These limitations, which the Examiner states the prior art cited during the original prosecution failed to disclose, can be found in the following new prior art references, which therefore raise substantial new questions of patentability of claims 1-11.

18. The request then proceeds to show on pages 8-12 how the technological teachings of each of the cited references or combination of references raise an SNQ by teaching the features deficient in Howard.

19. On August 22, 2011, the examiner denied the request for reexamination, stating the only alleged differences regarding the basis for the SNQ between this reexamination and reexamination control number 90/011434 is item "d" listed in paragraph 17 above. The examiner found that this was merely a summary statement of items "a-c". Thus, the examiner found that the request only presented issues that have been previously considered and were the basis of the SNQ for the co-pending reexamination. Therefore, the examiner concluded that the proposed prior art in this reexamination did not raises a second SNQ, over and above, those already under consideration in the co-pending reexamination.

Contentions of Requester in the Petition

20. On September 22, 2011, the requester filed the instant petition under 37 C.F.R. 1.181 for review of the denial of the request.

21. Petitioner contends that the when considering the substantial new question of patentability, the examiner only focused on the deficiencies of Howard that were noted in the reasons for allowance that accompanied the notice of allowance in the '372 patent.

22. Petitioner contends, however, that when the examiner originally allowed claims 28 and 31-40, the reasons for allowance include:

> "a password having a set of permissions correlated to a respondent for an assessment survey which gauges an individual potential employee's

> suitability with regards to a particular job, an individual existing employee's suitability or performance, with regards to a particular job, or an individual boss's performance with respect to a particular job"[1], (see request page 16).

23. According to Petitioner, the examiner erred in focusing only on the deficiencies of Howard indicated at the time of allowance and not on the previous statement of allowability for claims 28, 35, and 40 in determining whether a new SNQ was raised.

24. Finally, Petitioner asserts that the teachings of the newly cited prior art raises a substantially new question of patentability above that in the co-pending reexamination, because each reference or combination of references provide a teaching of the feature cited in paragraph 3 above, which was not addressed in the co-pending reexamination.

Analysis

25. The standard for raising a substantial new question of patentability is articulated in MPEP 2616. Specifically, MPEP 2616 states:

> It is not sufficient that a request for reexamination merely proposes one or more rejections of a patent claim or claims as a basis for reexamination. It must first be demonstrated that a patent or printed publication that is relied upon in a proposed rejection presents a new, non-cumulative technological teaching that was not previously considered and discussed on the record during the prosecution of the application that resulted in the patent for which reexamination is requested, and during the prosecution of any other prior proceeding involving the patent for which reexamination is requested. See also MPEP § **2642**.

26. MPEP 2642 further holds that:

> If the prior art patents and printed publications raise a substantial question of patentability of at least one claim of the patent, then a substantial new question of patentability is present, unless the same

[1] The petition alleges that the language "a password having a set of permissions correlated to a respondent for an assessment survey" .... was added to claims 28, 35, and 40 on October 25, 2005. This language was added to claim 35. Claims 28 and 40 contain the language "providing an assessment instrument to the respondent" and "providing an assessment instrument," respectively.

> question of patentability has already been decided by (A) a final holding of invalidity, after all appeals, or (B) by the Office in a previous examination or pending reexamination of the patent. A "previous examination" of the patent is: (A) the original examination of the application which matured into the patent; (B) the examination of the patent in a reissue application that has resulted in a reissue of the patent; or (C) the examination of the patent in an earlier pending or concluded reexamination.

27. As to a second or subsequent reexamination, MPEP 2642 states:

> Where a >second or subsequent< request for reexamination of a patent is made before the conclusion of an earlier filed reexamination proceeding pending (ongoing) for that patent, **>the second or subsequent request for reexamination may provide information raising a substantial new question of patentability with respect to any new or amended claim which has been proposed under 37 CFR **1.530(d)** in the ongoing pending reexamination proceeding. However, in order for the second or subsequent request for reexamination to be granted, the second or subsequent requester must independently provide a substantial new question of patentability which is **different from** that raised in the pending reexamination for **the claims in effect at the time of the determination.** The decision on the second or subsequent request is thus based on the claims in effect at the time of the determination (37 CFR **1.923**). If a "different" substantial new question of patentability is not provided by the second or subsequent request for the claims in effect at the time of the determination, the second or subsequent request for reexamination must be denied since the Office is only authorized by statute to grant a reexamination proceeding based on a substantial new question of patentability "affecting any claim of the patent." See 35 U.S.C. **312**. Accordingly, there must be at least one substantial new question of patentability established for the existing claims in the patent in order to grant reexamination.

28. As such, it is clear that in order for a second or subsequent request for reexamination to raise a substantial new question of patentability, the second or subsequent request must provide a teaching of a new technological feature that is different from the teachings present in both the original prosecution and the previous reexamination(s).

29. Here, as the new, non-cumulative feature in the current request, the Petitioner points to the language provided by the examiner in the office action of October 19, 2006 for the allowance of claims 28 and 31-40, where it stated that claims 28, 35, and 40 were allowable because the prior art does not disclose, teach or suggest a password having a set of permissions correlated to a respondent for an assessment survey which gauges an individual potential employee's suitability with regards to a particular job, an individual existing employee's suitability or performance, with regards to a particular job, or an individual boss's performance with regards to a particular job.

30. On October 19, 2006, when the examiner issued the office action with the statement of reasons for allowance, the Howard reference was not of record. Accordingly, the teachings contained in Howard were not considered when making the statement of reasons for allowance.

31. When the examiner issued the final notice of allowance, Howard was newly cited and the new reasons for allowance was issued.

32. Examination of the Howard reference reveals that it is an assessment instrument for assessing an existing employee's performance in regards to a specific job (see, for example, abstract and title).

33. As such, when issuing the notice of allowance, it is reasonable to conclude that the examiner revised the reasons for allowance in view of the Howard reference, since Howard taught what was previously indicated to be the allowable feature.

34. Therefore, at present, it is not sufficient to allege that the new prior art teaches the feature indicated to be allowable on October 19, 2006, as that feature was present in the case at the time of allowance. Therefore, that feature cannot be considered to be a **new, non-cumulative** teaching.

35. In addition, the request does not mention the limitation as to the details of the assessment report. Rather, in discussing the art, the request merely maps the prior art to the features found to be deficient in Howard. The statement of the SNQ must be complete in the request. Petitioner cannot add new information in the petition after-the-fact to bolster the request.

36. As such, the request of 6/6/2011 does not provide a new, non-cumulative technological teaching different from both the '372 Patent prosecution and the co-pending reexamination. Therefore, the denial of the request was proper.

CONCLUSION

1. Based on a *de novo* review of the record as a whole, the petition is **DENIED.**

2. **All** correspondence relating to this *inter partes* reexamination proceeding should be directed:

By EFS: Registered users may submit via the electronic filing system EFS-Web, at https://efs.uspto.gov/efile/myportal/efs-registered

By Mail to: Mail Stop *Inter Partes* Reexam
Central Reexamination Unit
Commissioner for Patents
United States Patent & Trademark Office
P.O. Box 1450
Alexandria, VA 22313-1450

By FAX to: (571) 273-9900
Central Reexamination Unit

By hand: Customer Service Window
Randolph Building
401 Dulany Street
Alexandria, VA 22314

For EFS-Web transmissions, 37 CFR 1.8(a)(1)(i) (C) and (ii) states that correspondence (except for a request for reexamination and a corrected or replacement request for reexamination) will be considered timely filed if (a) it is transmitted via the Office's electronic filing system in accordance with 37 CFR 1.6(a)(4), and (b) includes a certificate of transmission for each piece of correspondence stating the date of transmission, which is prior to the expiration of the set period of time in the Office action.

3. Telephone inquiries related to this decision should be directed to Alexander Kosowski, at (571) 272-3744, Mark Reinhart, at (571) 272-1611 or Sudhanshu Pathak at (571) 272-5509.

This decision is final and nonappealable. See 37 CFR 1.927. No further communication on this matter will be acknowledged or considered.

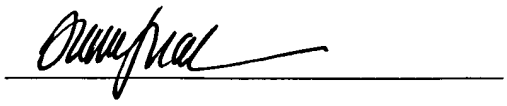

Irem Yucel
Director, Central Reexamination Unit

UNITED STATES PATENT AND TRADEMARK OFFICE

UNITED STATES DEPARTMENT OF COMMERCE
United States Patent and Trademark Office
Address: COMMISSIONER FOR PATENTS
P.O. Box 1450
Alexandria, Virginia 22313-1450
www.uspto.gov

APPLICATION NO.	FILING DATE	FIRST NAMED INVENTOR	ATTORNEY DOCKET NO.	CONFIRMATION NO.
95/001,650	06/08/2011	7955733	112903-319US1	4845

67376 7590 03/16/2012

Patent Department
Baker Botts, L.L.P.
One Shell Plaza
910 Louisiana
Houston, TX 77002

EXAMINER	
ART UNIT	PAPER NUMBER

DATE MAILED: 03/16/2012

Please find below and/or attached an Office communication concerning this application or proceeding.

UNITED STATES PATENT AND TRADEMARK OFFICE

Commissioner for Patents
United States Patents and Trademark Office
P.O.Box 1450
Alexandria, VA 22313-1450
www.uspto.gov

DO NOT USE IN PALM PRINTER

THIRD PARTY REQUESTER'S CORRESPONDENCE ADDRESS
WILMERHALE/A123
60 STATE STREET
BOSTON, MA 02109

Date: MAILED

MAR 16 2012

CENTRAL REEXAMINATION UNIT

Transmittal of Communication to Third Party Requester
Inter Partes Reexamination

REEXAMINATION CONTROL NO. : 95001650
PATENT NO. : 7955733
TECHNOLOGY CENTER : 3999
ART UNIT : 3991

Enclosed is a copy of the latest communication from the United States Patent and Trademark Office in the above identified Reexamination proceeding. 37 CFR 1.903.

Prior to the filing of a Notice of Appeal, each time the patent owner responds to this communication, the third party requester of the inter partes reexamination may once file written comments within a period of 30 days from the date of service of the patent owner's response. This 30-day time period is statutory (35 U.S.C. 314(b)(2)), and, as such, it cannot be extended. See also 37 CFR 1.947.

If an ex parte reexamination has been merged with the inter partes reexamination, no responsive submission by any ex parte third party requester is permitted.

All correspondence relating to this inter partes reexamination proceeding should be directed to the Central Reexamination Unit at the mail, FAX, or hand-carry addresses given at the end of the communication enclosed with this transmittal.

United States Patent and Trademark Office

Commissioner for Patents
United States Patent and Trademark Office
P.O. Box 1450
Alexandria, VA 22313-1450
www.uspto.gov

Patent Department
Baker Botts, L. L. P.
One Shell Plaza
910 Louisiana
Houston, TX 77002

(For Patent Owner)

MAILED

MAR 16 2012

CENTRAL REEXAMINATION UNIT

WilmerHale/A123
60 State Street
Boston, MA 02109

(For Requester)

In re Armand et al
Inter Partes Reexamination Proceeding
Control No. 95/001,650
Filed: June 8, 2011
For: U.S. Patent No.: 7,955,733

DECISION DISMISSING PETITION TO TERMINATE *INTER PARTES* REEXAMINATION PROCEEDING

This is a decision on patent owner's November 18, 2011, March 6, 2012, and March 8, 2012 papers, entitled, respectively, "Notification of Prior and Concurrent Proceedings and Petition", "Supplemental Notification of Prior and Concurrent Proceedings and Petition", and "Second Supplemental Notification of Prior and Concurrent Proceedings and Petition", which are taken together as a petition under 37 CFR 1.182 to terminate the present proceeding (the November 18, 2011 petition to terminate).

The November 18, 2011 petition to terminate, and the record as a whole, are before the Office of Patent Legal Administration for consideration.

SUMMARY

Patent owner's petition under 37 CFR 1.182 to terminate *inter partes* reexamination proceeding 95/001,650, filed on November 18, 2011, is **dismissed**.

Prosecution of *inter partes* reexamination proceeding 95/001,650 **will not be terminated, and will continue**.

DECISION

The patent owner argues that termination of *inter partes* reexamination proceeding control number 95/001,650 (the '1650 proceeding) is required by 35 U.S.C. 317(b), which provides, in pertinent part (emphasis added):

> Once a **final decision** has been entered against a party in a civil action arising in whole or in part under section 1338 of title 28, that the party has not sustained its burden of proving the invalidity of any patent claim in suit . . . then . . . an inter partes reexamination requested by that party or its privies on the basis of . . . issues [which that party or its privies raised or could have raised in such civil action] may not thereafter be maintained by the Office . . .

The Office analyzes whether a reexamination proceeding must be terminated pursuant to 35 U.S.C. 317(b) by determining:

1. Whether the third party requester was a party to the litigation;
2. Whether the decision is final, i.e., after all appeals;
3. Whether the court decided that the requester/party had not sustained its burden of proving the invalidity of any claim in suit of the patent, which claim is also under reexamination; and
4. Whether the issues raised in the reexamination proceeding are the same as issues that were raised, or are issues that could have been raised, by the requester in the civil action.

The patent owner informs the Office that the patent under reexamination, U.S. Patent No. 7,955,733 (the '733 patent), was the subject of a civil action in district court, i.e., *Hydro-Quebec v. A123 Systems Inc. et. al.,* Civil Action No. 3:11-CV-1271 (N.D. Tex.) (the litigation). The patent owner submitted, with the present petition, a copy of an order signed by the district court on November 17, 2011, in which the district court stated that "[a]ll claims by Plaintiffs against Defendant A123 that have accrued as of December 31, 2011 are hereby dismissed with prejudice", and that "HQ [the patent owner] and A123 [the requester/defendant] waive their right to appeal or otherwise seek relief from the order". For these reasons, the patent owner has provided sufficient evidence that (1) the requester A123 was a party to the litigation, and (2) the district court's decision was final.

Regarding elements 3 and 4, the patent owner again points to the district court's November 17, 2011 order, which states that "A123 [the defendant/requester of the '1650 proceeding] has not sustained its burden of proving by clear and convincing evidence the invalidity of any claims of U.S. Patent No. 7,955,733 [the patent under reexamination] . . . Accordingly, all claims in United States Patent No. 7,955,733 . . . remain presumptively valid and enforceable". In patent owner's March 8, 2012 paper entitled "Second Supplemental Notification of Prior and Concurrent Proceedings and Petition" (patent owner's second supplement to the petition) and accompanying attachments, patent owner provides evidence that, at the time of the district court's order, the litigation was at an early stage, which was prior to the time when the identification of claims asserted by the patent owner, and any allegations of the invalidity of those claims by the requester, would have been required by the district court.[1] The patent owner points out that the requester/defendant A123 "remained free to challenge the validity of all claims at the time of the Order". The patent owner further argues that at the time of the order, all claims (claims 1-21) of the '733 patent were at issue, and the requester could have raised, in the civil action, any of the issues raised in the reexamination proceeding. In essence, the patent owner argues that because the court's dismissal on the merits has *res judicata* effect,[2] the present reexamination proceeding cannot be maintained pursuant to 35 U.S.C. 317(b).

---

[1] See also the paper entitled "U.S. District Court, Northern District of Texas (Dallas), Civil Docket for Case #: 3:11-cv-01217-B", which was filed as an attachment to patent owner's March 6, 2012 paper entitled "Supplemental Notification of Prior and Concurrent Proceedings and Petition" (patent owner's first supplement to the petition).

[2] See, e.g., *Do-Well Mach. Shop, Inc. v. United States*, 870 F.2d 637, 639-40 (Fed. Cir. 1989) (explaining that a dismissal on the merits, as opposed to a dismissal for lack of jurisdiction, generally bars future litigation).

The provisions of the *inter partes* reexamination statute, however, do not expressly incorporate the doctrine of claim preclusion (*res judicata*) or the doctrine of issue preclusion. 35 U.S.C. 317(b) is the sole source of preclusion of *inter partes* reexamination, and it incorporates only elements of each doctrine. Claim preclusion generally refers to "the effect of foreclosing any litigation of matters that *never have been litigated*, because of a determination that they *should have been advanced* in an earlier suit" 18 Charles Alan Wright, Arthur R. Miller & Edward H. Cooper, Federal Practice and Procedure § 4402 (2d ed. 2002).[3] Issue preclusion refers to "the effect of foreclosing relitigation of matters that have once been litigated and decided". Wright, Miller & Cooper § 4402. A principle distinction between claim preclusion and issue preclusion is that the former forecloses litigation of matters that have *never been litigated.*[4] 35 U.S.C. 317(b) prohibits a requester from requesting, and the Office from maintaining, an *inter partes* reexamination of a patent claim on the basis of issues which the requester *raised, or could have raised*, in a civil action as defined in the statute. In other words, the statute forecloses *inter partes* reexamination on the basis of issues that *have been litigated* (i.e., *raised*), which is an element of issue preclusion. The statute also forecloses *inter partes* reexamination on the basis of issues that have not been litigated, but *should have been advanced* (i.e., *could have been raised*), which is the primary element of claim preclusion. The statute, however, does not incorporate the entirety of either doctrine.

The doctrine of claim preclusion, itself, applies to civil actions, not to reexamination proceedings. A reexamination proceeding is not a civil action.[5] Reexamination proceedings are limited to a review of patents and printed publications, unlike a civil action, which is not so limited. The standards of the Office in determining the patentability of patent claims differ from those used in the courts to determine invalidity. In civil litigation, a challenger who attacks the validity of patent claims must overcome the presumption of validity with clear and convincing evidence that the patent is invalid. In examinations and reexaminations within the Office, there is no presumption of validity and the standard of proof, a preponderance of evidence, is lower than the clear and convincing standard in a civil action. In reexamination proceedings, claims are given their broadest reasonable interpretation, consistent with the specification, unlike the standard used in district courts. See also *In re Etter, 756 F.2d 852, 856 (Fed. Cir. 1985)*[6]:

> Reexamination[s are] conducted according to the procedures established for initial examination," *35 U.S.C. § 305*, and PTO examination procedures have distinctly different standards, parties, purposes, and outcomes compared to civil litigation.

---

[3] See also *Jet, Inc. v. Sewage Aeration Systems*, 223 F.3d 1360, 1362; 55 USPQ2d 1854 (Fed. Cir. 2000), quoting *Migra v. Warren City School Dist. Bd. of Educ.*, 465 U.S. 75, 77 n.1, 104 S.Ct. 892 (1984).

[4] See, e.g., *Black's Law Dictionary,* definition of "claim preclusion", quoting Charles Alan Wright, *The Law of Federal Courts,* §100A, at 723.

[5] A reexamination proceeding is a creature of statute and regulation, and rights in a reexamination proceeding must be conferred by the statute and regulations. For *inter partes* reexamination, Congress enacted the extent of preclusion via 35 U.S.C. § 317, and that is the extent to which preclusion is limited.

[6] See also See *Ethicon v. Quigg,* 849 F.2d 1422, 1428 (Fed. Cir. 1988) (citations omitted): "[C]hallenging validity in a court and requesting PTO reexamination are 'concepts not in conflict'".

Furthermore, one of the essential elements of claim preclusion (*res judicata*), is the involvement of the same parties, or parties in privity with the original parties.[7] See *In re Trans Texas Holdings Corp.*, 498 F.3d 1290, 83 USPQ2d 1835 (Fed. Cir 2007), in which the court held that issue preclusion could not be applied against the Office based on a district court holding in an infringement proceeding, because the Office was not a party to the earlier infringement proceeding. See also *Houston Atlas, Inc. v. Del Mar Scientific, Inc.*, 217 USPQ 1032, 1037 (N.D. Tex. 1982, *aff'd*, 703 F.2d 555 (5th Cir. 1983), in which the court stated that "[t]he Patent Office was not a party to the original proceedings, and . . . the consent judgment is not binding on the Patent Office or the public which it represents."

For these reasons, the doctrine of claim preclusion itself is not applicable to reexamination proceedings. 35 U.S.C. 317(b), which is applicable to reexamination proceedings, stands by itself. In fact, if the doctrine of claim preclusion were applicable to reexamination in general, then there would have been no need for Congress to expressly provide for the specific provisions of 35 U.S.C. 317(b) (or, for that matter, of 35 U.S.C. 317(c)) of the *inter partes* reexamination statute.

Where, as here, the record includes evidence that no specific claim or claims of the patent under reexamination have been asserted, and, in particular, evidence that no allegation of invalidity was made in the litigation, the court's statements that "A123 [the requester] has not sustained its burden of proving by clear and convincing evidence the invalidity of any claims of U.S. Patent No. 7,955,733 . . . Accordingly, all claims in United States Patent No. 7,955,733 . . . remain presumptively valid and enforceable", are simply an acknowledgment that because the requester *was not yet required to shoulder its burden* of proving the invalidity of any of the patent claims at the time of the court's order,[8] the burden was not sustained. There is no evidence that the court *ruled* on the issue of invalidity, particularly where, as here, the record includes evidence that no allegation of invalidity was before the court. For this reason, it is simply not clear what effect, if any, the court's order could have with respect to the issues of patentability of the specific claims under reexamination, i.e., claims 1-3, 5-7, and 9 of the '733 patent, that have been raised in the present *inter partes* reexamination proceeding.

For these reasons, elements 3 and 4 have not been shown to have been satisfied.

Accordingly, patent owner's November 18, 2011 petition under 37 CFR 1.182 to terminate the present *inter partes* reexamination proceeding is **dismissed**.

---

[7] See *Hallco v. Foster*, 256 F.3d 2190, 59 USPQ2d 1346 (Fed. Cir. 2001): "Simply put, the doctrine of res judicata provides that when a final judgment has been entered on the merits of a case, 'it is a finality as to the claim or demand in controversy, concluding *parties and those in privity with them*, not only as to every matter which as offered and received to sustain or defeat the claim or demand, but as to any other admissible matter which might have been offered for that purpose'." (citations omitted) (emphasis added). See also the definition of "res judicata", *Black's Law Dictionary*, 7th Ed., (1999), quoting *Restatement (Second) of Judgments*, §§17, 24 (1982).

[8] See page 2 of patent owner's supplement to the petition, in which the patent owner states: "As . . . Rule 3-1(a)(1) indicates, the Court does not require identification of particular asserted claims until after an initial case management conference. Furthermore, Rule 3-3, governing allegations of invalidity by A123 Systems, does not come into play until after identification of the asserted claims. As the docket sheet previously provided indicates, no case management conference had occurred at the time of the Order and therefore neither Rule 3-1 nor Rule 303 had been triggered . . ."

Prosecution of *inter partes* reexamination proceeding control no. 95/001,650 (the '1650 proceeding) **will not be terminated, and will continue**.

CONCLUSION

- Patent owner's November 18, 2011 petition under 37 CFR 1.182 to terminate *inter partes* reexamination proceeding control number 95/001,650 is **dismissed**.

- The prosecution of the '1650 *inter partes* reexamination proceeding **will not be terminated and will continue**.

- Any inquiry concerning this communication should be directed to the undersigned at (571) 272-7724.

/Cynthia L. Nessler/
Cynthia L. Nessler
Senior Legal Advisor
Office of Patent Legal Administration

UNITED STATES PATENT AND TRADEMARK OFFICE

UNITED STATES DEPARTMENT OF COMMERCE
United States Patent and Trademark Office
Address: COMMISSIONER FOR PATENTS
P.O. Box 1450
Alexandria, Virginia 22313-1450
www.uspto.gov

APPLICATION NO.	FILING DATE	FIRST NAMED INVENTOR	ATTORNEY DOCKET NO.	CONFIRMATION NO.
95/001,655	06/10/2011	7090506	67507-004-3Re-exam	8442

65358 7590 01/26/2012

WPAT, PC
INTELLECTUAL PROPERTY ATTORNEYS
7225 BEVERLY ST.
ANNANDALE, VA 22003

EXAMINER	
ART UNIT	PAPER NUMBER

DATE MAILED: 01/26/2012

Please find below and/or attached an Office communication concerning this application or proceeding.

UNITED STATES PATENT AND TRADEMARK OFFICE

Commissioner for Patents
United States Patents and Trademark Office
P.O.Box 1450
Alexandria, VA 22313-1450
www.uspto.gov

THIRD PARTY REQUESTER'S CORRESPONDENCE ADDRESS
Harry Shubin
MILLEN WHITE ZELANO & BRANIGAN, P.C.
2200 Clarendon Blvd, Suite 1400
Arlington, VA 22201

Date: MAILED

JAN 26 2012

CENTRAL REEXAMINATION UNIT

EX PARTE REEXAMINATION COMMUNICATION TRANSMITTAL FORM

REEXAMINATION CONTROL NO. : 90011465
PATENT NO. : 7090506
ART UNIT : 3992

Enclosed is a copy of the latest communication from the United States Patent and Trademark Office in the above identified ex parte reexamination proceeding (37 CFR 1.550(f)).

Where this copy is supplied after the reply by requester, 37 CFR 1.535, or the time for filing a reply has passed, no submission on behalf of the ex parte reexamination requester will be acknowledged or considered (37 CFR 1.550(g)).

UNITED STATES PATENT AND TRADEMARK OFFICE

UNITED STATES DEPARTMENT OF COMMERCE
United States Patent and Trademark Office
Address: COMMISSIONER FOR PATENTS
P.O. Box 1450
Alexandria, Virginia 22313-1450
www.uspto.gov

APPLICATION NO.	FILING DATE	FIRST NAMED INVENTOR	ATTORNEY DOCKET NO.	CONFIRMATION NO.
90/011,465	01/31/2011	7090506	67507-004-2Re-exam	7897

65358 7590 01/26/2012

WPAT, PC
INTELLECTUAL PROPERTY ATTORNEYS
7225 BEVERLY ST.
ANNANDALE, VA 22003

EXAMINER	
ART UNIT	PAPER NUMBER

DATE MAILED: 01/26/2012

Please find below and/or attached an Office communication concerning this application or proceeding.

UNITED STATES PATENT AND TRADEMARK OFFICE

Commissioner for Patents
United States Patent and Trademark Office
P.O. Box 1450
Alexandria, VA 22313-1450
www.uspto.gov

MAILED

JAN 26 2012

CENTRAL REEXAMINATION UNIT

DO NOT USE IN PALM PRINTER

(THIRD PARTY REQUESTER'S CORRESPONDENCE ADDRESS)

FINNEGAN, HENDERSON, FARABOW, GARRETT & DUNNER, LLP

901 NEW YORK AVENUE, NW

WASHINGTON, DC 20001-4413

Transmittal of Communication to Third Party Requester
Inter Partes Reexamination

REEXAMINATION CONTROL NUMBER *95/001,655*.

PATENT NUMBER *7090506*.

TECHNOLOGY CENTER *3900*.

ART UNIT *3992*.

Enclosed is a copy of the latest communication from the United States Patent and Trademark Office in the above-identified reexamination proceeding. 37 CFR 1.903.

Prior to the filing of a Notice of Appeal, each time the patent owner responds to this communication, the third party requester of the *inter partes* reexamination may once file written comments within a period of 30 days from the date of service of the patent owner's response. This 30-day time period is statutory (35 U.S.C. 314(b)(2)), and, as such, it cannot be extended. See also 37 CFR 1.947.

If an *ex parte* reexamination has been merged with the *inter partes* reexamination, no responsive submission by any *ex parte* third party requester is permitted.

All correspondence relating to this inter partes reexamination proceeding should be directed to the **Central Reexamination Unit** at the mail, FAX, or hand-carry addresses given at the end of the communication enclosed with this transmittal.

UNITED STATES PATENT AND TRADEMARK OFFICE

Commissioner for Patents
United States Patent and Trademark Office
P.O. Box 1450
Alexandria, VA 22313-1450
www.uspto.gov

MAILED

JAN 26 2012

CENTRAL REEXAMINATION UNIT

WPAT, PC
INTELLECTUAL PROPERTY ATTORNEYS
7225 BEVERLY ST.
ANNANDALE, VA 22003

(Patent Owner)

MILLEN, WHITE, ZELANO & BRANIGAN, P.C.
2200 CLARENDON BLVD.
SUITE 1400
ARLINGTON, VA 22201

(For 90/011,465 Requester)

FINNEGAN, HENDERSON, FARABOW,
GARRETT & DUNNER, LLP
901 NEW YORK AVENUE, NW
WASHINGTON, DC 20001-4413

(For 95/001,655 Requester)

In re Sung et al.
Ex Parte Reexamination Proceeding
Control No.: 90/011,465
Filed: January 31, 2011
For: U.S. Patent No. 7,090,506 B2

In re Sung et al.
Inter Partes Reexamination Proceeding
Control No.: 95/001,655
Filed: June 10, 2011
For: U.S. Patent No.: 7,090,506 B2

DECISION
SUA SPONTE
TO MERGE
REEXAMINATION
PROCEEDINGS

The above-captioned reexamination proceedings are before the Office of Patent Legal Administration for *sua sponte* consideration on merging the above proceedings.

Ex parte reexamination proceeding No. 90/011,465 and *inter partes* reexamination proceeding No. 95/001,655 **are merged** into a single proceeding.

BACKGROUND

1. On August 15, 2006, United States Patent Number 7,090,506 B2 ("the '506 patent") issued to Sung et al. with 23 claims.

2. On December 1, 2009, a first request for *ex parte* reexamination of claims 1-23 of the '506

patent was filed by a third party requester, which request was assigned Reexamination Control No. 90/009,613 ("the '613 proceeding").

3. On January 31, 2011, a second request for *ex parte* reexamination of claims 1-23 of the '506 patent was filed by a third party requester and was assigned control number 90/011,465 ("the '465 proceeding").

4. The '613 proceeding progressed to the point where, on February 25, 2011, the Office issued a Notice of Intent to Issue a Reexamination Certificate (NIRC).

5. On April 8, 2011, *ex parte* reexamination of claims 1-23 of the '506 patent was granted in the '465 *reexamination* proceeding. No patent owner statement has been filed in the '465 reexamination proceeding, and the time for filing such a statement has expired.

6. On May 24, 2011, the '613 reexamination proceeding was concluded by the issuance and publication of *Ex Parte* Reexamination Certificate (8263rd), US 7,090,506 C1. The certificate confirmed claims 1 and 4 and canceled claims 10 and 12 of United States Patent No. 6,183,366. The certificate also added new claim 24. The certificate stated that claims 5, 9, and 17 were determined to be patentable as amended, and that claims 11, 13-16, and 18-23, dependent on an amended claim, were determined to be patentable.

7. On June 10, 2011, a request for *inter partes* reexamination of claims 1-9, 11, and 13-24 of the '506 patent was filed by a third party requester and assigned Reexamination Control No. 95/001,655 ("*the* '655 proceeding"). The request identified LG Display Co., Ltd. as the real party in interest.

8. On August 9, 2011, *inter partes* reexamination of claims 1-9, 11, and 13-24 of the '506 patent was granted in the '655 proceeding.

9. To date, no Office action has issued in either of the '465 and '655 proceedings.

DECISION

I. MERGER OF PROCEEDINGS

Reexamination has been ordered in the two above-captioned proceedings for overlapping claims of the same patent. One of the proceedings (the '465 proceeding) is an *ex parte* proceeding. The other proceeding (the '655 proceeding) is an *inter partes* proceeding. Both proceedings are still pending, and have not been terminated. In addition, the period for filing the patent owner's statement in the *ex parte* proceeding has expired. Therefore, consideration of merger is now ripe.

MPEP 2686.01 points out:

> Where a second request for reexamination is filed and reexamination is ordered, and a first reexamination proceeding is pending, the proceedings will be merged where the Office (in its discretion) deems it appropriate to do so, to facilitate the orderly handling of the proceedings. However, a decision not to merge is within the sole discretion of the Office to facilitate/carry out the statutory mandate of 35 U.S.C. 314(c) to conduct reexamination proceedings with "special dispatch."

The general policy of the Office is that two reexamination proceedings will not be conducted separately, and at the same time, as to a particular patent. The rationale for this policy is (1) to prevent inconsistent, and possibly conflicting, amendments from being introduced into the two proceedings on behalf of the patent owner, (2) to provide a comprehensive examination of the patent based on the issues raised in both of the proceedings, and (3) to expedite the prosecution of both proceedings.

In this instance, based upon the record as a whole, it is found, based on the facts as they exist at present, that merger of the proceedings should facilitate the orderly handling of the proceedings with special dispatch. Accordingly, the 90/011,465 and 95/001,655 proceedings **are hereby merged**. The merged proceeding will be conducted in accordance with the guidelines and requirements that follow.

II. THE SAME CLAIMS MUST BE MAINTAINED IN BOTH PROCEEDINGS

The claims are identical in both proceedings. The claims under reexamination in the '465 proceeding are the claims present in the *Ex Parte* Reexamination Certificate (8263rd), US 7,090,506 C1, a copy of which has been made of record by placing a copy of the patent, including the certificate, into the Image File Wrapper of the '465 proceeding. The patent owner is required to continue to maintain the same claims (and specification) in both files throughout the merged proceeding.

III. CONDUCT OF MERGED PROCEEDING

A. Governing regulations for the merged proceeding:

The present decision merges an *ex parte* reexamination proceeding with an *inter partes* reexamination proceeding. Pursuant to 37 CFR 1.989(b), the merged proceeding is governed by 37 CFR 1.902 through 1.997, except that the rights of the requester of the '465 *ex parte*

reexamination are governed by 37 CFR 1.510 through 1.560.[1] The examiner will conduct reexamination in the merged proceeding for claims 1-9, 11, and 13-24 of the '506 patent.

B. *Inter partes* Third Party Requester Participation:

1. Comment rights:

The *inter partes* requester can comment pursuant to 35 U.S.C. 314(b)(2).[2] First, an *inter partes* requester's right to comment is contingent upon the patent owner responding to, or commenting on, an Office action. Second, the *inter partes* requester's right to comment is limited to issues raised in either the Office action or the patent owner's response to the action. Finally, the *inter partes* requester's comments must be submitted within 30 days from the date of service of the patent owner's response. An *inter partes* requester does not have a right to comment on any issue raised outside the confines of the statute, e.g. issues raised in a previous Office action (but not raised in the most recent Office action or response) or the request and comments from the *ex parte* requester. The *inter partes* requester's comments must be submitted within the statutory time period of 30 days from the date of service of the patent owner's response.

2. Appeal Rights:

A discussion of the *inter partes* requester's appeal rights can be found in section G below.

C. Papers mailed/filed:

All papers mailed by the Office throughout the merged proceeding will take the form of a single action which applies to both proceedings. All papers issued by the Office, or filed by the patent owner and the *inter partes* requester, will contain the identifying data for both files and will be physically entered in each reexamination file. All papers filed by the patent owner and the *inter partes* requester must consist of a single paper, **filed in duplicate**, each bearing a signature and identifying data for both files, for entry into each file.

All papers filed by the patent owner and the *inter partes* requester should be directed:

by Mail to: Attn: Mail Stop "*Inter Partes* Reexam"
Central Reexamination Unit
Commissioner for Patents
P.O. Box 1450
Alexandria, VA 22313-1450

by FAX to: (571) 273-9900

[1] Active participation of the *ex parte* requester ends with the reply pursuant to 37 CFR 1.535 or the expiration of the time period for such reply. As such period has expired, further submissions on behalf of the *ex parte* requester will not be acknowledged or considered. *See* 37 CFR 1.550(g).

Central Reexamination Unit

by Hand to: Customer Service Window
Attn: Central Reexamination Unit
Randolph Building, Lobby Level
401 Dulany Street
Alexandria, VA 22314

by EFS: Registered users may submit papers via the electronic filing system EFS-Web, at:

https://efs.uspto.gov/efile/myportal/efs-registered

The patent owner and the '655 requester are reminded that every paper filed (including papers filed *via* facsimile transmission) in the merged proceeding subsequent to this decision must be served on all other parties, and every paper filed must reflect that such paper was served on the other parties, pursuant to 37 CFR 1.903. All papers are to be addressed to the Central Reexamination Unit as provided above.

D. Amendments:

The filing of any amendments to the drawings, specification or claims must comply with 37 CFR 1.943, which incorporates the provisions of 37 CFR 1.530, and the guidelines of MPEP § 2666.01, which in turn references the guidelines of MPEP § 2250.

37 CFR 1.121 does not apply to amendments in reexamination. Accordingly, clean copies of the amended claims are not required and are not to be submitted; rather amendments are to be presented via markings pursuant to paragraph 37 CFR 1.530(f), except that a claim should be canceled by a statement canceling the claim, without presentation of the text of the claim.

Pursuant to 37 CFR 1.530(i), all amendments must be made relative to the patent specification, including the claims, and drawings, which are in effect as of the date of filing the request for reexamination. *Amendments are not to be made relative to previous amendments.* Thus, for all amendments, all words not appearing in the patent are always underlined, and only words being deleted from the patent appear in brackets.

As set forth in MPEP § 2695 (which in turn references MPEP § 2295), for a reexamination proceeding, where the patent was previously reexamined and a reexamination certificate has issued for the patent, an amendment in the reexamination proceeding must be presented as if the changes made to the original patent text via the reexamination certificate are a part of the original patent. Namely, all italicized text in the certificate is considered as if the text was present without italics in the original patent. Further, any certificate text placed in brackets is considered as if it were never present in the patent at all. Although issuance of the reexamination certificate on May 24, 2011 occurred after the date of filing of the '465 request for reexamination, all amendments must be made relative to the patent specification, including the claims, and

drawings, which are currently in effect, and not relative to those in effect as of the date of filing the '465 request.

E. Fees:

Where a paper is filed that requires payment of a fee (*e.g.*, petition fee, excess claims fee, extension of time fee, appeal fee, brief fee, oral hearing fee), only a single fee need be paid. For example, only one fee need be paid for any patent owner's appellant brief (or that of the *inter partes* reexamination requester) which may be filed, even though the brief relates to merged multiple proceedings, and copies must be filed (as pointed out above) for each file in the merged proceeding.

F. Citation of Patents and Printed Publications:

Upon return of the present merged proceeding to the examiner, the examiner will review the files to ensure that each file contains identical citations of prior patents and printed publications, and will cite such documents as are necessary as part of the next action in order to place the files in that condition.

G. Appeal Rights and Procedures Reminders for *Inter Partes* Reexamination

The *inter partes* reexamination procedures for taking appeal, and for participating in the patent owner's appeal, are explained in MPEP §§ 2674 through 2675 and 2678 through 2683.

With respect to a patent owner's notice of appeal, the appeal must only be taken from the rejection(s) of the claims in the Right of Appeal Notice (RAN) that the patent owner proposes to contest, and must identify each claim rejected by examiner that the patent owner intends to contest.

With respect to the *inter partes* requester's notice of appeal, the appeal must only be taken from the finding(s) of patentability of claims in the RAN that the *inter partes* requester proposes to contest. As set forth in MPEP § 2674, the *inter partes* requester must identify in the notice of appeal each rejection that was previously proposed by the *inter partes* requester that the *inter partes* requester intends to contest and each rejection made and later withdrawn by the examiner that the *inter partes* requester intends to contest. It is not sufficient to merely appeal from the allowance of a claim (i.e., the examiner's finding of a claim patentable); the *inter partes* requester must identify each previously proposed rejection to be contested.

No new ground of rejection can be proposed by an *inter partes* requester appellant, unless such ground was withdrawn by the examiner during the prosecution of the proceeding, and the *inter partes* requester has not yet had an opportunity to propose it as an *inter partes* requester proposed ground of rejection. See 37 CFR 41.67(c)(1)(vi) as to the proposed rejections that an *inter partes* requester can challenge in the appellant brief.

CONCLUSION

1. *Ex parte* Reexamination Control No. 90/011,465 and *inter partes* Reexamination Control No. 95/001,655 are **merged into a single proceeding**, to be conducted in accordance with the procedure set forth above in Part III of this decision.

2. Any questions concerning this communication should be directed to Susy Tsang-Foster, Legal Advisor, at 571-272-7711.

Pinchus M. Laufer
Senior Legal Advisor
Office of Patent Legal Administration

January 26, 2012

UNITED STATES PATENT AND TRADEMARK OFFICE

UNITED STATES DEPARTMENT OF COMMERCE
United States Patent and Trademark Office
Address: COMMISSIONER FOR PATENTS
P.O. Box 1450
Alexandria, Virginia 22313-1450
www.uspto.gov

APPLICATION NO.	FILING DATE	FIRST NAMED INVENTOR	ATTORNEY DOCKET NO.	CONFIRMATION NO.
95/001,659	06/15/2011	7960058	112903-316US1	5193

67376 7590 03/16/2012

Patent Department
Baker Botts, L.L.P.
One Shell Plaza
910 Louisiana
Houston, TX 77002

EXAMINER	
ART UNIT	PAPER NUMBER

DATE MAILED: 03/16/2012

Please find below and/or attached an Office communication concerning this application or proceeding.

UNITED STATES PATENT AND TRADEMARK OFFICE

Commissioner for Patents
United States Patents and Trademark Office
P.O.Box 1450
Alexandria, VA 22313-1450
www.uspto.gov

DO NOT USE IN PALM PRINTER

MAILED

Date: MAR 16 2012

CENTRAL REEXAMINATION UNIT

THIRD PARTY REQUESTER'S CORRESPONDENCE ADDRESS
WILMERHALE/ A123
60 STATE STREET
BOSTON, MA 02109

Transmittal of Communication to Third Party Requester
Inter Partes Reexamination

REEXAMINATION CONTROL NO. : 95001659
PATENT NO. : 7960058
TECHNOLOGY CENTER : 3999
ART UNIT : 3991

Enclosed is a copy of the latest communication from the United States Patent and Trademark Office in the above identified Reexamination proceeding. 37 CFR 1.903.

Prior to the filing of a Notice of Appeal, each time the patent owner responds to this communication, the third party requester of the inter partes reexamination may once file written comments within a period of 30 days from the date of service of the patent owner's response. This 30-day time period is statutory (35 U.S.C. 314(b)(2)), and, as such, it cannot be extended. See also 37 CFR 1.947.

If an ex parte reexamination has been merged with the inter partes reexamination, no responsive submission by any ex parte third party requester is permitted.

All correspondence relating to this inter partes reexamination proceeding should be directed to the Central Reexamination Unit at the mail, FAX, or hand-carry addresses given at the end of the communication enclosed with this transmittal.

United States Patent and Trademark Office

Commissioner for Patents
United States Patent and Trademark Office
P.O. Box 1450
Alexandria, VA 22313-1450
www.uspto.gov

Patent Department
Baker Botts, L. L. P.
One Shell Plaza
910 Louisiana
Houston, TX 77002

(For Patent Owner)

MAILED

MAR 16 2012

CENTRAL REEXAMINATION UNIT

WilmerHale/A123
60 State Street
Boston, MA 02109

(For Requester)

In re Goodenough et al
Inter Partes Reexamination Proceeding
Control No. 95/001,659
Filed: June 15, 2011
For: U.S. Patent No.: 7,960,058

DECISION DISMISSING PETITION TO TERMINATE *INTER PARTES* REEXAMINATION PROCEEDING

This is a decision on patent owner's November 18, 2011, March 6, 2012, and March 8, 2012 papers, entitled, respectively, "Notification of Prior and Concurrent Proceedings and Petition", "Supplemental Notification of Prior and Concurrent Proceedings and Petition", and "Second Supplemental Notification of Prior and Concurrent Proceedings and Petition", which are taken together as a petition under 37 CFR 1.182 to terminate the present proceeding (the November 18, 2011 petition to terminate).

The November 18, 2011 petition to terminate, and the record as a whole, are before the Office of Patent Legal Administration for consideration.

SUMMARY

Patent owner's petition under 37 CFR 1.182 to terminate *inter partes* reexamination proceeding 95/001,659, filed on November 18, 2011, is **dismissed**.

Prosecution of *inter partes* reexamination proceeding 95/001,659 **will not be terminated, and will continue**.

DECISION

The patent owner argues that termination of *inter partes* reexamination proceeding control number 95/001,659 (the '1659 proceeding) is required by 35 U.S.C. 317(b), which provides, in pertinent part (emphasis added):

> Once a **final decision** has been entered against a party in a civil action arising in whole or in part under section 1338 of title 28, that the party has not sustained its burden of proving the invalidity of any patent claim in suit . . . then . . . an inter partes reexamination requested by that party or its privies on the basis of . . . issues [which that party or its privies raised or could have raised in such civil action] may not thereafter be maintained by the Office . . .

The Office analyzes whether a reexamination proceeding must be terminated pursuant to 35 U.S.C. 317(b) by determining:

1. Whether the third party requester was a party to the litigation;
2. Whether the decision is final, i.e., after all appeals;
3. Whether the court decided that the requester/party had not sustained its burden of proving the invalidity of any claim in suit of the patent, which claim is also under reexamination; and
4. Whether the issues raised in the reexamination proceeding are the same as issues that were raised, or are issues that could have been raised, by the requester in the civil action.

The patent owner informs the Office that the patent under reexamination, U.S. Patent No. 7,960,058 (the '058 patent), was the subject of a civil action in district court, i.e., *Hydro-Quebec v. A123 Systems Inc. et. al.,* Civil Action No. 3:11-CV-1271 (N.D. Tex.) (the litigation). The patent owner submitted, with the present petition, a copy of an order signed by the district court on November 17, 2011, in which the district court stated that "[a]ll claims by Plaintiffs against Defendant A123 that have accrued as of December 31, 2011 are hereby dismissed with prejudice", and that "HQ [the patent owner] and A123 [the requester/defendant] waive their right to appeal or otherwise seek relief from the order". For these reasons, the patent owner has provided sufficient evidence that (1) the requester A123 was a party to the litigation, and (2) the district court's decision was final.

Regarding elements 3 and 4, the patent owner again points to the district court's November 17, 2011 order, which states that "A123 [the defendant/requester of the '1659 proceeding] has not sustained its burden of proving by clear and convincing evidence the invalidity of any claims of . . . U.S. Patent No. 7,960,058 [the patent under reexamination]. Accordingly, all claims in . . . United States Patent No. 7,960,058 remain presumptively valid and enforceable". In patent owner's March 8, 2012 paper entitled "Second Supplemental Notification of Prior and Concurrent Proceedings and Petition" (patent owner's second supplement to the petition) and accompanying attachments, patent owner provides evidence that, at the time of the district court's order, the litigation was at an early stage, which was prior to the time when the identification of claims asserted by the patent owner, and any allegations of the invalidity of those claims by the requester, would have been required by the district court.[1] The patent owner points out that the requester/defendant A123 "remained free to challenge the validity of all claims at the time of the Order". The patent owner further argues that at the time of the order, all claims (claims 1-22) of the '058 patent were at issue, and the requester could have raised, in the civil action, any of the issues raised in the reexamination proceeding. In essence, the patent owner argues that because the court's dismissal on the merits has *res judicata* effect,[2] the present reexamination proceeding cannot be maintained pursuant to 35 U.S.C. 317(b).

---

[1] See also the paper entitled "U.S. District Court, Northern District of Texas (Dallas), Civil Docket for Case #: 3:11-cv-01217-B", which was filed as an attachment to patent owner's March 6, 2012 paper entitled "Supplemental Notification of Prior and Concurrent Proceedings and Petition" (patent owner's first supplement to the petition).

[2] See, e.g., *Do-Well Mach. Shop, Inc. v. United States*, 870 F.2d 637, 639-40 (Fed. Cir. 1989) (explaining that a dismissal on the merits, as opposed to a dismissal for lack of jurisdiction, generally bars future litigation).

The provisions of the *inter partes* reexamination statute, however, do not expressly incorporate the doctrine of claim preclusion (*res judicata*) or the doctrine of issue preclusion. 35 U.S.C. 317(b) is the sole source of preclusion of *inter partes* reexamination, and it incorporates only elements of each doctrine. Claim preclusion generally refers to "the effect of foreclosing any litigation of matters that *never have been litigated*, because of a determination that they *should have been advanced* in an earlier suit" 18 Charles Alan Wright, Arthur R. Miller & Edward H. Cooper, Federal Practice and Procedure § 4402 (2d ed. 2002).[3] Issue preclusion refers to "the effect of foreclosing relitigation of matters that have once been litigated and decided". Wright, Miller & Cooper § 4402. A principle distinction between claim preclusion and issue preclusion is that the former forecloses litigation of matters that have *never been litigated.*[4] 35 U.S.C. 317(b) prohibits a requester from requesting, and the Office from maintaining, an *inter partes* reexamination of a patent claim on the basis of issues which the requester *raised, or could have raised*, in a civil action as defined in the statute. In other words, the statute forecloses *inter partes* reexamination on the basis of issues that *have been litigated* (i.e., *raised*), which is an element of issue preclusion. The statute also forecloses *inter partes* reexamination on the basis of issues that have not been litigated, but *should have been advanced* (i.e., *could have been raised*), which is the primary element of claim preclusion. The statute, however, does not incorporate the entirety of either doctrine.

The doctrine of claim preclusion, itself, applies to civil actions, not to reexamination proceedings. A reexamination proceeding is not a civil action.[5] Reexamination proceedings are limited to a review of patents and printed publications, unlike a civil action, which is not so limited. The standards of the Office in determining the patentability of patent claims differ from those used in the courts to determine invalidity. In civil litigation, a challenger who attacks the validity of patent claims must overcome the presumption of validity with clear and convincing evidence that the patent is invalid. In examinations and reexaminations within the Office, there is no presumption of validity and the standard of proof, a preponderance of evidence, is lower than the clear and convincing standard in a civil action. In reexamination proceedings, claims are given their broadest reasonable interpretation, consistent with the specification, unlike the standard used in district courts. See also *In re Etter, 756 F.2d 852, 856 (Fed. Cir. 1985)*[6]:

> Reexamination[s are] conducted according to the procedures established for initial examination," *35 U.S.C. § 305*, and PTO examination procedures have distinctly different standards, parties, purposes, and outcomes compared to civil litigation.

---

[3] See also *Jet, Inc. v. Sewage Aeration Systems*, 223 F.3d 1360, 1362; 55 USPQ2d 1854 (Fed. Cir. 2000), quoting *Migra v. Warren City School Dist. Bd. of Educ.*, 465 U.S. 75, 77 n.1, 104 S.Ct. 892 (1984).

[4] See, e.g., *Black's Law Dictionary,* definition of "claim preclusion", quoting Charles Alan Wright, *The Law of Federal Courts,* §100A, at 723.

[5] A reexamination proceeding is a creature of statute and regulation, and rights in a reexamination proceeding must be conferred by the statute and regulations. For *inter partes* reexamination, Congress enacted the extent of preclusion via 35 U.S.C. § 317, and that is the extent to which preclusion is limited.

[6] See also See *Ethicon v. Quigg,* 849 F.2d 1422, 1428 (Fed. Cir. 1988) (citations omitted): "[C]hallenging validity in a court and requesting PTO reexamination are 'concepts not in conflict'".

Furthermore, one of the essential elements of claim preclusion (*res judicata*), is the involvement of the same parties, or parties in privity with the original parties.[7] See *In re Trans Texas Holdings Corp.*, 498 F.3d 1290, 83 USPQ2d 1835 (Fed. Cir 2007), in which the court held that issue preclusion could not be applied against the Office based on a district court holding in an infringement proceeding, because the Office was not a party to the earlier infringement proceeding. See also *Houston Atlas, Inc. v. Del Mar Scientific, Inc.*, 217 USPQ 1032, 1037 (N.D. Tex. 1982, *aff'd*, 703 F.2d 555 (5th Cir. 1983), in which the court stated that "[t]he Patent Office was not a party to the original proceedings, and . . . the consent judgment is not binding on the Patent Office or the public which it represents."

For these reasons, the doctrine of claim preclusion itself is not applicable to reexamination proceedings. 35 U.S.C. 317(b), which is applicable to reexamination proceedings, stands by itself. In fact, if the doctrine of claim preclusion were applicable to reexamination in general, then there would have been no need for Congress to expressly provide for the specific provisions of 35 U.S.C. 317(b) (or, for that matter, of 35 U.S.C. 317(c)) of the *inter partes* reexamination statute.

Where, as here, the record includes evidence that no specific claim or claims of the patent under reexamination have been asserted, and, in particular, evidence that no allegation of invalidity was made in the litigation, the court's statements that "A123 [the requester] has not sustained its burden of proving by clear and convincing evidence the invalidity of any claims . . . of U.S. Patent No. 7,960,058. Accordingly, all claims in . . . United States Patent No. 7,960,058 remain presumptively valid and enforceable", are simply an acknowledgment that because the requester *was not yet required to shoulder its burden* of proving the invalidity of any of the patent claims at the time of the court's order,[8] the burden was not sustained. There is no evidence that the court *ruled* on the issue of invalidity, particularly where, as here, the record includes evidence that no allegation of invalidity was before the court. For this reason, it is simply not clear what effect, if any, the court's order could have with respect to the issues of patentability of the specific claims under reexamination, i.e., claims 1-22 of the '058 patent, that have been raised in the present *inter partes* reexamination proceeding.

For these reasons, elements 3 and 4 have not been shown to have been satisfied.

Accordingly, patent owner's November 18, 2011 petition under 37 CFR 1.182 to terminate the present *inter partes* reexamination proceeding is **dismissed**.

---

[7] See *Hallco v. Foster*, 256 F.3d 2190, 59 USPQ2d 1346 (Fed. Cir. 2001): "Simply put, the doctrine of res judicata provides that when a final judgment has been entered on the merits of a case, 'it is a finality as to the claim or demand in controversy, concluding *parties and those in privity with them*, not only as to every matter which as offered and received to sustain or defeat the claim or demand, but as to any other admissible matter which might have been offered for that purpose'." (citations omitted) (emphasis added). See also the definition of "res judicata", *Black's Law Dictionary*, 7th Ed., (1999), quoting *Restatement (Second) of Judgments*, §§17, 24 (1982).

[8] See page 2 of patent owner's supplement to the petition, in which the patent owner states: "As . . . Rule 3-1(a)(1) indicates, the Court does not require identification of particular asserted claims until after an initial case management conference. Furthermore, Rule 3-3, governing allegations of invalidity by A123 Systems, does not come into play until after identification of the asserted claims. As the docket sheet previously provided indicates, no case management conference had occurred at the time of the Order and therefore neither Rule 3-1 nor Rule 303 had been triggered . . ."

Prosecution of *inter partes* reexamination proceeding control no. 95/001,659 (the '1659 proceeding) **will not be terminated, and will continue**.

CONCLUSION

- Patent owner's November 18, 2011 petition under 37 CFR 1.182 to terminate *inter partes* reexamination proceeding control number 95/001,659 is **dismissed**.

- The prosecution of the '1659 *inter partes* reexamination proceeding **will not be terminated and will continue**.

- Any inquiry concerning this communication should be directed to the undersigned at (571) 272-7724.

/Cynthia L. Nessler/
Cynthia L. Nessler
Senior Legal Advisor
Office of Patent Legal Administration

UNITED STATES PATENT AND TRADEMARK OFFICE

Commissioner for Patents
United States Patent and Trademark Office
P.O. Box 1450
Alexandria, VA 22313-1450
www.uspto.gov

DESIGN IP, P.C.
5100 W. TILGHMAN STREET
SUITE 205
ALLENTOWN PA 18104

(For Patent Owner)

DAVID R. YOHANNAN
KELLEY DRYE & WARREN LLP
3050 K STREET NW, SUITE 400
WASHINGTON, DC 20007

(For the '1660 Requester)

MAILED

JAN 2 0 2012

CENTRAL REEXAMINATION UNIT

In re Odd N. Oddsen, Jr.
Ex Parte Reexamination Proceeding
Control No.: 90/011,535
Filed: March 4, 2011
For: U.S. Patent No. 7,100,880

In re Odd N. Oddsen, Jr.
Inter Partes Reexamination Proceeding
Control No.: 95/001,660
Filed: June 15, 2011
For: U.S. Patent No.: 7,100,880

DECISION
SUA SPONTE
TO MERGE
REEXAMINATION
PROCEEDINGS

The above-captioned reexamination proceedings are before the Office of Patent Legal Administration for *sua sponte* consideration on merging the above proceedings.

Ex parte reexamination proceeding No. 90/011,535 and *inter partes* reexamination proceeding No. 95/001,660 **are merged** into a single proceeding.

BACKGROUND

1. On September 5, 2006, United States Patent Number 7,100,880 ("the '880 patent") issued to Odd N. Oddsen, Jr. with 16 claims.

2. On March 4, 2011, patent owner filed a request for *ex parte* reexamination of claims 9 and 11 of the '880 patent and assigned control number 90/011,535 ("the '11535 proceeding").

3. On March 24, 2011, *ex parte* reexamination of claims 9 and 11 of the '880 patent was granted in the '11535 reexamination proceeding.

4. On May 24, 2011, a patent owner's statement was filed that included an amendment adding new *claims* 17-21.

5. On June 15, 2011, a request for *inter partes* reexamination of claims 9 and 11 of the '880 patent was filed by a third party requester and assigned Reexamination Control No. 95/001,660 ("the '1660 proceeding"). The request identified Humanscale Corp. ("the 1660 requester") as the real party in interest.

6. On August 3, 2011, *inter partes* reexamination of claims 9 and 11 of the '880 patent was granted in the '1660 proceeding.

7. To date, no Office action has issued in either of the two proceedings.

DECISION

I. MERGER OF PROCEEDINGS

Reexamination has been ordered in the above-captioned two proceedings for overlapping claims of the same patent. One of the proceedings (the '11535 proceeding) is an *ex parte* proceeding. The other proceeding (the '1660 proceeding) is an *inter partes* proceeding. Both proceedings are still pending, and have not been terminated. In addition, the patent owner has filed a statement under 37 CFR 1.530 in the *ex parte* proceeding. Therefore, consideration of merger is ripe at this point in time.

MPEP 2686.01 points out:

> Where a second request for reexamination is filed and reexamination is ordered, and a first reexamination proceeding is pending, the proceedings will be merged where the Office (in its discretion) deems it appropriate to do so, to facilitate the orderly handling of the proceedings. However, a decision not to merge is within the sole discretion of the Office to facilitate/carry out the statutory mandate of 35 U.S.C. 314(c) to conduct reexamination proceedings with "special dispatch."

In this instance, based upon the record as a whole, it is found, based on the facts as they exist at present, that merger of the proceedings should facilitate the orderly handling of the proceedings with special dispatch. Accordingly, the 90/011,535 and 95/001,660 proceedings **are hereby merged**. The merged proceeding will be conducted in accordance with the guidelines and requirements that follow.

II. THE SAME CLAIMS MUST BE MAINTAINED IN BOTH PROCEEDINGS

Patent owner is required to maintain the same claims (and specification) in both files throughout the merged proceeding. An amendment accompanied the patent owner's statement in the '11535 *ex parte* reexamination proceeding. New claims 17-21 have been added in the '11535 *ex parte* proceeding, while the claims in the '1660 *inter partes* proceeding have not been so amended. Thus, the claims are not currently the same in both proceeding files. An Office action requiring an amendment placing the claims of both proceedings in identical form is being issued concurrently with this decision. Patent owner must respond to the Office action in accordance

with the procedure provided in 37 CFR 1.111. The *inter partes* third party requesters will then have an opportunity to comment on patent owner's response in accordance with the procedures in 37 CFR 1.947.

The patent owner is required to maintain the same claims (and specification) in both files throughout the merged proceeding.

III. CONDUCT OF MERGED PROCEEDING

A. Governing regulations for the merged proceeding:

The present decision merges an *ex parte* reexamination proceeding with an *inter partes* reexamination proceeding. Pursuant to 37 CFR 1.989(b), the merged proceeding is governed by 37 CFR 1.902 through 1.997.

B. *Inter partes* Third Party Requester Participation:

1. Comment rights:

The *inter partes* requester can comment pursuant to 35 U.S.C. 314(b)(2).[1] First, an *inter partes* requester's right to comment is contingent upon the patent owner responding to, or commenting on, an Office action. Second, the *inter partes* requester's right to comment is limited to issues raised in either the Office action or the patent owner's response to the action.

2. Appeal Rights:

The *inter partes* reexamination procedures for taking appeal, and for participating in the patent owner's appeal, are explained in MPEP 2674 through 2675 and 2678 through 2683. As pointed out in MPEP 2674:

> A notice of appeal by a third party requester must identify each rejection *that was previously proposed by that* third *party requester* which the third party requester intends to contest. It is not sufficient to merely appeal from the allowance of a claim (i.e., the examiner's finding of a claim patentable); the third party requester must identify each previously proposed rejection to be contested.

Thus, the *inter partes* reexamination requester's appeal must **only** be taken from the finding(s) of patentability of claims in the RAN as to the rejections the third party requester proposed in the *inter partes* reexamination request (not as to the rejections proposed in the *ex parte* reexamination request), and any that the *inter partes* third party requester properly added during the examination stage of the merged proceeding. Also, as provided by 37 CFR 41.67(c)(1)(vi):

---

[1] Each time that the patent owner files a response to an action on the merits from the Patent and Trademark Office, the *inter partes* third-party requester shall have one opportunity to file written comments addressing issues raised by the action of the Office or the patent owner's response thereto, if those written comments are received by the Office within 30 days after the date of service of the patent owner's response.

> No new ground of rejection can be proposed by a third party requester appellant, unless such ground was withdrawn by the examiner during the prosecution of the proceeding, and the third party requester has not yet had an opportunity to propose it as a third party requester proposed ground of rejection.

Thus, an appellant's brief shall present a concise statement of each issue. And, no new ground of rejection (i.e., a ground that the requester did not propose in the *inter partes* reexamination request, or during the merged proceeding) can be proposed by the *inter partes* third party requester appellant, unless that ground was withdrawn by the examiner during the prosecution of the proceeding, and the *inter partes* third party requester did not yet have an opportunity to propose it as a third party requester proposed ground of rejection.

C. Papers mailed/filed:

All papers mailed by the Office throughout the merged proceeding will take the form of a single action which applies to both proceedings. All papers issued by the Office, or filed by the patent owner and the third party requester, will contain the identifying data for both files and will be physically entered in each reexamination file. All papers filed by the patent owner and the third party requester must consist of a single paper, **filed in duplicate**, each bearing a signature and identifying data for both files, for entry into each file.

All papers filed by the patent owner and the third party requesters should be directed:

by Mail to:	Attn: Mail Stop "*Inter Partes* Reexam" Central Reexamination Unit Commissioner for Patents P.O. Box 1450 Alexandria, VA 22313-1450
by FAX to:	(571) 273-9900 Central Reexamination Unit
by Hand to:	Customer Service Window Attn: Central Reexamination Unit Randolph Building, Lobby Level 401 Dulany Street Alexandria, VA 22314
by EFS:	Registered users may submit papers via the electronic filing system EFS-Web, at: https://sportal.uspto.gov/authenticate/authenticateuserlocalepf.html

Patent owner and requester are reminded that every paper filed (including papers filed *via* facsimile transmission) in the merged proceeding subsequent to this decision must be served on the other party, and every paper filed must reflect that such paper was served on the other party, pursuant to 37 CFR 1.903. All papers are to be addressed to the Central Reexamination Unit as provided above.

D. Amendments:

The filing of any amendments to the drawings, specification or claims must comply with 37 CFR 1.943, which incorporates the provisions of 37 CFR 1.530, and the guidelines of MPEP § 2666.01, which in turn references the guidelines of MPEP § 2250.

37 CFR 1.121 does not apply to amendments in reexamination. Accordingly, clean copies of the amended claims are not required and are not to be submitted; rather amendments are to be presented via markings pursuant to paragraph 37 CFR 1.530(f), except that a claim should be canceled by a statement canceling the claim, without presentation of the text of the claim.

Pursuant to 37 CFR 1.530(i), all amendments must be made relative to the patent specification, including the claims, and drawings, which are in effect as of the date of filing the request for reexamination. *Amendments are not to be made relative to previous amendments.* Thus, for all amendments, all words not appearing in the patent are always underlined, and only words being deleted from the patent appear in brackets.

E. Fees:

Where a paper is filed that requires payment of a fee (*e.g.*, petition fee, excess claims fee, extension of time fee, appeal fee, brief fee, oral hearing fee), only a single fee need be paid. For example, only one fee need be paid for any patent owner's appellant brief (or that of the *inter partes* reexamination requester) which may be filed, even though the brief relates to merged multiple proceedings, and copies must be filed (as pointed out above) for each file in the merged proceeding.

F. Citation of Patents and Printed Publications:

Upon return of the present merged proceeding to the examiner, the examiner will review the files to ensure that each file contains identical citations of prior patents and printed publications, and will cite such documents as are necessary as part of the next action in order to place the files in that condition.

CONCLUSION

1. *Ex parte* Reexamination Control No. 90/011,535 and *inter partes* Reexamination Control No. 95/001,660 are **merged into a single proceeding**, to be conducted in accordance with the procedure set forth above in Part III of this decision.

2. The examiner should not issue any further Office action for the present merged proceeding until after the earlier of: (a) the submission of the required response to the concurrently mailed Office action (see II above) to place the same amendment in all proceedings and requesters' comments on that response, or (b) the expiration of the time for filing the required response and any comments requesters elect to file.

3. Any questions concerning this communication should be directed to Joseph F. Weiss, Jr., Legal Advisor, at 571-272-7759.

Pinchus M. Laufer
Senior Legal Advisor
Office of Patent Legal Administration

UNITED STATES PATENT AND TRADEMARK OFFICE

UNITED STATES DEPARTMENT OF COMMERCE
United States Patent and Trademark Office
Address: COMMISSIONER FOR PATENTS
P.O. Box 1450
Alexandria, Virginia 22313-1450
www.uspto.gov

APPLICATION NO.	FILING DATE	FIRST NAMED INVENTOR	ATTORNEY DOCKET NO.	CONFIRMATION NO.
95/001,662	06/16/2011	7,189,985	316732800100	7194

22852 7590 12/12/2011

FINNEGAN, HENDERSON, FARABOW, GARRETT & DUNNER LLP
901 NEW YORK AVENUE, NW
WASHINGTON, DC 20001-4413

EXAMINER	
ART UNIT	PAPER NUMBER

DATE MAILED: 12/12/2011

Please find below and/or attached an Office communication concerning this application or proceeding.

UNITED STATES PATENT AND TRADEMARK OFFICE

Commissioner for Patents
United States Patents and Trademark Office
P.O.Box 1450
Alexandria, VA 22313-1450
www.uspto.gov

DO NOT USE IN PALM PRINTER

THIRD PARTY REQUESTER'S CORRESPONDENCE ADDRESS

MORRISON & FOESTER, LLP
555 WEST FIFTH STREET
SUITE 3500
LOS ANGELES, CA 90013-1024

Date: 12-12-11

Transmittal of Communication to Third Party Requester
Inter Partes Reexamination

REEXAMINATION CONTROL NO. : 95001662
PATENT NO. : 7189985
TECHNOLOGY CENTER : 3999
ART UNIT : 3992

Enclosed is a copy of the latest communication from the United States Patent and Trademark Office in the above identified Reexamination proceeding. 37 CFR 1.903.

Prior to the filing of a Notice of Appeal, each time the patent owner responds to this communication, the third party requester of the inter partes reexamination may once file written comments within a period of 30 days from the date of service of the patent owner's response. This 30-day time period is statutory (35 U.S.C. 314(b)(2)), and, as such, it cannot be extended. See also 37 CFR 1.947.

If an ex parte reexamination has been merged with the inter partes reexamination, no responsive submission by any ex parte third party requester is permitted.

All correspondence relating to this inter partes reexamination proceeding should be directed to the Central Reexamination Unit at the mail, FAX, or hand-carry addresses given at the end of the communication enclosed with this transmittal.

UNITED STATES PATENT AND TRADEMARK OFFICE

Commissioner for Patents
United States Patent and Trademark Office
P.O. Box 1450
Alexandria, VA 22313-1450
www.uspto.gov

MAILED

DEC 12 2011

CENTRAL REEXAMINATION UNIT

John Mulcahy (For Patent Owner)
FINNEGAN,HENDERSON,FARABOW :
GARRETT & DUNNER, LLP :
901 New York Ave. N.W. :
Washington, DC. 20001 :

Mehran Arjomand :
MORRISON & FOERSTER : (For Third Party
555 West Fifth Street, Suite 3500 : Requester)
Los Angeles, CA. 90013 :

:

In re: Xie et al. :
Inter Partes Reexamination Proceeding : DECISION ON PETITION
Control No.: 95/001,662 :
For: U.S. Patent No.: 7,189,985 :

This is a decision on a petition filed by the Patent Owner: a petition filed on November 8, 2011, entitled "PETITION TO EXPUNGE PROPRIETY DOCUMENTS PURSUANT TO 37 C.F.R. § 1.59(b) AND M.P.E.P. § 724.05".

The petition is before the Director of the Central Reexamination Unit. The decision on the petition will be **held in abeyance** until the issuance of the Notice of Intent to Issue *Ex Parte* Reexamination Certificate (NIRC) is mailed.

REVIEW OF RELEVANT FACTS

- U.S. Patent No. 7,189,985 issued on March 13, 2007.
- A request for *inter partes* reexamination was June 16, 2011 and assigned control no. 95/001,662.
- *Inter partes* reexamination was ordered on August 3, 2011.

- A Non-Final Office Action was mailed on August 8, 2011.
- Patent Owner filed a Petition for an Extension of time dated October 27, 2011 which was granted-in-part on October 31, 2011.
- Patent Owner's Response to the Non-Final Office Action was received by the Office and serviced to the Third Party Requestor on November 8, 2011.
- The Patent Owner filed a Petition under 37 C.F.R. § 1.59(b) AND M.P.E.P. § 724.05 "petition" on November 8, 2011.

STATUTES, REGULATIONS, AND PATENT EXAMINING PROCEDURES

37 C.F.R. § 1.59 Expungement of information or copy of papers in application file.

(b) An applicant may request that the Office expunge information, other than what is excluded by paragraph (a)(2) of this section, by filing a petition under this paragraph. Any petition to expunge information from an application must include the fee set forth in § 1.17(g) and establish to the satisfaction of the Director that the expungement of the information is appropriate in which case a notice granting the petition for expungement will be provided.

MPEP § 724.05 Petition To Expunge Information or Copy of Papers in Application File

A petition under 37 CFR 1.59(b) to expunge information submitted under MPEP § 724.02, or that should have been submitted under MPEP § 724.02 (as where proprietary information is submitted in an information disclosure statement but inadvertently not submitted in a sealed envelope as discussed in MPEP § 724.02) will be entertained only if the petition fee (37 CFR 1.17(g)) is filed and the information has been found not to be **>material to< patentability. If the information is found to be **>material to< patentability, any petition to expunge the information will be denied. Any such petition to expunge information submitted under MPEP § 724.02 should be submitted at the time of filing the information under MPEP § 724.02 and directed to the Technology Center (TC) to which the application is assigned.

DECISION

The Patent Owner ("Petitioner") requests that material (Supplemental Information Disclosure Statement) that is subject to a protective order, submitted in a sealed envelop on November 8, 2011, be expunged from the file of the above referenced reexamination proceeding if found not to be material to patentability. The request purports to have been filed in compliance with the requirements of MPEP § 724.02.

As outlined in section 724.05 of the MPEP, material submitted under MPEP § 724.04 will be expunged, **if it is found not to be material to patentability** and the petition seeking to have the material expunged contains: (A) a clear identification of the information to be expunged without disclosure of the details thereof; (B) a clear statement that the information to be expunged is trade secret material, proprietary material and/or subject to a protective order, and that the information has not been otherwise made public; (C) a commitment on the part of the petitioner to retain such information for the period of any patent with regard to which such information has been submitted; (D) a statement that the petition to expunge is being submitted by, or on behalf of, the party in interest who originally submitted the information; and (E) the fee as set forth in 37 CFR 1.17(g) for a petition under 37 CFR 1.59(b). All the above-identified items have been provided.

Per the guidelines set forth in section 724.04(c), a final decision on whether the information in question is "material to patentability" in the instant reexamination proceeding will be made prior to the mailing of a Notice of Intent to Issue *Ex Parte* Reexamination Certificate (NIRC). The submitted information will be maintained separate from the reexamination file and will not be publicly available until a final determination is made as to whether or not the information is material to patentability.

Therefore, based on the above determination the decision on the petition will be **held in abeyance** until the issuance of the Notice of Intent to Issue *Ex Parte* Reexamination Certificate (NIRC) is mailed.

CONCLUSION

1. The petition filed November 8, 2011, is **held in abeyance**.

3. Telephone inquiries related to this decision should be directed to Sudhanshu C. Pathak, Supervisory Patent Reexamination Examiner, at (571) 272-5509 or in his absence to the undersigned at (571) 272-0700.

Irem Yucel
Director, Central Reexamination Unit

UNITED STATES PATENT AND TRADEMARK OFFICE

UNITED STATES DEPARTMENT OF COMMERCE
United States Patent and Trademark Office
Address: COMMISSIONER FOR PATENTS
P.O. Box 1450
Alexandria, Virginia 22313-1450
www.uspto.gov

APPLICATION NO.	FILING DATE	FIRST NAMED INVENTOR	ATTORNEY DOCKET NO.	CONFIRMATION NO.
95/001,664	06/17/2011	6,885,106 B1	2422.015REX1	8714

101608 7590 11/16/2011

Sterne, Kessler, Goldstein & Fox P.L..L.C.
1100 New York Avenue, NW
Washington, DC 20005

EXAMINER	
ART UNIT	PAPER NUMBER

DATE MAILED: 11/16/2011

Please find below and/or attached an Office communication concerning this application or proceeding.

UNITED STATES PATENT AND TRADEMARK OFFICE

Commissioner for Patents
United States Patents and Trademark Office
P.O.Box 1450
Alexandria, VA 22313-1450
www.uspto.gov

DO NOT USE IN PALM PRINTER

THIRD PARTY REQUESTER'S CORRESPONDENCE ADDRESS

FOLEY AND LARDNER LLP
3000 K STREET NW
SUITE 500
WASHINGTON, DC 20007

Date:

MAILED

NOV 16 2011

CENTRAL REEXAMINATION UNIT

Transmittal of Communication to Third Party Requester
Inter Partes Reexamination

REEXAMINATION CONTROL NO. : 95001664
PATENT NO. : 6885106
TECHNOLOGY CENTER : 3999
ART UNIT : 3992

Enclosed is a copy of the latest communication from the United States Patent and Trademark Office in the above identified Reexamination proceeding. 37 CFR 1.903.

Prior to the filing of a Notice of Appeal, each time the patent owner responds to this communication, the third party requester of the inter partes reexamination may once file written comments within a period of 30 days from the date of service of the patent owner's response. This 30-day time period is statutory (35 U.S.C. 314(b)(2)), and, as such, it cannot be extended. See also 37 CFR 1.947.

If an ex parte reexamination has been merged with the inter partes reexamination, no responsive submission by any ex parte third party requester is permitted.

All correspondence relating to this inter partes reexamination proceeding should be directed to the Central Reexamination Unit at the mail, FAX, or hand-carry addresses given at the end of the communication enclosed with this transmittal.

Decision on Petition for Extension of Time in Reexamination	Control No.: 95/001,664

1. THIS IS A DECISION ON THE PETITION FILED 28 October & 11 November 2011 .

2. THIS DECISION IS ISSUED PURSUANT TO:
   A. ☐ 37 CFR 1.550(c) – The time for taking any action by a patent owner in an *ex parte* reexamination proceeding will be extended only for sufficient cause and for a reasonable time specified.
   B. ☒ 37 CFR 1.956 – The time for taking any action by a patent owner in an *inter partes* reexamination proceeding will be extended only for sufficient cause and for a reasonable time specified.
   The petition is before the Central Reexamination Unit for consideration.

3. FORMAL MATTERS
   Patent owner requests that the period for responding to the Office action dated 20 September 2011 which sets a two(2)month period for filing a response to the Office action, be extended by two (2) months.

   A. ☒ Petition fee per 37 CFR §1.17(g)):
      i. ☐ Petition includes authorization to debit a deposit account.
      ii. ☐ Petition includes authorization to charge a credit card account.
      iii. ☐ Other: _____.
   B. ☒ Proper certificate of service was provided. (Not required in reexamination where patent owner is requester.)
   C. ☒ Petition was timely filed.
   D. ☒ Petition properly signed.

4. DECISION (See MPEP 2265 and 2665)
   A. ☐ Granted or ☒ Granted-in-part for one (1) month , because petitioner provided a factual accounting that established sufficient cause. (See 37 CFR 1.550(c) and 37 CFR 1.956).
   B. ☐ Other/comment: see attached
   C. ☐ Dismissed because:
      i. ☐ Formal matters (See unchecked box(es) (A, B, C and/or D) in section 4 above).
      ii. ☐ Petitioner failed to provide a factual accounting of reasonably diligent behavior by all those responsible for preparing a response to the outstanding Office action within the statutory time period.
      iii. ☐ Petitioner failed to explain why, in spite of the action taken thus far, the requested additional time is needed.
      iv. ☐ The statements provided fail to establish sufficient cause to warrant extension of the time for taking action (See attached).
      v. ☐ The petition is moot, _____.
      vi. ☐ Other/comment: see attached.

5. CONCLUSION

   Telephone inquiries with regard to this decision should be directed to Mark Reinhart at 571-272-1611. In his absence, calls may be directed to Sudhanshu C Pathak at 571-272-5509 in the Central Reexamination Unit.

/Mark Reinhart/ [*Signature*]	SPRS, AU 3992 Central Reexamination Unit (Title)

In consideration of providing the patent owner with a fair opportunity to present an argument against any attack on the patent as balanced with the statutory mandate of conducting reexamination proceedings with special dispatch that the Office must fully consider the facts presented in any petitions for extension of time.

Pursuant to MPEP § 2665 (in part) Extension of Time

First requests for extensions of these time periods will be granted for sufficient cause, and for a reasonable time specified-usually 1 month. The reasons stated in the request will be evaluated, and the request will be favorably considered where there is a factual accounting of reasonably diligent behavior by all those responsible for preparing a response or comments within the statutory time period. Second or subsequent requests for extensions of time, or requests for more than one month, will be granted only in extraordinary situations. (emphasis added)

On balance, there is "sufficient cause" for granting of one (1) month extension of time. Requests for more than one month will only be granted in extraordinary situations.

The petition for extension of time is hereby granted-in-part .

UNITED STATES PATENT AND TRADEMARK OFFICE

UNITED STATES DEPARTMENT OF COMMERCE
United States Patent and Trademark Office
Address: COMMISSIONER FOR PATENTS
P.O. Box 1450
Alexandria, Virginia 22313-1450
www.uspto.gov

APPLICATION NO.	FILING DATE	FIRST NAMED INVENTOR	ATTORNEY DOCKET NO.	CONFIRMATION NO.
95/001,664	06/17/2011	6,885,106 B1	2422.015REX1	8714

101608 7590 02/17/2012

Sterne, Kessler, Goldstein & Fox P.L..L.C.
1100 New York Avenue, NW
Washington, DC 20005

EXAMINER	
ART UNIT	PAPER NUMBER

DATE MAILED: 02/17/2012

Please find below and/or attached an Office communication concerning this application or proceeding.

UNITED STATES PATENT AND TRADEMARK OFFICE

Commissioner for Patents
United States Patents and Trademark Office
P.O.Box 1450
Alexandria, VA 22313-1450
www.uspto.gov

DO NOT USE IN PALM PRINTER

THIRD PARTY REQUESTER'S CORRESPONDENCE ADDRESS
FOLEY AND LARDNER LLP
3000 K STREET NW
SUITE 500
WASHINGTON, DC 20007

Date:
MAILED
FEB 17 2012
CENTRAL REEXAMINATION UNIT

Transmittal of Communication to Third Party Requester
Inter Partes Reexamination

REEXAMINATION CONTROL NO. : 95001664
PATENT NO. : 6885106
TECHNOLOGY CENTER : 3999
ART UNIT : 3992

Enclosed is a copy of the latest communication from the United States Patent and Trademark Office in the above identified Reexamination proceeding. 37 CFR 1.903.

Prior to the filing of a Notice of Appeal, each time the patent owner responds to this communication, the third party requester of the inter partes reexamination may once file written comments within a period of 30 days from the date of service of the patent owner's response. This 30-day time period is statutory (35 U.S.C. 314(b)(2)), and, as such, it cannot be extended. See also 37 CFR 1.947.

If an ex parte reexamination has been merged with the inter partes reexamination, no responsive submission by any ex parte third party requester is permitted.

All correspondence relating to this inter partes reexamination proceeding should be directed to the Central Reexamination Unit at the mail, FAX, or hand-carry addresses given at the end of the communication enclosed with this transmittal.

UNITED STATES PATENT AND TRADEMARK OFFICE

Commissioner for Patents
United States Patent and Trademark Office
P.O. Box 1450
Alexandria, VA 22313-1450
www.uspto.gov

MAILED

FEB 17 2012

CENTRAL REEXAMINATION UNIT

Robert Greene Sterne : (For Patent Owner)
STERNE, KESSLER, GOLDSTEIN :
& FOX P.L.L.C. :
1100 NEW YORK AVE., NW :
WASHINGTON, DC 20005 :

FOLEY AND LARDNER LLP : (For Third Party
3000 K STREET NW : Requester)
SUITE 500 :
WASHINGTON, DC 20007 :

In re: Damberg *et al.* :
Inter Partes Reexamination Proceeding : DECISION ON PETITION
Control No.: 95/001,664 : UNDER 37 CFR § 1.181
Deposited: June 17, 2011 :
For: U.S. Patent No.: 6,885,106 :

This is a decision on a petition filed by the patent owner on November 11, 2011, entitled: "Petition under 37 C.F.R. § 1.181 to Withdraw the Pending Office Action and *Ultra Vires* Requirement for Information" [hereinafter "the petition"].

The petition is a request to the Director to exercise his discretion pursuant to 37 CFR § 1.181 to review the examiner's requirement for information.

The petition is before the Assistant Deputy Commissioner for Patent Operations, who is acting in a capacity to oversee the Central Reexamination Unit. The petition is dismissed.

REVIEW OF RELEVANT FACTS

- U.S. Patent No. 6,885,106 issued on April 26, 2005.
- A request for *inter partes* reexamination was filed on June 17, 2011 and assigned control no. 95/001,664.
- *Inter partes* reexamination was ordered on September 8, 2011.
- The examiner issued a rejection on September 20, 2011. Included in the action was a Request for Information under 37 CFR § 1.105.
- On November 11, 2011, the patent owner filed the instant petition.
- On December 20, 2011, patent owner responded to the Office action. The response included a partial response to the requirement for information.
- Various other petitions have been filed. This is a decision only on the above noted petition.

DECISION

Patent owner ["petitioner"] argues the examiner's requirement for information under 37 CFR § 1.105 was *ultra vires* and requests that the requirement and the previous Office action be withdrawn.

The examiner, in the prior Office action, required three particular kinds of information: (1) a particular exhibit from litigation involving patent owner; (2) names of particular items known to patent owner that a allow a claimed characteristic; and (3) names of particular items known to patent owner that would not allow a claimed characteristic.

Petitioner claims that the requirement was improper for various reasons. Petitioner's complaint only goes toward items (2) and (3) required by the examiner. The petition is not drawn towards item (1), and patent owner has stated in its response to the Office action that it provided the requested exhibit of item (1). The response to the Office action did not provide materials requested as to items (2) and (3), citing the petition and the arguments from the petition as satisfying the requirements.

The examiner has indicated via informal discussion[1] with his supervisor that the patent owner's reply as to items (2) and (3) is satisfactory, and he will not hold the reply as incomplete or nonresponsive due to an incomplete reply as to those items. *See* MPEP §§ 704.12(b)-(c). Accordingly, patent owner did not actually have to supply information as to (2) and (3). The entire point of the petition was petitioner's complaint that it would be impossible and/or unreasonable to reply to those requirements, and failing to do so would risk its response being held incomplete or nonresponsive. Petitioner did not in fact provide the required information, but nonetheless its response is not deemed nonresponsive or incomplete for that reason. Accordingly, the petition and the request to remove the examiner's requirement as to items (2) and (3) is moot.

The petition is dismissed as moot.

CONCLUSION

1. The petition filed November 11, 2011 is dismissed as moot.

2. Telephone inquiries related to this decision should be directed to Mark Reinhart, Supervisory Patent Examiner, at (571) 272-1611 or in his absence to the undersigned at (571) 272-0700.

Robert J. Oberleitner,
Assistant Deputy Commissioner for Patent Operations and
Acting Director, Central Reexamination Unit

[1] Informal discussions may inform the deciding official but are neither made of record nor sent to the parties. MPEP § 1002.01.

UNITED STATES PATENT AND TRADEMARK OFFICE

UNITED STATES DEPARTMENT OF COMMERCE
United States Patent and Trademark Office
Address: COMMISSIONER FOR PATENTS
P.O. Box 1450
Alexandria, Virginia 22313-1450
www.uspto.gov

APPLICATION NO.	FILING DATE	FIRST NAMED INVENTOR	ATTORNEY DOCKET NO.	CONFIRMATION NO.
95/001,664	06/17/2011	6,885,106 B1	2422.015REX1	8714

101608 7590 02/17/2012

Sterne, Kessler, Goldstein & Fox P.L..L.C.
1100 New York Avenue, NW
Washington, DC 20005

EXAMINER	
ART UNIT	PAPER NUMBER

DATE MAILED: 02/17/2012

Please find below and/or attached an Office communication concerning this application or proceeding.

UNITED STATES PATENT AND TRADEMARK OFFICE

Commissioner for Patents
United States Patents and Trademark Office
P.O.Box 1450
Alexandria, VA 22313-1450
www.uspto.gov

DO NOT USE IN PALM PRINTER

THIRD PARTY REQUESTER'S CORRESPONDENCE ADDRESS
FOLEY AND LARDNER LLP
3000 K STREET NW
SUITE 500
WASHINGTON, DC 20007

Date:
MAILED
FEB 17 2012
CENTRAL REEXAMINATION UNIT

Transmittal of Communication to Third Party Requester
Inter Partes Reexamination

REEXAMINATION CONTROL NO. : 95001664
PATENT NO. : 6885106
TECHNOLOGY CENTER : 3999
ART UNIT : 3992

Enclosed is a copy of the latest communication from the United States Patent and Trademark Office in the above identified Reexamination proceeding. 37 CFR 1.903.

Prior to the filing of a Notice of Appeal, each time the patent owner responds to this communication, the third party requester of the inter partes reexamination may once file written comments within a period of 30 days from the date of service of the patent owner's response. This 30-day time period is statutory (35 U.S.C. 314(b)(2)), and, as such, it cannot be extended. See also 37 CFR 1.947.

If an ex parte reexamination has been merged with the inter partes reexamination, no responsive submission by any ex parte third party requester is permitted.

All correspondence relating to this inter partes reexamination proceeding should be directed to the Central Reexamination Unit at the mail, FAX, or hand-carry addresses given at the end of the communication enclosed with this transmittal.

UNITED STATES PATENT AND TRADEMARK OFFICE

Commissioner for Patents
United States Patent and Trademark Office
P.O. Box 1450
Alexandria, VA 22313-1450
www.uspto.gov

Robert Greene Sterne
STERNE, KESSLER, GOLDSTEIN
& FOX P.L.L.C.
1100 NEW YORK AVE., NW
WASHINGTON, DC 20005

(For Patent Owner)

MAILED

FEB 17 2012

CENTRAL REEXAMINATION UNIT

FOLEY AND LARDNER LLP
3000 K STREET NW
SUITE 500
WASHINGTON, DC 20007

(For Third Party Requester)

In re: Damberg *et al.*
Inter Partes Reexamination Proceeding
Control No.: 95/001,664
Deposited: June 17, 2011
For: U.S. Patent No.: 6,885,106

DECISION ON PETITION
UNDER 37 CFR § 1.181

This is a decision on a petition filed by the patent owner on November 11, 2011, entitled: "Petition under 37 C.F.R. § 1.181 to Withdraw the Pending Office Action and *Ultra Vires* Requirement for Information" [hereinafter "the petition"].

The petition is a request to the Director to exercise his discretion pursuant to 37 CFR § 1.181 to review the examiner's requirement for information.

The petition is before the Assistant Deputy Commissioner for Patent Operations, who is acting in a capacity to oversee the Central Reexamination Unit. The petition is dismissed.

REVIEW OF RELEVANT FACTS

- U.S. Patent No. 6,885,106 issued on April 26, 2005.
- A request for *inter partes* reexamination was filed on June 17, 2011 and assigned control no. 95/001,664.
- *Inter partes* reexamination was ordered on September 8, 2011.
- The examiner issued a rejection on September 20, 2011. Included in the action was a Request for Information under 37 CFR § 1.105.
- On November 11, 2011, the patent owner filed the instant petition.
- On December 20, 2011, patent owner responded to the Office action. The response included a partial response to the requirement for information.
- Various other petitions have been filed. This is a decision only on the above noted petition.

DECISION

Patent owner ["petitioner"] argues the examiner's requirement for information under 37 CFR § 1.105 was *ultra vires* and requests that the requirement and the previous Office action be withdrawn.

The examiner, in the prior Office action, required three particular kinds of information: (1) a particular exhibit from litigation involving patent owner; (2) names of particular items known to patent owner that a allow a claimed characteristic; and (3) names of particular items known to patent owner that would not allow a claimed characteristic.

Petitioner claims that the requirement was improper for various reasons. Petitioner's complaint only goes toward items (2) and (3) required by the examiner. The petition is not drawn towards item (1), and patent owner has stated in its response to the Office action that it provided the requested exhibit of item (1). The response to the Office action did not provide materials requested as to items (2) and (3), citing the petition and the arguments from the petition as satisfying the requirements.

The examiner has indicated via informal discussion[1] with his supervisor that the patent owner's reply as to items (2) and (3) is satisfactory, and he will not hold the reply as incomplete or nonresponsive due to an incomplete reply as to those items. *See* MPEP §§ 704.12(b)-(c). Accordingly, patent owner did not actually have to supply information as to (2) and (3). The entire point of the petition was petitioner's complaint that it would be impossible and/or unreasonable to reply to those requirements, and failing to do so would risk its response being held incomplete or nonresponsive. Petitioner did not in fact provide the required information, but nonetheless its response is not deemed nonresponsive or incomplete for that reason. Accordingly, the petition and the request to remove the examiner's requirement as to items (2) and (3) is moot.

The petition is dismissed as moot.

CONCLUSION

1. The petition filed November 11, 2011 is dismissed as moot.

2. Telephone inquiries related to this decision should be directed to Mark Reinhart, Supervisory Patent Examiner, at (571) 272-1611 or in his absence to the undersigned at (571) 272-0700.

Robert J. Oberleitner,
Assistant Deputy Commissioner for Patent Operations and
Acting Director, Central Reexamination Unit

[1] Informal discussions may inform the deciding official but are neither made of record nor sent to the parties. MPEP § 1002.01.

UNITED STATES PATENT AND TRADEMARK OFFICE

UNITED STATES DEPARTMENT OF COMMERCE
United States Patent and Trademark Office
Address: COMMISSIONER FOR PATENTS
P.O. Box 1450
Alexandria, Virginia 22313-1450
www.uspto.gov

APPLICATION NO.	FILING DATE	FIRST NAMED INVENTOR	ATTORNEY DOCKET NO.	CONFIRMATION NO.
95/001,664	06/17/2011	6,885,106 B1	2422.015REX1	8714

101608 7590 02/28/2012

Sterne, Kessler, Goldstein & Fox P.L..L.C.
1100 New York Avenue, NW
Washington, DC 20005

EXAMINER	
ART UNIT	PAPER NUMBER

DATE MAILED: 02/28/2012

Please find below and/or attached an Office communication concerning this application or proceeding.

UNITED STATES PATENT AND TRADEMARK OFFICE

Commissioner for Patents
United States Patents and Trademark Office
P.O.Box 1450
Alexandria, VA 22313-1450
www.uspto.gov

DO NOT USE IN PALM PRINTER

THIRD PARTY REQUESTER'S CORRESPONDENCE ADDRESS

FOLEY AND LARDNER LLP
3000 K STREET NW
SUITE 500
WASHINGTON, DC 20007

Date: 2-28-12

Transmittal of Communication to Third Party Requester
Inter Partes Reexamination

REEXAMINATION CONTROL NO. : 95001664
PATENT NO. : 6885106
TECHNOLOGY CENTER : 3999
ART UNIT : 3992

Enclosed is a copy of the latest communication from the United States Patent and Trademark Office in the above identified Reexamination proceeding. 37 CFR 1.903.

Prior to the filing of a Notice of Appeal, each time the patent owner responds to this communication, the third party requester of the inter partes reexamination may once file written comments within a period of 30 days from the date of service of the patent owner's response. This 30-day time period is statutory (35 U.S.C. 314(b)(2)), and, as such, it cannot be extended. See also 37 CFR 1.947.

If an ex parte reexamination has been merged with the inter partes reexamination, no responsive submission by any ex parte third party requester is permitted.

All correspondence relating to this inter partes reexamination proceeding should be directed to the Central Reexamination Unit at the mail, FAX, or hand-carry addresses given at the end of the communication enclosed with this transmittal.

UNITED STATES PATENT AND TRADEMARK OFFICE

Commissioner for Patents
United States Patent and Trademark Office
P.O. Box 1450
Alexandria, VA 22313-1450
www.uspto.gov

MAILED

FEB 28 2012

CENTRAL REEXAMINATION UNIT

Sterne, Kessler, Goldstein, & Fox
1100 New York Avenue, NW
Washington, DC 20005

(For Patent Owner)

Foley and Lardner
3000 K Street NW, Suite 500
Washington, DC 20007

(For Third Party Requester)

In re Damberg *et al.*
Inter Partes Reexamination Proceeding
Control No. 95/001,664
Filed: June 17, 2011
For: U.S. Patent No. 6,885,106

: **DECISION ON**
: **PETITION UNDER**
: **§ 1.183**

This is a decision on the November 11, 2011 patent owner petition entitled "Petition to Temporarily Suspend Prosecution Under 37 C.F.R. § 1.183" and on the November 23, 2011 third party opposition paper to that petition.

The patent owner petition and third party opposition are before the Office of Patent Legal Administration.

The instant petition under 37 C.F.R. § 1.183 is **dismissed as moot**.

BACKGROUND

1. On January 25, 2005, U.S. Patent Number 6,846,477 B2 ("the '477 patent") was issued to Keich *et al.*

2. On June 17, 2011, third party requester filed a request for *inter partes* reexamination of the '477 patent and the resulting reexamination proceeding was assigned control number 95/001,664 ("the '1664 proceeding"). The real party in interest was identified as Merial.

3. On September 8, 2011, the Office issued an order in the '1664 proceeding granting the third party's request for *inter partes* reexamination.

4. On September 20, 2011, the Office issued a non-final action in the '1664 proceeding.

5. On November 11, 2011, patent owner filed a petition under § 1.181 to withdraw the pending Office action. The patent owner filed further petitions; the first filed under § 1.182 to expedite the decision on the petition under § 1.181; the second under § 1.183 to temporarily suspend prosecution.

6. On November 23, 2011, third party requester filed a petition under § 1.182 for a decision on the pending petitions "in support of special dispatch," and an opposition to the petition under § 1.183.

7. On December 20, 2011, patent owner filed a response to the Office action of September 20, 2011.

8. On January 19, 2012, third party requester filed comments responsive to the Office action and patent owner response.

9. On February 15, 2012, the Office mailed a decision expunging the third party's petition filed on November 23, 2011.

10. On February 17, 2012, The Office issued a decision dismissing the November 11, 2011 petition under § 1.181 as moot.

STATUTES, REGULATIONS, AND PATENT EXAMINING PROCEDURES

37 C.F.R. § 1.181 provides, in pertinent part:

> (f) The mere filing of a petition will not stay any period for reply that may be running against the application, nor act as a stay of other proceedings.

37 C.F.R. § 1.182 states:

> All situations not specifically provided for in the regulations of this part will be decided in accordance with the merits of each situation by or under the authority of the Director, subject to such other requirements as may be imposed, and such decision will be communicated to the interested parties in writing. Any petition seeking a decision under this section must be accompanied by the petition fee set forth in § 1.17(f).

37 C.F.R. § 1.183 states:

> In an extraordinary situation, when justice requires, any requirement of the regulations in this part which is not a requirement of the statutes may be suspended or waived by the Director or the Director's designee, sua sponte, or on petition of the interested party, subject to such other requirements as may be imposed. Any petition under this section must be accompanied by the petition fee set forth in § 1.17(f).

35 U.S.C. 314(c) provides:

> (c) SPECIAL DISPATCH. — Unless otherwise provided by the Director for good cause, all inter partes reexamination proceedings under this section, including any appeal to the Board of Patent Appeals and Interferences, shall be conducted with special dispatch within the Office.

37 C.F.R. § 1.103 provides, in pertinent part:

> § 1.103 Suspension of action by the Office.
> (a) Suspension for cause. On request of the applicant, the Office may grant a suspension of action by the Office under this paragraph for good and sufficient cause. The Office will not suspend action if a reply by applicant to an Office action is outstanding. Any petition for suspension of action under this paragraph must specify a period of suspension not exceeding six months. Any petition for suspension of action under this paragraph must also include:
> (1) A showing of good and sufficient cause for suspension of action; and
> (2) The fee set forth in § 1.17(g), unless such cause is the fault of the Office.

DECISION

The present patent owner petition was filed on November 11, 2011, seeking that prosecution in the proceeding be suspended.

The Request to Temporarily Suspend Prosecution

Patent owner has requested, in the November 11, 2011 petition, relief on the grounds that the patent owner cannot properly respond to the September 20, 2011 Office action as issued without a detrimental impact upon patent owner's legal protections in current and future litigation. At the present time, the patent owner and requester have filed responses to the prior Office action, on December 20, 2011, and January 19, 2012, respectively. The Office has issued, on February 17, 2012, a decision dismissing the November 11, 2011 petition and informing the patent owner that the information submission requirement has been deemed to have been met by patent owner's December 20, 2011 response.

Petitioner premised the requested suspension on the effect of filing a patent owner response before the November 11, 2011 petition under § 1.181 has been answered, so that patent owner will not be prejudiced by the previously made information submission requirement. The supporting rationale for the suspension is now inapplicable since the patent owner response has been filed and the petition under § 1.181 has been answered.

Accordingly, the request to waive regulations and suspend the '1664 *inter partes* reexamination proceeding is **dismissed as moot.**

CONCLUSION

1. The request to suspend the '1664 *ex parte* reexamination proceeding is **dismissed**.

2. Telephone inquiries related to this decision should be directed to Michael Cygan, Legal Advisor, at (571) 272-7700.

Brian E. Hanlon
Director
Office of Patent Legal Administration

UNITED STATES PATENT AND TRADEMARK OFFICE

UNITED STATES DEPARTMENT OF COMMERCE
United States Patent and Trademark Office
Address: COMMISSIONER FOR PATENTS
P.O. Box 1450
Alexandria, Virginia 22313-1450
www.uspto.gov

APPLICATION NO.	FILING DATE	FIRST NAMED INVENTOR	ATTORNEY DOCKET NO.	CONFIRMATION NO.
95/001,664	06/17/2011	6,885,106 B1	2422.015REX1	8714

101608 7590 04/10/2012

Sterne, Kessler, Goldstein & Fox P.L..L.C.
1100 New York Avenue, NW
Washington, DC 20005

EXAMINER	
ART UNIT	PAPER NUMBER

DATE MAILED: 04/10/2012

Please find below and/or attached an Office communication concerning this application or proceeding.

UNITED STATES PATENT AND TRADEMARK OFFICE

Commissioner for Patents
United States Patents and Trademark Office
P.O.Box 1450
Alexandria, VA 22313-1450
www.uspto.gov

DO NOT USE IN PALM PRINTER

THIRD PARTY REQUESTER'S CORRESPONDENCE ADDRESS
FOLEY AND LARDNER LLP
3000 K STREET NW
SUITE 500
WASHINGTON, DC 20007

Date:

MAILED

APR 10 2012

CENTRAL REEXAMINATION UNIT

Transmittal of Communication to Third Party Requester
Inter Partes Reexamination

REEXAMINATION CONTROL NO. : 95001664
PATENT NO. : 6885106
TECHNOLOGY CENTER : 3999
ART UNIT : 3992

Enclosed is a copy of the latest communication from the United States Patent and Trademark Office in the above identified Reexamination proceeding. 37 CFR 1.903.

Prior to the filing of a Notice of Appeal, each time the patent owner responds to this communication, the third party requester of the inter partes reexamination may once file written comments within a period of 30 days from the date of service of the patent owner's response. This 30-day time period is statutory (35 U.S.C. 314(b)(2)), and, as such, it cannot be extended. See also 37 CFR 1.947.

If an ex parte reexamination has been merged with the inter partes reexamination, no responsive submission by any ex parte third party requester is permitted.

All correspondence relating to this inter partes reexamination proceeding should be directed to the Central Reexamination Unit at the mail, FAX, or hand-carry addresses given at the end of the communication enclosed with this transmittal.

UNITED STATES PATENT AND TRADEMARK OFFICE

Commissioner for Patents
United States Patent and Trademark Office
P.O. Box 1450
Alexandria, VA 22313-1450
www.uspto.gov

MAILED

APR 10 2012

CENTRAL REEXAMINATION UNIT

Sterne, Kessler, Goldstein, & Fox PLLC
1100 New York Avenue, NW
Washington, DC 20005

(For Patent Owner)

Foley and Lardner
3000 K Street NW, Suite 500
Washington, DC 20007

(For Third Party Requester)

In re Damberg *et al.*
Inter Partes Reexamination Proceeding
Control No. 95/001,664
Filed: June 17, 2011
For: U.S. Patent No. 6,885,106 B1

: **DECISION**
: **GRANTING**
: **PETITIONS**

This is a decision on the patent owner's paper entitled "Response to Notice and Petition Under 37 C.F.R. § 1.183 for Waiver of 37 C.F.R. § 1.943(b) in Connection with Response to Office Action in Reexamination," filed on March 7, 2012. This is also a decision on the third party requester's paper entitled "Petition Under 37 C.F.R. 1.183 to Waive the Page Limit of 37 C.F.R. 1.943(b)," filed on March 16, 2012.[1]

The patent owner's petition under 37 CFR 1.183 and the third party requester's petition under 37 CFR 1.183 are before the Office of Patent Legal Administration.

The patent owner's petition and the third party requester's petitions are granted.

BACKGROUND

1. U.S. Patent Number 6,885,106 B1 (the '106 patent) issued to Damberg *et al.* on April 26, 2005, with claims 1-60.

2. A request for *inter partes* reexamination, assigned Reexamination Control No. 95/001,664 (the '664 proceeding), was filed by a third party requester on June 17, 2011. Sony Corporation and Sony Electronics, Inc. are identified as the real party in interest.

[1] This petition was originally filed January 19, 2012, and was ratified on March 16, 2012.

3. On September 8, 2011, an order granting reexamination of claims 1-60 of the '106 patent was mailed.

4. On September 20, 2011, the Office mailed a non-final Office action, rejecting claims 1-23, 25-36, and 41-47 and confirming claims 24, 37-40, and 48-60.

5. On October 28, 2011, the patent owner filed a petition requesting a two-month extension of time pursuant to 37 CFR 1.956 for filing a response to the September 20, 2011 non-final Office action.

6. On November 11, 2011, the patent owner filed a second petition requesting a two-month extension of time pursuant to 37 CFR 1.956 for its response to the non-final Office action.

7. On November 16, 2011, the Office mailed a decision granting patent owner a one-month extension of time for its response to the non-final Office action, setting the response due date to December 20, 2011.

8. On December, 20, 2011, the patent owner filed its response to the September 20, 2011 non-final Office action under 37 CFR 1.945.

9. On January 19, 2012, the third party requester filed a "PETITION UNDER 37 C.F.R. 1.183 TO WAIVE THE PAGE LIMIT OF 37 C.F.R. 1.943(b),"concurrently with its comments under 37 CFR 1.947.

10. On February 22, 2012, the Office issued a Notice of Improper Paper in *Inter Partes* Reexamination, stating that the patent owner's December 20, 2011 response submission fails to comply with the 50-page limit set by 37 CFR 1.943, and setting a time period of 15 days for the patent owner to file a corrected response submission.

11. On March 7, 2012, the patent owner filed a response to the February 22, 2012 Notice consisting of a petition under 37 CFR 1.183 requesting waiver of 37 CFR 1.943(b) for entry of its December 20, 2011 response as originally filed.

12. On March 16, 2012, the third party requester filed comments under 37 CFR 1.947 in response to the March 7, 2012 patent owner petition by ratifying and incorporating by reference its previously filed January 19, 2012 comments.

DECISION

I. Relevant Regulations and Procedure

37 CFR 1.183 provides:

In an extraordinary situation, when justice requires, any requirement of the regulations in this part which is not a requirement of the statutes may be suspended or waived by the Director or the Director's designee, *sua sponte*, or on petition of the interested party,

subject to such other requirements as may be imposed. Any petition under this section must be accompanied by the petition fee set forth in § 1.17(f).

37 CFR 1.943(b) provides:

> Responses by the patent owner and written comments by the third party requester shall not exceed 50 pages in length, excluding amendments, appendices of claims, and reference materials such as prior art references.

MPEP § 2667(I), (TYPES OF PAPERS RETURNED WITH CENTRAL REEXAMINATION UNIT DIRECTOR OR REEXAMINATION LEGAL ADVISOR APPROVAL REQUIRED), provides in pertinent part:

> Any affidavit or declaration (or a clearly defined portion thereof) that contains opinion(s) of the affiant/declarant, or argument(s) that the art either does or does not anticipate or render obvious the claims, or specific claim elements, of the patent under reexamination, is considered to be part of the comments submitted by the patent owner, or by the third party requester, and is subject to the page limit requirements of 37 CFR 1.943. Affidavits or declarations that are excluded from the page limit requirements include, for example, declarations attempting to swear behind (antedate) the filing date of a reference, or to establish the date of a printed publication, or declarations that provide comparative test data and an analysis of same. However, if the patent owner's affidavit or declaration includes any argument as to how an outstanding/proposed rejection is overcome, then the page(s) of the affidavit or declaration upon which the argument appears would be included against of the page limit count. Likewise, if a third party requester affidavit or declaration includes any argument as to how a rejection is supported, then the page(s) of the affidavit or declaration upon which the argument appears would be included against of the page limit count. Similarly, attached exhibits presenting data or drawings are not included against the page limit count, unless an exhibit or drawing includes argument as to how the outstanding rejection is overcome. Any page(s) of the exhibit or sheet(s) of drawings that include such argument would be included against the page limit count.

II. Patent Owner's March 7, 2012 Petition Under 37 CFR 1.183

In the instant patent owner petition under 37 CFR 1.183, the patent owner requests waiver of the requirement under 37 CFR 1.943(b) with respect to the 50-page limit for its response filed on December 20, 2011 to address the September 20, 2011 non-final Office action, and requests that the page limit be extended by 15 pages.[2]

In support of its request for waiver of the rule, the patent owner argues that additional pages are needed to respond to 80 substantive pages of the Office action that include 17 separate grounds

[2] Patent owner petition at 7.

of rejection over 18 separate references.[3] Finally, the patent owner asserts that it has "made a good faith effort to comply with the 50-page limit, making efforts to economize, avoid extraneous material and information already of record, and present arguments efficiently."[4]

Analysis and Findings

The instant patent owner petition under 37 CFR 1.183 has been fully considered. In this instance, petitioner patent owner's December 20, 2011 response submission is found to consist of 50 pages of remarks, which are subject to the 50 page limit. The patent owner response is also accompanied by a declaration under 37 CFR 1.132 of Ephraim Suhir, and a declaration under 37 CFR 1.131 of Craig Mitchell (Exhibit A). The Suhir declaration is also accompanied by a *curriculum vitae*, and Exhibits A and B. The Mitchell declaration is also accompanied by Exhibits B, C, C1-C11, C13-C15, D, D1-D14, D16, D18-21, D23, D24, D26-28, D30-D33, D36, D39, D40, D42-D44, D46-D55, D57-D66, D70-D79, D82-85, E1, E2, and F.[5]

It is noted that, for purposes of making an accurate determination of exactly how many additional pages over 50 are deemed to be needed for the response, a document is deemed to be subject to the 50-page length requirement when the document includes legal argument, *i.e.*, arguments of counsel such as, *e.g.*, arguments that the claims are patentable or unpatentable, or that are directed to how an outstanding or proposed rejection is overcome, or, in the case of a document filed by the requester, how an outstanding or proposed rejection is supported. Each determination of whether a document, such as an affidavit or declaration, contains information that will cause the document to be subject to the page count is made on a case-by-case basis. In determining whether a document such as an affidavit or declaration under 37 CFR 1.132, or any other document of a submission, includes legal argument, the Office analyzes whether the document is providing factual evidence, *i.e.*, evidence of **technological facts,** or whether the document contains argument that is merely an extension of the arguments of counsel. Factual evidence includes, for example, declarations that swear behind the filing date of a reference, that establish the date of a printed publication, that provide a technical explanation or technical definition of terms of art used by a reference, or that provide comparative test results and a scientific, or technological, analysis of the results (*see*, *e.g.*, MPEP 716.02). If a document is limited to factual evidence, the document is not included in the page count. In addition, affidavits or declarations limited to establishing commercial success, long-felt need and failure of others, scepticism of experts, or copying, as per MPEP 716.03-716.06, respectively, will not be included in the page count.

---

[3] *Id.* at 6.

[4] *Id.*

[5] Specifically, Exhibit B lists the exhibits attached to the §1.131 Mitchell declaration and gives a detailed description of the exhibits. Exhibit C is a claim chart showing support for the conception date of the patent claims. Exhibits C1-C11, and C13-C15 include pages from lab books and email communications. Exhibit D is a due diligence calendar. Exhibits D1-D14, D16, D18-21, D23, D24, D26-28, D30-D33, D36, D39, D40, D42-D44, D46-D55, D57-D66, D70-D79, and D82-85 include notes from staff meetings, design plans, research and development plans, email communications, and pages from lab books. Exhibits E1 and E2 are screen shots showing "Date Modified" for computer files to certain exhibits. Exhibit F is a 4-page claim chart providing support that the claimed invention was constructively reduced to practice on the filing date of provisional application.

It appears that the patent owner response submission is substantially compliant. Based on the specific facts set forth in the patent owner's petition under 37 CFR 1.183, the patent owner's showing in support of the request for waiver of the 50-page limit of 37 CFR 1.943(b) by attempting to draft a response in compliance with the 50-page limit and submitting the resulting response, and the individual facts and circumstances of this case (such as the length of the September 20, 2011 non-final Office action),[6] to the extent that the response may be over the regulatory limit, if at all, 37 CFR 1.943(b) it is hereby waived to make the December 20, 2011 patent owner response submission page length compliant.

III. The Third Party Requester's Comments and Petition under 37 CFR 1.183

On January 19, 2012, the third party requester filed a petition under 37 CFR 1.183 for waiver of the page limit of 37 CFR 1.943(b), concurrently with its comments submission under 37 CFR 1.947. The January 19, 2012 comments submission **will not be considered**, and the accompanying petition to waive is moot, since the patent owner, as explained in the February 22, 2012 Notice of Improper Paper, did not in fact respond on December 20, 2011 to the Office action in accordance with the rules. See also MPEP § 2667(I)(A)(2).

On March 16, 2012, the third party requester filed comments under 37 CFR 1.947 in response to the March 7, 2012 patent owner petition by ratifying and incorporating by reference its previously filed January 19, 2012 comments. The March 16, 2012 third party comments submission is also taken as a ratification of the January 19, 2012 third party requester petition requesting page limit waiver for its comments submission under 37 CFR 1.947. Thus, the papers submitted January 19, 2012 are effectively before the Office for a determination as to the page limit requirements should be waived and the comments entered.[7]

In its petition, the third party requester requests waiver of the requirement under 37 CFR 1.943(b) with respect to the 50-page limit for third party requester's comments submission, and requests that the page limit be extended by 17 pages.[8] In support of its request for waiver of the rule, the third party requester argues that additional pages are needed to address the 95 newly presented claims.

Analysis and Findings

The requester's March 16, 2012 comments submission comprises 67 pages of remarks and appears to be one-and-a-half or double-spaced. The accompanying declaration under 37 CFR 1.132 of Dr. Jean-Paul Clech also appears to be one-and-a half or double spaced. It is noted that, in this instance, 67 pages of the remarks portion of the third party requester's March 16, 2012 comments submission would be counted toward the page limit (i.e., pages 1-67). Exhibits 1-17 included in the comments submission contain patent documents, case law, a Federal Register

[6] On its face, the September 20, 2011 non-final Office action is 109 pages in length. However, as stated by the examiner in the February 22, 2012 Notice of Improper Paper, the adopted rejections span only 80 pages of the Office action to which the patent owner would need to respond.

[7] Although, the March 16, 2012 response is technically premature, because it was submitted prior to the waiver of the patent owner petition, no purpose would be served by dismissing the third-party requester's petition and asking for a further ratification of the January 19, 2012 submissions other than to further delay the proceeding.

[8] Third party requester petition at 2.

Notice, a technical report, and litigation documents containing no legal argument, all of which do not count toward the regulatory page limit. The §1.132 Clech declaration is found to be replete with legal argumentation/conclusion. For this reason, the entirety of the 10-page §1.132 Clech declaration is counted toward the page limit. See *inter alia* the legal argument/conclusion in paragraphs 9-11, 14-16, and 18 of the §1.132 Clech declaration. Attachments 1-9 accompanying the Clech declaration are journal articles and do not count toward the regulatory page limit. The requester's March 16, 2012 comments submission is effectively 77 pages in length.

In this instance, the specific facts set forth in the third party requester's petition under 37 CFR 1.183, the third party requester's showing in support of the request for waiver of the 50-page limit of 37 CFR 1.943(b) by attempting to draft a comments in compliance with the 50-page limit, and submitting the resulting comments, which are in excess of 50 pages, and the individual facts and circumstances of this case (such as the 95 newly added claims in the patent owner's response), demonstrate an extraordinary situation in which justice requires suspension of the 50-page limit of 37 CFR 1.943(b).

Accordingly, the third party requester's petition under 37 CFR 1.183 is **granted** to the extent that the page limit of 37 CFR 1.943(b) is waived to the extent of permitting requester's comments submission to exceed the page limit by 27 pages. This waiver makes requester's March 16, 2012 comments submission page-length compliant.

CONCLUSION

1. The patent owner's March 7, 2012 petition under 37 CFR 1.183 is granted and the page limit of 37 CFR 1.943(b) is waived to the extent of patent owner's December 20, 2011 response submission. This waiver makes patent owner's December 20, 2011 response submission page-length compliant.

2. The third party requester petition (originally submitted January 19, 2012, and ratified on March 16, 2012) under 37 CFR 1.183 is granted and the page limit of 37 CFR 1.943(b) is waived to the extent that third party requester's comments submission filed on March 16, 2012 not exceed 77 pages in length. This waiver makes the March 16, 2012 third party requester comments submission page-length compliant.

3. Any questions concerning this communication should be directed to Susy Tsang-Foster, Legal Advisor, at (571) 272-7711.

Pinchus M. Laufer
Senior Legal Advisor
Office of Patent Legal Administration

April 4, 2012

UNITED STATES PATENT AND TRADEMARK OFFICE

UNITED STATES DEPARTMENT OF COMMERCE
United States Patent and Trademark Office
Address: COMMISSIONER FOR PATENTS
P.O. Box 1450
Alexandria, Virginia 22313-1450
www.uspto.gov

APPLICATION NO.	FILING DATE	FIRST NAMED INVENTOR	ATTORNEY DOCKET NO.	CONFIRMATION NO.
95/001,665	06/17/2011	6825683	42299.21	9958

13992 7590 02/09/2012

NDQ Special Reexam Group
1000 Louisiana Street, Fifty-Third Floor
Houston, TX 77002

EXAMINER	
ART UNIT	PAPER NUMBER

DATE MAILED: 02/09/2012

Please find below and/or attached an Office communication concerning this application or proceeding.

UNITED STATES PATENT AND TRADEMARK OFFICE

Commissioner for Patents
United States Patents and Trademark Office
P.O.Box 1450
Alexandria, VA 22313-1450
www.uspto.gov

DO NOT USE IN PALM PRINTER

THIRD PARTY REQUESTER'S CORRESPONDENCE ADDRESS

David L. McCombs
HAYNES AND BOONE, LLP, IP SECTION
2323 Victory Ave., Suite 700
Dallas, TX 75219

Date:

MAILED

FEB 09 2012

CENTRAL REEXAMINATION UNIT

Transmittal of Communication to Third Party Requester
Inter Partes Reexamination

REEXAMINATION CONTROL NO. : 95001665
PATENT NO. : 6825683
TECHNOLOGY CENTER : 3999
ART UNIT : 3992

Enclosed is a copy of the latest communication from the United States Patent and Trademark Office in the above identified Reexamination proceeding. 37 CFR 1.903.

Prior to the filing of a Notice of Appeal, each time the patent owner responds to this communication, the third party requester of the inter partes reexamination may once file written comments within a period of 30 days from the date of service of the patent owner's response. This 30-day time period is statutory (35 U.S.C. 314(b)(2)), and, as such, it cannot be extended. See also 37 CFR 1.947.

If an ex parte reexamination has been merged with the inter partes reexamination, no responsive submission by any ex parte third party requester is permitted.

All correspondence relating to this inter partes reexamination proceeding should be directed to the Central Reexamination Unit at the mail, FAX, or hand-carry addresses given at the end of the communication enclosed with this transmittal.

UNITED STATES PATENT AND TRADEMARK OFFICE

Commissioner for Patents
United States Patent and Trademark Office
P.O. Box 1450
Alexandria, VA 22313-1450
www.uspto.gov

MAILED

FEB 09 2012

CENTRAL REEXAMINATION UNIT

NDQ Special Reexam Group
1000 Louisana Street, Fifty-Third Floor
Houston, TX 77002

(For Patent Owner)

Haynes and Boone, LLP
IP Section
2323 Victory Avenue, Suite 700
Dallas, TX 75219

(For Third Party Requester)

Inter Partes Reexamination Proceeding
Control No. 95/001,665
Filed: June 17, 2011
For: U.S. Patent No. 6,825,683

: **DECISION**
: **GRANTING**
: **PETITION**
:

This is a decision on the third party requester's petition paper entitled "PETITION TO WAIVE PAGE LIMIT REQUIREMENT FOR THIRD PARTY REQUESTER COMMENTS," filed on November 29, 2011. The petition requests waiver of the requirement of 37 CFR 1.943(b) that the written comments by the third party requester not exceed fifty (50) pages in length, and requests that the page limit be extended to 75 pages. The third party requester timely filed comments under 37 CFR 1.947 concurrently with the petition.

The petition is before the Office of Patent Legal Administration for consideration.

The third party requester's petition under 37 CFR 1.183 to waive the 37 CFR 1.943(b) limit as to the number of pages permitted in comments by third party requester is granted to the extent that the page limit for comments by the third party requester is extended to not exceed 78 pages in length.

DECISION

I. Relevant Regulations and Procedure

37 CFR 1.183 provides:

In an extraordinary situation, when justice requires, any requirement of the regulations in this part which is not a requirement of the statutes may be suspended or waived by the Director or the Director's

designee, *sua sponte*, or on petition of the interested party, subject to such other requirements as may be imposed. Any petition under this section must be accompanied by the petition fee set forth in § 1.17(f).

37 CFR 1.943(b) provides:

Responses by the patent owner and written comments by the third party requester shall not exceed 50 pages in length, excluding amendments, appendices of claims, and reference materials such as prior art references.

MPEP § 2667(I), (TYPES OF PAPERS RETURNED WITH CENTRAL REEXAMINATION UNIT DIRECTOR OR REEXAMINATION LEGAL ADVISOR APPROVAL REQUIRED), provides in pertinent part:

*****

Any affidavit or declaration (or a clearly defined portion thereof) that contains opinion(s) of the affiant/declarant, or argument(s) that the art either does or does not anticipate or render obvious the claims, or specific claim elements, of the patent under reexamination, is considered to be part of the comments submitted by the patent owner, or by the third party requester, and is subject to the page limit requirements of 37 CFR 1.943. Affidavits or declarations that are excluded from the page limit requirements include, for example, declarations attempting to swear behind (antedate) the filing date of a reference, or to establish the date of a printed publication, or declarations that provide comparative test data and an analysis of same. However, if the patent owner's affidavit or declaration includes any argument as to how an outstanding/proposed rejection is overcome, then the page(s) of the affidavit or declaration upon which the argument appears would be included against of the page limit count. Likewise, if a third party requester affidavit or declaration includes any argument as to how a rejection is supported, then the page(s) of the affidavit or declaration upon which the argument appears would be included against of the page limit count. Similarly, attached exhibits presenting data or drawings are not included against the page limit count, unless an exhibit or drawing includes argument as to how the outstanding rejection is overcome. Any page(s) of the exhibit or sheet(s) of drawings that include such argument would be included against the page limit count.

II. The Third Party Requester's Petition

In the instant petition, the third party requester requests waiver of the requirement under 37 CFR 1.943(b) with respect to the 50-page limit for the third party requester's comments filed on November 29, 2011, and requests that the page limit be extended to 75 pages.[1] In support of its request for waiver of the rule, the third party requester argues that additional pages are needed to effectively address the patent owner remarks and each of the16 newly presented claims.

III. Analysis and Findings

The instant petition under 37 CFR 1.183 has been fully considered. In this instance, petitioner third party requester's November 29, 2011 written comments include 31 pages of remarks, which

[1] Petition at page 2.

are subject to the 50 page limit.[2] The third party requester comments are also accompanied by Exhibits A, and GG. A discussion of the counting of pages for the Exhibits A and GG now follows:

A document is deemed to be subject to the 50-page length requirement when the document includes legal argument, i.e., arguments of counsel such as, e.g., arguments that the claims are patentable or unpatentable, or that are directed to how an outstanding or proposed rejection is overcome, or, in the case of a document filed by the requester, how an outstanding or proposed rejection is supported. There are no *per se* rules for determining whether a document, such as an affidavit or declaration, contains a legal argument that will cause the document to be subject to the page count. Each determination is made on a case-by-case basis. In determining whether a document such as an affidavit or declaration under 37 CFR 1.132, or any other document of a submission, includes legal argument, the Office analyzes whether the document is providing factual evidence, i.e., evidence of **technological** facts, or whether the document is merely an extension of the arguments of counsel. Factual evidence includes, for example, declarations that swear behind the filing date of a reference, that establish the date of a printed publication, that provide a technical explanation or technical definition of terms of art used by a reference, or that provide comparative test results and a scientific, or technological, analysis of the results (see, e.g., MPEP 716.02). If a document is limited to factual evidence, the document is not included in the page count. In addition, affidavits or declarations **limited to** establishing commercial success, long-felt need and failure of others, skepticism of experts, or copying, as per MPEP 716.03 -716.06, respectively, will not be included in the page count.

Exhibit A is a 11-page declaration under 37 CFR 1.132 of Dr. Ray Mercer, which is found to be replete with legal argumentation/conclusion. For this reason, the entirety of the 11-page §1.132 Mercer declaration is counted toward the page limit. See *inter alia* the legal argument/conclusion made on page 4, paragraphs 12-17; on page 5, paragraphs 17-23; on page 6, paragraphs 23-25; on page 7, paragraph 31, on page 8, paragraphs 31, and 34-36, on page 9, paragraphs 42-44, on page 10, paragraphs 44-47, and on page 11, paragraphs 47 and 48.

The 11-page §1.132 Mercer declaration is also accompanied by Appendices 1-3. Appendices 1 and 2 are references, which do not count toward the page limit. Appendix 3 is a *curriculum vitae* of Dr. Ray Mercer, which also does not count toward the page limit.

Exhibit GG are claim charts applying the prior art to the newly added claims. These claim charts, totaling 36 pages, count toward the page limit.

Accordingly, the November 29, 2011 third party requester comments submission includes *in toto* 78 pages in length as to pages counting toward the regulatory page limit.

Upon review of the submitted response for economizing, extraneous material, and arrangement, without repetition of information already of record, it is found that the 28 pages of arguments in excess of 50 required to complete the third party requester's comments are not unreasonable in this instance, in view of the present facts and circumstances. This includes the point that patent

[2] This decision is limited to the page-limit issue and the propriety of third party requester's written comments will be reviewed by the Central Reexamination Unit (CRU).

owner's response added 16 new claims. It is deemed equitable to waive the 50-page limit of 37 CFR 1.943(b) in this instance.

37 CFR 1.183 permits waiver of the page limitation requirement of the regulations in an extraordinary situation when justice requires. Under the facts and circumstances currently of record in the present reexamination proceeding, the instant third party requester petition is deemed to establish that a waiver of 37 CFR 1.943(b) to the extent of permitting third party requester's comments to run 78 pages in length is appropriate in the interest of justice.

Accordingly, the third party requester's petition under 37 CFR 1.183 is **granted** to the extent that the page limit of 37 CFR 1.943(b) is waived to the extent of permitting the requester's comments submission to exceed the page limit by 28 pages. This waiver makes the requester's November 29, 2011 comments submission page-length compliant.

CONCLUSION

1. The third party requester's petition under 37 CFR 1.183 is granted, and the page limit of 37 CFR 1.943(b) is waived to the extent that the third party requester's comments filed on November 29, 2011 may exceed the page limit by 28 pages. This waiver makes the November 29, 2011 third party requester comments submission page-length compliant.

2. Telephone inquiries related to the present decision should be directed to the Susy Tsang-Foster, Legal Advisor, at 571-272-7711.

Pinchus M. Laufer
Senior Legal Advisor
Office of Patent Legal Administration

2/4/2012

UNITED STATES PATENT AND TRADEMARK OFFICE

UNITED STATES DEPARTMENT OF COMMERCE
United States Patent and Trademark Office
Address: COMMISSIONER FOR PATENTS
P.O. Box 1450
Alexandria, Virginia 22313-1450
www.uspto.gov

APPLICATION NO.	FILING DATE	FIRST NAMED INVENTOR	ATTORNEY DOCKET NO.	CONFIRMATION NO.
95/001,667	07/15/2011	William Stern	A1047/20011	3714

67395 7590 02/22/2012

GREENBERG TRAURIG (NJ)
200 PARK AVE.
P.O. BOX 677
FLORHAM PARK, NJ 07932

EXAMINER	
ART UNIT	PAPER NUMBER

DATE MAILED: 02/22/2012

Please find below and/or attached an Office communication concerning this application or proceeding.

UNITED STATES PATENT AND TRADEMARK OFFICE

Commissioner for Patents
United States Patents and Trademark Office
P.O.Box 1450
Alexandria, VA 22313-1450
www.uspto.gov

DO NOT USE IN PALM PRINTER

THIRD PARTY REQUESTER'S CORRESPONDENCE ADDRESS
CAESAR, RIVISE, BERNSTEIN, COHEN & POKOTILOW, LTD.
1635 MARKET STREET
11th FLOOR, SEVEN PENN CENTER
PHILADELPHIA, PA 19103-2212

Date:
MAILED
FEB 22 2012
CENTRAL REEXAMINATION UNIT

Transmittal of Communication to Third Party Requester
Inter Partes Reexamination

REEXAMINATION CONTROL NO. : 95001667
PATENT NO. : RE40812
TECHNOLOGY CENTER : 3999
ART UNIT : 3991

Enclosed is a copy of the latest communication from the United States Patent and Trademark Office in the above identified Reexamination proceeding. 37 CFR 1.903.

Prior to the filing of a Notice of Appeal, each time the patent owner responds to this communication, the third party requester of the inter partes reexamination may once file written comments within a period of 30 days from the date of service of the patent owner's response. This 30-day time period is statutory (35 U.S.C. 314(b)(2)), and, as such, it cannot be extended. See also 37 CFR 1.947.

If an ex parte reexamination has been merged with the inter partes reexamination, no responsive submission by any ex parte third party requester is permitted.

All correspondence relating to this inter partes reexamination proceeding should be directed to the Central Reexamination Unit at the mail, FAX, or hand-carry addresses given at the end of the communication enclosed with this transmittal.

UNITED STATES PATENT AND TRADEMARK OFFICE

Commissioner for Patents
United States Patent and Trademark Office
P.O. Box 1450
Alexandria, VA 22313-1450
www.uspto.gov

MAILED

FEB 22 2012

CENTRAL REEXAMINATION UNIT

Greenberg Traurig (For Patent Owner)
200 Park Ave.
P. O. Box 677
Florham Park, NJ 07932

Caesar, Revise, Bernstein, Cohen & Pokotilow, LTD (For Third Party Requester)
11th Floor, Seven Penn Center
1635 Market Street
Philadelphia, PA 19103-2212

In re Stern :
Inter partes Reexamination Proceeding : **DECISION**
Control No: 95/001,667 : **DISMISSING PETITION**
Filing Date: July 15, 2011 : **AND EXPUNGING**
U.S. Patent No.: RE 40,812 : **IMPROPER PAPER**

This decision addresses the following petitions and opposition papers:

- The November 8, 2011 patent owner petition, entitled "Petition under 37 C.F.R. §§ 1.182 and 1.937 to Suspend Inter Partes Reexamination" (the November 8, 2011 petition to suspend);

- The November 18, 2011 requester opposition paper, entitled "Petition under 37 CFR 1.182 and 1.183 to Accept Response to Patent Owner's Petition and Response to Patent Owner's Petition in Inter Partes Reexamination of U.S. Patent No. RE40812" (requester's November 18, 2011 opposition paper);

- The January 9, 2012 requester opposition paper, entitled "Submission Supplemental to the Response to Patent Owner's Petition in *Inter Partes* Reexamination of U.S. Patent RE 40812" (requester's January 9, 2012 supplemental opposition paper); and

- The February 9, 2012 patent owner paper entitled "Request to Strike and Return Third Party Requester's Supplemental Submission Dated January 9, 2012" (patent owner's February 9, 2012 opposition paper).

The November 8, 2011 patent owner petition to suspend, the November 18, 2011 and January 9, 2012 requester opposition papers, the February 9, 2012 patent owner opposition paper, and the record as a whole, are before the Office of Patent Legal Administration for consideration.

SUMMARY

The November 8, 2011 petition to suspend is **dismissed**.

The February 9, 2012 opposition paper filed by the patent owner, is an **improper paper**. Because this paper has been scanned into the electronic Image File Wrapper (IFW), this paper cannot be physically returned to the sender. Thus, the February 9, 2012 opposition paper filed by the patent owner will be *sua sponte* **expunged** from the record by marking the papers "closed" and "non-public," and will not constitute part of the record of the present reexamination proceeding.

DECISION

The November 8, 2011 Petition to Suspend

The patent owner requests the Office to suspend the present *inter partes* reexamination proceeding.

MPEP 2686.04 provides, in pertinent part (emphasis added):

> [35 U.S.C. 314(c)][1] thus authorizes the Director of the USPTO **to suspend (stay) reexamination proceedings, where there is good cause to do so**, pending the conclusion of litigation based on a potential for termination of a reexamination prosecution under 35 U.S.C. 317(b). Thus, a District Court decision that is pending appeal on the validity of the same claims considered in an *inter partes* reexamination proceeding may provide the requisite statutory "good cause" for suspension, due to the real possibility that the 35 U.S.C. 317(b) estoppel may attach in the near future to bar/terminate the reexamination proceeding.

Factors to be considered in determining whether it is appropriate to suspend action in the reexamination are:

A. Whether the third party requester is a party to the litigation;

B. Whether the claims in suit are identical to the claims under reexamination;

C. Whether the issue(s) raised in the reexamination proceeding are the same issue(s) that were raised or could have been raised by the requester in the litigation;

D. Whether the litigation has advanced to a late enough stage that there is a sufficient probability that a final decision will be adverse to the requester; and

---

[1] 35 U.S.C. 314(c) provides, in pertinent part (emphasis added):

> **Unless otherwise provided by the Director for good cause**, all *inter partes* reexamination proceedings under this section, including any appeal to the Board of Patent Appeals and Interferences, shall be conducted with special dispatch within the Office.

E. Whether there is a concurrent *ex parte* reexamination proceeding for the patent.[2]

The patent owner effectively argues that good cause exists to suspend the present proceeding because the requester, Apotex, Inc., is a party to the copending litigation, *Unigene Labs., Inc. v. v. Apotex, Inc.*, 655 F.3d 1352, 99 USPQ2d 1858 (Fed. Cir. 2011). The Office has confirmed that the requester, Apotex Inc., is a party to the copending litigation, which satisfies item A.[3]

The patent owner further asserts that the claims at issue in the reexamination are identical to those in the litigation. However, as argued by the requester in its November 18, 2011 opposition paper, the patent owner has only provided evidence that independent claim 19 of the patent under reexamination is the subject of the copending litigation. In the present reexamination proceeding, independent claims 13 and 19, and dependent claims 14, 16, 17, and 24-29 are subject to reexamination. "Good cause" for suspension pending the conclusion of litigation is based on a potential for the termination of reexamination prosecution under 35 U.S.C. 317(b). See MPEP 2686.04, quoted above. If a claim under reexamination is not the subject of the copending litigation, then the estoppel provisions of 35 U.S.C. 317(b) would not apply to the final outcome of the copending litigation as to that patent claim, because there would be no "final decision that the party has not sustained its burden of proving the invalidity" of the patent claim. Thus, there is no "potential for termination" of this reexamination proceeding as to the non-litigated claims. A suspension of the present reexamination proceeding would unfairly deprive the requester of its statutory right to a determination of the patentability of the claims that are not the subject of the litigation, and thus not potentially subject to the estoppel provisions of 35 U.S.C. 317. For these reasons, the patent owner has not shown that the claims at issue in the litigation are identical to the claims in reexamination. In fact, the patent owner appears to admit that the claims are not identical. Thus, item B has not been shown to have been satisfied.

Regarding item C, in view of the fact that the claims at issue in the litigation are not identical to the claims under reexamination, the patent owner has not shown that the issues raised in the reexamination proceeding *as to each of the claims under reexamination* are the same issue(s) that were raised or could have been raised by the requester in the litigation. Even if a final decision by the court that the requester has not sustained its burden of proving the invalidity of claim 19 is rendered, the patent owner has the burden of showing that *all* of the issues raised in the reexamination proceeding, as to each of the claims under reexamination, are the same issues that the requester raised or could have been raised in the litigation. The patent owner has not done so. Thus, item C has not been shown to have been satisfied.

Regarding item D, the requester, in its November 18, 2011 and January 9, 2012 opposition papers, states that the Chief Justice granted requester's application to extend the time to file a petition for writ of certiorari to December 23, 2011. However, while the record may show that the litigation has reached an advanced stage, there is no probability that the final outcome of the

---

[2] See generally MPEP 2686.04, subsection V.

[3] The patent owner is reminded that the patent owner has the burden of providing a sufficient showing of the above-listed factors, including whether the requester is a defendant to the litigation. Merely stating that the requester is a defendant in the litigation is insufficient. In the present case, the Office was able to verify patent owner's statement after brief review of the file of the reexamination proceeding. However, if more than a brief review is required to determine the above factors, then the showing of the patent owner will be determined to be insufficient.

litigation, even if it is adverse to the requester, would invoke the estoppel provisions of 35 U.S.C. 317(b) as to the non-litigated claims, because there would be no "final decision that the party has not sustained its burden of proving the invalidity" of the non-litigated claims. Thus, item D has not been shown to have been satisfied.

Office records do not reveal the existence of a co-pending *ex parte* reexamination proceeding for the patent under reexamination, which satisfies item E.

See also *Sony Computer Entertainment America, Inc. v. Dudas*, 85 USPQ2d 1594 (E.D. Va. 2006), where the court upheld the Office's determination of "good cause" to suspend two related *inter partes* reexamination proceedings. The facts of the present case are clearly distinguishable from *Sony*. Reexamination in *Sony* was limited to the claims that were being litigated. In the present case, however, the claims under reexamination differ from those in the copending litigation. Furthermore, in *Sony*, no action on the merits had been issued, while in the present case, an initial Office action on the merits has been mailed, after which responsive papers by both parties have already been filed. In other words, the patent owner has not shown that a final decision *as to all claims under reexamination* is expected in the near future, and the present proceeding has progressed on the merits. Without a final decision adverse to requester as to *all* claims under reexamination, no estoppel can attach as to all claims, to mandate termination of the present ordered reexamination proceeding. The fact that estoppel could possibly attach as to some of the claims at some uncertain point in the future, as argued by patent owner, does not provide the requisite showing of good cause for suspension.

In summary, the patent owner has not provided a showing of good cause to suspend prosecution of the present reexamination proceeding.

Accordingly, the November 8, 2011 patent owner petition to suspend the present *inter partes* reexamination proceeding is **dismissed**. Pursuant to MPEP 2686.04, the present *inter partes* reexamination proceeding **will continue**, and **will not be suspended**.

The parties are required to promptly inform the Office of the outcome of any petition for writ of certiorari filed with the Supreme Court, or the failure to timely file such a petition.

The February 9, 2012 Opposition Paper

The patent owner styles the February 9, 2012 opposition paper as a "request to strike and return third party requester's supplemental submission dated January 9, 2012". As an initial matter, any request to strike the paper of an opposing party[4] should be styled as a petition under 37 CFR

[4] The patent owner admits that "[t]his Supplemental Submission [by the requester] is largely a second response to [patent owner's] Petition to suspend the reexamination". The patent owner argues, however, that requester's supplemental submission "also includes comments directed to [patent owner's] response to the Office action". The comments referred to by the patent owner, however, comprise a total of three sentences, styled "Introduction", which appear to explain why the requester believes that it was precluded from having certain evidence and argument considered in the civil litigation, which may be relevant to the issue of whether the issues raised in the reexamination proceeding either were raised, or could have been raised, by the requester in the litigation. For this reason, requester's comments are considered to address issues that may be pertinent to patent owner's petition to suspend, and are properly styled as "supplemental" to its opposition to patent owner's petition.

1.181, which is not the case here. In any event, however, patent owner's February 9, 2012 paper directly rebuts the substantive arguments presented in requester's January 9, 2012 supplemental opposition paper, contrary to MPEP 2667, subsection I B, which provides, in pertinent part:

> Note that after an opposition to any patent owner petition is filed by a third party requester (regardless of whether such opposition has an entry right or not), any further paper in opposition/rebuttal/response to the third party opposition paper will not be considered and will be returned. There must be a limitation on party iterations of input, especially given the statutory mandate for special dispatch in reexamination.

For this reason, patent owner's February 9, 2012 opposition paper is **improper**, and will not be further considered on the merits. Because it has been scanned into the electronic Image File Wrapper (IFW), this paper cannot be physically returned to the sender. Thus, the February 9, 2012 opposition paper filed by the patent owner will be *sua sponte* **expunged** from the record by marking the papers "closed" and "non-public," and will not constitute part of the record of the present reexamination proceeding.

CONCLUSION

- The November 8, 2011 patent owner petition to suspend is **dismissed**.
- The present *inter partes* reexamination proceeding will continue, and **will not be suspended**.
- The February 9, 2012 opposition paper filed by the patent owner is an **improper paper**. Because this paper has been scanned into the electronic Image File Wrapper (IFW), this paper cannot be physically returned to the sender. Thus, the February 9, 2012 opposition paper filed by the patent owner will be *sua sponte* **expunged** from the record by marking the papers "closed" and "non-public," and will not constitute part of the record of the present reexamination proceeding.
- Telephone inquiries related to this decision should be directed to Cynthia L. Nessler, Senior Legal Advisor, at (571) 272-7724.

Brian E. Hanlon
Director
Office of Patent Legal Administration

UNITED STATES PATENT AND TRADEMARK OFFICE

UNITED STATES DEPARTMENT OF COMMERCE
United States Patent and Trademark Office
Address: COMMISSIONER FOR PATENTS
P.O. Box 1450
Alexandria, Virginia 22313-1450
www.uspto.gov

APPLICATION NO.	FILING DATE	FIRST NAMED INVENTOR	ATTORNEY DOCKET NO.	CONFIRMATION NO.
95/001,669	06/29/2011	7945498	498Q	6280

23508 7590 11/29/2011

LUNDEEN & LUNDEEN, PLLC
2710 Louisiana
HOUSTON, TX 77006

EXAMINER	
ART UNIT	PAPER NUMBER

DATE MAILED: 11/29/2011

Please find below and/or attached an Office communication concerning this application or proceeding.

UNITED STATES PATENT AND TRADEMARK OFFICE

UNITED STATES DEPARTMENT OF COMMERCE
United States Patent and Trademark Office
Address: COMMISSIONER FOR PATENTS
P.O. Box 1450
Alexandria, Virginia 22313-1450
www.uspto.gov

APPLICATION NO.	FILING DATE	FIRST NAMED INVENTOR	ATTORNEY DOCKET NO.	CONFIRMATION NO.
95/001,672	06/30/2011	7,945,498 B2	498E	9756

23508 7590 11/29/2011

LUNDEEN & LUNDEEN, PLLC
2710 Louisiana
HOUSTON, TX 77006

EXAMINER	
ART UNIT	PAPER NUMBER

DATE MAILED: 11/29/2011

Please find below and/or attached an Office communication concerning this application or proceeding.

UNITED STATES PATENT AND TRADEMARK OFFICE

Commissioner for Patents
United States Patents and Trademark Office
P.O.Box 1450
Alexandria, VA 22313-1450
www.uspto.gov

DO NOT USE IN PALM PRINTER

MAILED

Date: NOV 29 2011

CENTRAL REEXAMINATION UNIT

THIRD PARTY REQUESTER'S CORRESPONDENCE ADDRESS
COVINGTON & BURLING, LLP
ATTN: PATENT DOCKETING
1201 PENNSYLVANIA AVENUE, N.W.
WASHINGTON, D.C. 20004-2401

Transmittal of Communication to Third Party Requester
Inter Partes Reexamination

REEXAMINATION CONTROL NO. : 95001669
PATENT NO. : 7945498
TECHNOLOGY CENTER : 3999
ART UNIT : 3993

Enclosed is a copy of the latest communication from the United States Patent and Trademark Office in the above identified Reexamination proceeding. 37 CFR 1.903.

Prior to the filing of a Notice of Appeal, each time the patent owner responds to this communication, the third party requester of the inter partes reexamination may once file written comments within a period of 30 days from the date of service of the patent owner's response. This 30-day time period is statutory (35 U.S.C. 314(b)(2)), and, as such, it cannot be extended. See also 37 CFR 1.947.

If an ex parte reexamination has been merged with the inter partes reexamination, no responsive submission by any ex parte third party requester is permitted.

All correspondence relating to this inter partes reexamination proceeding should be directed to the Central Reexamination Unit at the mail, FAX, or hand-carry addresses given at the end of the communication enclosed with this transmittal.

UNITED STATES PATENT AND TRADEMARK OFFICE

Commissioner for Patents
United States Patents and Trademark Office
P.O.Box 1450
Alexandria, VA 22313-1450
www.uspto.gov

DO NOT USE IN PALM PRINTER

THIRD PARTY REQUESTER'S CORRESPONDENCE ADDRESS
PANITCH SCHWARZE BELISARIO & NADEL LLP
ONE COMMERCE SQUARE
2005 MARKET STREET, SUITE 2200
PHILADELPHIA, PA 19103

Date: MAILED
NOV 29 2011
CENTRAL REEXAMINATION UNIT

Transmittal of Communication to Third Party Requester
Inter Partes Reexamination

REEXAMINATION CONTROL NO. : 95001672
PATENT NO. : 7945498
TECHNOLOGY CENTER : 3999
ART UNIT : 3993

Enclosed is a copy of the latest communication from the United States Patent and Trademark Office in the above identified Reexamination proceeding. 37 CFR 1.903.

Prior to the filing of a Notice of Appeal, each time the patent owner responds to this communication, the third party requester of the inter partes reexamination may once file written comments within a period of 30 days from the date of service of the patent owner's response. This 30-day time period is statutory (35 U.S.C. 314(b)(2)), and, as such, it cannot be extended. See also 37 CFR 1.947.

If an ex parte reexamination has been merged with the inter partes reexamination, no responsive submission by any ex parte third party requester is permitted.

All correspondence relating to this inter partes reexamination proceeding should be directed to the Central Reexamination Unit at the mail, FAX, or hand-carry addresses given at the end of the communication enclosed with this transmittal.

UNITED STATES PATENT AND TRADEMARK OFFICE

Commissioner for Patents
United States Patent and Trademark Office
P.O. Box 1450
Alexandria, VA 22313-1450
www.uspto.gov

MAILED

NOV 29 2011

CENTRAL REEXAMINATION UI

Lundeen & Lundeen, PLLC
2710 Louisiana
Houston, Texas 77006

(For Patent Owner)

David L. Cavanaugh
Covington & Burling, LLP
Attn: Patent Docketing
1201 Pennsylvania Avenue, N.W.
Washington, D.C. 20004-2401

(For 95/001,669 Requester)

Panitch, Schwarze, Belisario,
& Nadel LLP
One Commerce Square
2005 Market Street, Suite 2200
Philadelphia, PA 19103

(For 95/001,672 Requester)

In re Giesler et al.
Inter Partes Reexamination Proceeding
Control No.: 95/001,669
Filed: June 29, 2011
For: U.S. Patent No. 7,945,498 B2

In re Giesler et al.
Inter Partes Reexamination Proceeding
Control No.: 95/001,672
Filed: June 30, 2011
For: U.S. Patent No. 7,945,498 B2

DECISION, *SUA SPONTE*, TO MERGE REEXAMINATION PROCEEDINGS

The above-captioned reexamination proceedings are before the Office of Patent Legal Administration for *sua sponte* consideration of whether the proceedings should be merged under 37 CFR 1.989.

BACKGROUND

1. U.S. Patent No. 7,945,498 B2 ("the '498 patent") issued to Giesler et al. on May 17, 2011, with claims 1-17.

2. A request for *inter partes* reexamination of claims 1-13, and 15 of the '498 patent was filed on June 29, 2011, by a third party requester, and was assigned control number 95/001,669 ("the '1669 *inter partes* proceeding"). The request identified Ariba Inc., Quadrem Netherlands, B.V., and Quadrem U.S., Inc. as the real parties in interest.

3. A second request for *inter partes* reexamination of claims 1-17 of the '498 patent was filed on June 30, 2011, by a second third party requester, and was assigned control number 95/001,672 ("the '1672 *inter partes* proceeding"). The request identified Elemica, Inc. as the real party in interest.

4. On August 19, 2011, *inter partes* reexamination was ordered for claims 1-13, and 15 of the '498 patent in the '1669 *inter partes* proceeding based on the examiner's determination that the June 29, 2011 request raised a substantial new question of patentability affecting these claims. The order was accompanied by a non-final Office action.

5. Also on August 19, 2011, *inter partes* reexamination was ordered for claims 1-17 of the '498 patent in the '1672 *inter partes* proceeding based on the examiner's determination that the June 30, 2011 request raised a substantial new question of patentability affecting these claims. The order was accompanied by a non-final Office action.

6. On October 19, 2011, patent owner submitted a response to the August 19, 2011 non-final action in the '1669 *inter partes* proceeding. The October 19, 2011 patent owner response did not include any amendment to the specification or claims.

7. Also on October 19, 2011, patent owner submitted a response to the August 19, 2011 non-final action in the '1672 *inter partes* proceeding. The October 19, 2011 patent owner response did not include any amendment to the specification or claims.

8. The time for providing comments expired on November 21, 2011, without any comments filed by either the '1669 *inter partes* requester or the '1672 *inter partes* requester.

DECISION

I. MERGER OF PROCEEDINGS

Reexamination has been ordered in two proceedings for overlapping claims of the same patent. Both proceedings are *inter partes* proceedings. Both proceedings are still pending, and have not been terminated. Therefore, consideration of merger pursuant to 37 CFR 1.989 is ripe at this point in time.

37 CFR 1.989 provides:

> (a) If any reexamination is ordered while a prior *inter partes* reexamination proceeding is pending for the same patent and prosecution in the prior *inter partes* reexamination proceeding has not been terminated, a decision may be made to merge the two proceedings or to suspend one of the two proceedings. Where merger is ordered, the merged examination will normally result in the issuance and publication of a single reexamination certificate under § 1.997.

In accordance with 37 CFR 1.989(a), the 95/001,669, and 95/001,672 proceedings are merged. The merged proceeding will be conducted in accordance with the guidelines and requirements that follow.

II. THE SAME CLAIMS MUST BE MAINTAINED IN BOTH PROCEEDINGS

Presently, the claims (and specification) are identical in both files. Patent owner is required to continue to maintain the same claims (and specification) in both files *throughout the merged proceeding.*

III. CONDUCT OF MERGED PROCEEDING

A. Governing regulations for the merged proceeding:

The present decision merges two *inter partes* reexamination proceedings. The merged proceeding is governed by 37 CFR 1.902 through 1.997. Pursuant to 37 CFR 1.989(a), the merged examination will normally result in the issuance and publication of a single reexamination certificate under 37 CFR 1.997.

It is noted that reexamination was ordered for claims 1-13, and 15 of the '498 patent in the '1669 proceeding and for claims 1-17 of the '498 patent in the '1672 proceeding. Accordingly, the examiner will conduct reexamination in the merged proceeding for claims 1-17 of the '498 patent.

B. *Inter partes* Third Party Requester Participation:

1. Comment rights:

Upon merger of proceedings, all *inter partes* requesters can comment pursuant to 35 U.S.C. 314(b)(2).[1] First, an *inter partes* requester's right to comment is contingent upon the patent owner responding to, or commenting on, an Office action. Second, an *inter partes* requester's right to comment is limited to issues raised in either the Office action or the patent owner's response to the action. Finally, the *inter partes* requester's comments must be submitted within 30 days from the date of service of the patent owner's response. No *inter partes* requester has a right to comment on any issue raised outside the confines of the statute, e.g. issues raised in a previous Office action (but not raised in the most recent Office action or response) or the request and comments from another requester. Requester comments must be submitted within the statutory time period of 30 days from date of service of patent owner's response.

---

[1] Each time that the patent owner files a response to an action on the merits from the United States Patent and Trademark Office ("Office"), the third-party requester shall have one opportunity to file written comments addressing issues raised by the action of the Office or the patent owner's response thereto, if those written comments are received by the Office within 30 days after the date of service of the patent owner's response.

2. Appeal Rights:

The *inter partes* reexamination procedures for taking appeal, and for participating in the patent owner's appeal, are explained in MPEP 2674 through 2675 and 2678 through 2683. As pointed out in MPEP 2674:

> A notice of appeal by a third party requester must identify each rejection *that was previously proposed* by *that third party requester* which the third party requester intends to contest. It is not sufficient to merely appeal from the allowance of a claim (i.e., the examiner's finding of a claim patentable); the third party requester must identify each previously proposed rejection to be contested.

Thus, each *inter partes* reexamination requester's appeal must **only** be taken from the finding(s) of patentability of claims in the RAN over rejections that the individual third party requester proposed in the request, and any that the individual third party requester properly added during the examination stage of the merged proceeding. Also, as provided by 37 CFR 41.67(c)(1)(vi):

> No new ground of *rejection* can be proposed by a third party requester appellant, unless such ground was withdrawn by the examiner during the prosecution of the proceeding, and the third party requester has not yet had an opportunity to propose it as a third party requester proposed ground of rejection.

Thus, the appellant's brief shall present a concise statement of each issue. And, no new ground of rejection (i.e., a ground that the individual requester did not propose) can be proposed by a third party requester appellant, unless that ground was withdrawn by the examiner during the prosecution of the proceeding, and the third party requester did not yet have an opportunity to propose it as a third party requester proposed ground of rejection.

It is to be noted that, because the '1669 *inter partes* third party requester did not propose any rejections of claims 14, 16, and 17 in its request for reexamination, the '1669 requester has no appeal rights as to those claims as they appear in the '498 patent.

C. Papers mailed/filed:

All papers mailed by the Office throughout the merged proceeding will take the form of a single action which applies to both proceedings. All papers issued by the Office, or filed by the patent owner and the third party requester(s), will contain the identifying data for both proceedings and will be entered in each reexamination file. All papers filed by the patent owner and the third party requester(s) must consist of a single paper, **filed in duplicate**, each bearing a signature and identifying data for both proceedings, for entry into each file.

All papers filed by the patent owner and the third party requester(s) should be directed:

by Mail to: Attn: Mail Stop "*Inter Partes* Reexam"
Central Reexamination Unit
Commissioner for Patents
P.O. Box 1450

Alexandria, VA 22313-1450

by FAX to: (571) 273-9900
Central Reexamination Unit

by Hand to: Customer Service Window
Attn: Central Reexamination Unit
Randolph Building, Lobby Level
401 Dulany Street
Alexandria, VA 22314

by EFS: Registered users may submit papers via the electronic filing system EFS-Web, at:

https://efs.uspto.gov/efile/myportal/efs-registered

Patent owner and requesters are reminded that every paper filed in the merged proceeding subsequent to this decision must be served on the other parties, and every paper filed must reflect that such paper was served on the other parties, pursuant to 37 CFR 1.903. All papers are to be addressed to the Central Reexamination Unit as provided above.

D. Amendments:

The filing of any amendments to the specification, claims, or drawings must comply with 37 CFR 1.943, which incorporates the provisions of 37 CFR 1.530 and the guidelines of MPEP § 2666.01, which in turn references the guidelines of MPEP § 2250.

37 CFR 1.121 does not apply to amendments in reexamination. Accordingly, clean copies of the amended claims are not required and are not to be submitted; rather amendments are to be presented via markings pursuant to 37 CFR 1.530(f), except that a claim should be canceled by a statement canceling the claim, without presentation of the text of the claim.

Pursuant to 37 CFR 1.530(i), all amendments must be made relative to the patent specification, including the claims, and drawings, which are in effect as of the date of filing the request for reexamination. *Amendments are not to be made relative to previous amendments.* Thus, for all amendments, all words not appearing in the patent are always underlined, and only words being deleted from the patent appear in brackets.

E. Fees:

Where a paper is filed which requires payment of a fee (e.g., extension of time fee, excess claims fee, petition fee, appeal fee, brief fee, oral hearing fee), only a single fee need be paid. For example, only one fee need be paid for patent owner's appellant brief (or that of one of the *inter partes* reexamination requesters) which may be filed, even though the brief relates to merged multiple proceedings, and copies must be filed (as pointed out above) for each file in the merged proceeding.

F. Citation of Patents and Printed Publications:

Upon return of the present merged proceeding to the examiner, the examiner will review the files to ensure that each file contains identical citations of prior patents and printed publications, and will cite such documents as are necessary as part of the next action in order to place the files in that condition.

G. Appeal Procedure Reminders for *Inter Partes* Reexamination

The parties are reminded of the procedures for taking appeal in an *inter partes* reexamination as explained in MPEP 2674 and 2675. The appeal must only be taken from (1) the rejection(s) of the claims in the Right of Appeal Notice (RAN) that the *patent owner* proposes to contest, or (2) the finding(s) of patentability of claims in the RAN that the *third party requester* proposes to contest. Therefore, in the notice of appeal, the patent owner must identify each claim rejected by examiner that the patent owner intends to contest. The third party requester must identify each rejection *that was previously proposed by that third party requester* that the third party requester intends to contest, and each rejection made and later withdrawn by the examiner that the third party requester intends to contest. No new ground of rejection (including one proposed by another requester, but not the appellant requester) can be proposed by a third party requester appellant, unless such ground was withdrawn by the examiner during the prosecution of the proceeding, and the third party requester has not yet had an opportunity to propose it as a third party requester proposed ground of rejection. See 37 CFR 41.67(c)(1)(vi) as to the proposed rejections that each individual requester can challenge in the appellant brief.

CONCLUSION

1. *Inter partes* Reexamination Control No. 95/001,669 and *inter partes* Reexamination Control No. 95/001,672 are merged into a single proceeding, to be conducted in accordance with the procedure set forth above.

2. The examiner will issue an Office action for the merged proceeding in due course.

3. Any questions concerning this communication should be directed to Susy Tsang-Foster in the Office of Patent Legal Administration, at (571) 272-7711.

Pinchus M. Laufer
Senior Legal Advisor
Office of Patent Legal Administration

November 23, 2011

UNITED STATES PATENT AND TRADEMARK OFFICE

UNITED STATES DEPARTMENT OF COMMERCE
United States Patent and Trademark Office
Address: COMMISSIONER FOR PATENTS
P.O. Box 1450
Alexandria, Virginia 22313-1450
www.uspto.gov

APPLICATION NO.	FILING DATE	FIRST NAMED INVENTOR	ATTORNEY DOCKET NO.	CONFIRMATION NO.
95/001,669	06/29/2011	7945498	498Q	6280

23508 7590 11/29/2011

LUNDEEN & LUNDEEN, PLLC
2710 Louisiana
HOUSTON, TX 77006

EXAMINER	
ART UNIT	PAPER NUMBER

DATE MAILED: 11/29/2011

Please find below and/or attached an Office communication concerning this application or proceeding.

Copied from 95001669 on 12/01/2011

UNITED STATES PATENT AND TRADEMARK OFFICE

UNITED STATES DEPARTMENT OF COMMERCE
United States Patent and Trademark Office
Address: COMMISSIONER FOR PATENTS
P.O. Box 1450
Alexandria, Virginia 22313-1450
www.uspto.gov

APPLICATION NO.	FILING DATE	FIRST NAMED INVENTOR	ATTORNEY DOCKET NO.	CONFIRMATION NO.
95/001,672	06/30/2011	7,945,498 B2	498E	9756

23508 7590 11/29/2011

LUNDEEN & LUNDEEN, PLLC
2710 Louisiana
HOUSTON, TX 77006

EXAMINER	
ART UNIT	PAPER NUMBER

DATE MAILED: 11/29/2011

Please find below and/or attached an Office communication concerning this application or proceeding.

Copied from 95001669 on 12/01/2011

UNITED STATES PATENT AND TRADEMARK OFFICE

Commissioner for Patents
United States Patents and Trademark Office
P.O.Box 1450
Alexandria, VA 22313-1450
www.uspto.gov

DO NOT USE IN PALM PRINTER

MAILED

Date: NOV 29 2011

CENTRAL REEXAMINATION UNIT

THIRD PARTY REQUESTER'S CORRESPONDENCE ADDRESS
COVINGTON & BURLING, LLP
ATTN: PATENT DOCKETING
1201 PENNSYLVANIA AVENUE, N.W.
WASHINGTON, D.C. 20004-2401

Transmittal of Communication to Third Party Requester
Inter Partes Reexamination

REEXAMINATION CONTROL NO. : 95001669
PATENT NO. : 7945498
TECHNOLOGY CENTER : 3999
ART UNIT : 3993

Enclosed is a copy of the latest communication from the United States Patent and Trademark Office in the above identified Reexamination proceeding. 37 CFR 1.903.

Prior to the filing of a Notice of Appeal, each time the patent owner responds to this communication, the third party requester of the inter partes reexamination may once file written comments within a period of 30 days from the date of service of the patent owner's response. This 30-day time period is statutory (35 U.S.C. 314(b)(2)), and, as such, it cannot be extended. See also 37 CFR 1.947.

If an ex parte reexamination has been merged with the inter partes reexamination, no responsive submission by any ex parte third party requester is permitted.

All correspondence relating to this inter partes reexamination proceeding should be directed to the Central Reexamination Unit at the mail, FAX, or hand-carry addresses given at the end of the communication enclosed with this transmittal.

PTOL-2070(Rev.07-04)

Copied from 95001669 on 12/01/2011

UNITED STATES PATENT AND TRADEMARK OFFICE

Commissioner for Patents
United States Patents and Trademark Office
P.O.Box 1450
Alexandria, VA 22313-1450
www.uspto.gov

DO NOT USE IN PALM PRINTER

THIRD PARTY REQUESTER'S CORRESPONDENCE ADDRESS
PANITCH SCHWARZE BELISARIO & NADEL LLP
ONE COMMERCE SQUARE
2005 MARKET STREET, SUITE 2200
PHILADELPHIA, PA 19103

Date: **MAILED**
NOV 29 2011
CENTRAL REEXAMINATION UNIT

Transmittal of Communication to Third Party Requester
Inter Partes Reexamination

REEXAMINATION CONTROL NO. : 95001672
PATENT NO. : 7945498
TECHNOLOGY CENTER : 3999
ART UNIT : 3993

Enclosed is a copy of the latest communication from the United States Patent and Trademark Office in the above identified Reexamination proceeding. 37 CFR 1.903.

Prior to the filing of a Notice of Appeal, each time the patent owner responds to this communication, the third party requester of the inter partes reexamination may once file written comments within a period of 30 days from the date of service of the patent owner's response. This 30-day time period is statutory (35 U.S.C. 314(b)(2)), and, as such, it cannot be extended. See also 37 CFR 1.947.

If an ex parte reexamination has been merged with the inter partes reexamination, no responsive submission by any ex parte third party requester is permitted.

All correspondence relating to this inter partes reexamination proceeding should be directed to the Central Reexamination Unit at the mail, FAX, or hand-carry addresses given at the end of the communication enclosed with this transmittal.

PTOL-2070(Rev.07-04)

Copied from 95001669 on 12/01/2011

UNITED STATES PATENT AND TRADEMARK OFFICE

Commissioner for Patents
United States Patent and Trademark Office
P.O. Box 1450
Alexandria, VA 22313-1450
www.uspto.gov

MAILED

NOV 29 2011

CENTRAL REEXAMINATION UI

Lundeen & Lundeen, PLLC (For Patent Owner)
2710 Louisiana
Houston, Texas 77006

David L. Cavanaugh (For 95/001,669 Requester)
Covington & Burling, LLP
Attn: Patent Docketing
1201 Pennsylvania Avenue, N.W.
Washington, D.C. 20004-2401

Panitch, Schwarze, Belisario, (For 95/001,672 Requester)
& Nadel LLP
One Commerce Square
2005 Market Street, Suite 2200
Philadelphia, PA 19103

In re Giesler et al.
Inter Partes Reexamination Proceeding
Control No.: 95/001,669
Filed: June 29, 2011
For: U.S. Patent No. 7,945,498 B2

In re Giesler et al.
Inter Partes Reexamination Proceeding
Control No.: 95/001,672
Filed: June 30, 2011
For: U.S. Patent No. 7,945,498 B2

DECISION, *SUA SPONTE*, TO MERGE REEXAMINATION PROCEEDINGS

The above-captioned reexamination proceedings are before the Office of Patent Legal Administration for *sua sponte* consideration of whether the proceedings should be merged under 37 CFR 1.989.

BACKGROUND

1. U.S. Patent No. 7,945,498 B2 ("the '498 patent") issued to Giesler et al. on May 17, 2011, with claims 1-17.

Copied from 95001669 on 12/01/2011

2. A request for *inter partes* reexamination of claims 1-13, and 15 of the '498 patent was filed on June 29, 2011, by a third party requester, and was assigned control number 95/001,669 ("the '1669 *inter partes* proceeding"). The request identified Ariba Inc., Quadrem Netherlands, B.V., and Quadrem U.S., Inc. as the real parties in interest.

3. A second request for *inter partes* reexamination of claims 1-17 of the '498 patent was filed on June 30, 2011, by a second third party requester, and was assigned control number 95/001,672 ("the '1672 *inter partes* proceeding"). The request identified Elemica, Inc. as the real party in interest.

4. On August 19, 2011, *inter partes* reexamination was ordered for claims 1-13, and 15 of the '498 patent in the '1669 *inter partes* proceeding based on the examiner's determination that the June 29, 2011 request raised a substantial new question of patentability affecting these claims. The order was accompanied by a non-final Office action.

5. Also on August 19, 2011, *inter partes* reexamination was ordered for claims 1-17 of the '498 patent in the '1672 *inter partes* proceeding based on the examiner's determination that the June 30, 2011 request raised a substantial new question of patentability affecting these claims. The order was accompanied by a non-final Office action.

6. On October 19, 2011, patent owner submitted a response to the August 19, 2011 non-final action in the '1669 *inter partes* proceeding. The October 19, 2011 patent owner response did not include any amendment to the specification or claims.

7. Also on October 19, 2011, patent owner submitted a response to the August 19, 2011 non-final action in the '1672 *inter partes* proceeding. The October 19, 2011 patent owner response did not include any amendment to the specification or claims.

8. The time for providing comments expired on November 21, 2011, without any comments filed by either the '1669 *inter partes* requester or the '1672 *inter partes* requester.

DECISION

I. MERGER OF PROCEEDINGS

Reexamination has been ordered in two proceedings for overlapping claims of the same patent. Both proceedings are *inter partes* proceedings. Both proceedings are still pending, and have not been terminated. Therefore, consideration of merger pursuant to 37 CFR 1.989 is ripe at this point in time.

37 CFR 1.989 provides:

> (a) If any reexamination is ordered while a prior *inter partes* reexamination proceeding is pending for the same patent and prosecution in the prior *inter partes* reexamination proceeding has not been terminated, a decision may be made to merge the two proceedings or to suspend one of the two proceedings. Where merger is ordered, the merged examination will normally result in the issuance and publication of a single reexamination certificate under § 1.997.

Copied from 95001669 on 12/01/2011

In accordance with 37 CFR 1.989(a), the 95/001,669, and 95/001,672 proceedings are merged. The merged proceeding will be conducted in accordance with the guidelines and requirements that follow.

II. THE SAME CLAIMS MUST BE MAINTAINED IN BOTH PROCEEDINGS

Presently, the claims (and specification) are identical in both files. Patent owner is required to continue to maintain the same claims (and specification) in both files *throughout the merged proceeding.*

III. CONDUCT OF MERGED PROCEEDING

A. Governing regulations for the merged proceeding:

The present decision merges two *inter partes* reexamination proceedings. The merged proceeding is governed by 37 CFR 1.902 through 1.997. Pursuant to 37 CFR 1.989(a), the merged examination will normally result in the issuance and publication of a single reexamination certificate under 37 CFR 1.997.

It is noted that reexamination was ordered for claims 1-13, and 15 of the '498 patent in the '1669 proceeding and for claims 1-17 of the '498 patent in the '1672 proceeding. Accordingly, the examiner will conduct reexamination in the merged proceeding for claims 1-17 of the '498 patent.

B. *Inter partes* Third Party Requester Participation:

1. Comment rights:

Upon merger of proceedings, all *inter partes* requesters can comment pursuant to 35 U.S.C. 314(b)(2).[1] First, an *inter partes* requester's right to comment is contingent upon the patent owner responding to, or commenting on, an Office action. Second, an *inter partes* requester's right to comment is limited to issues raised in either the Office action or the patent owner's response to the action. Finally, the *inter partes* requester's comments must be submitted within 30 days from the date of service of the patent owner's response. No *inter partes* requester has a right to comment on any issue raised outside the confines of the statute, e.g. issues raised in a previous Office action (but not raised in the most recent Office action or response) or the request and comments from another requester. Requester comments must be submitted within the statutory time period of 30 days from date of service of patent owner's response.

[1] Each time that the patent owner files a response to an action on the merits from the United States Patent and Trademark Office ("Office"), the third-party requester shall have one opportunity to file written comments addressing issues raised by the action of the Office or the patent owner's response thereto, if those written comments are received by the Office within 30 days after the date of service of the patent owner's response.

Copied from 95001669 on 12/01/2011

2. Appeal Rights:

The *inter partes* reexamination procedures for taking appeal, and for participating in the patent owner's appeal, are explained in MPEP 2674 through 2675 and 2678 through 2683. As pointed out in MPEP 2674:

> A notice of appeal by a third party requester must identify each rejection *that was previously proposed* by *that third party requester* which the third party requester intends to contest. It is not sufficient to merely appeal from the allowance of a claim (i.e., the examiner's finding of a claim patentable); the third party requester must identify each previously proposed rejection to be contested.

Thus, each *inter partes* reexamination requester's appeal must **only** be taken from the finding(s) of patentability of claims in the RAN over rejections that the individual third party requester proposed in the request, and any that the individual third party requester properly added during the examination stage of the merged proceeding. Also, as provided by 37 CFR 41.67(c)(1)(vi):

> No new ground of *rejection* can be proposed by a third party requester appellant, unless such ground was withdrawn by the examiner during the prosecution of the proceeding, and the third party requester has not yet had an opportunity to propose it as a third party requester proposed ground of rejection.

Thus, the appellant's brief shall present a concise statement of each issue. And, no new ground of rejection (i.e., a ground that the individual requester did not propose) can be proposed by a third party requester appellant, unless that ground was withdrawn by the examiner during the prosecution of the proceeding, and the third party requester did not yet have an opportunity to propose it as a third party requester proposed ground of rejection.

It is to be noted that, because the '1669 *inter partes* third party requester did not propose any rejections of claims 14, 16, and 17 in its request for reexamination, the '1669 requester has no appeal rights as to those claims as they appear in the '498 patent.

C. Papers mailed/filed:

All papers mailed by the Office throughout the merged proceeding will take the form of a single action which applies to both proceedings. All papers issued by the Office, or filed by the patent owner and the third party requester(s), will contain the identifying data for both proceedings and will be entered in each reexamination file. All papers filed by the patent owner and the third party requester(s) must consist of a single paper, **filed in duplicate**, each bearing a signature and identifying data for both proceedings, for entry into each file.

All papers filed by the patent owner and the third party requester(s) should be directed:

by Mail to: Attn: Mail Stop "*Inter Partes* Reexam"
Central Reexamination Unit
Commissioner for Patents
P.O. Box 1450

Copied from 95001669 on 12/01/2011

Alexandria, VA 22313-1450

by FAX to: (571) 273-9900
Central Reexamination Unit

by Hand to: Customer Service Window
Attn: Central Reexamination Unit
Randolph Building, Lobby Level
401 Dulany Street
Alexandria, VA 22314

by EFS: Registered users may submit papers via the electronic filing system EFS-Web, at:

https://efs.uspto.gov/efile/myportal/efs-registered

Patent owner and requesters are reminded that every paper filed in the merged proceeding subsequent to this decision must be served on the other parties, and every paper filed must reflect that such paper was served on the other parties, pursuant to 37 CFR 1.903. All papers are to be addressed to the Central Reexamination Unit as provided above.

D. Amendments:

The filing of any amendments to the specification, claims, or drawings must comply with 37 CFR 1.943, which incorporates the provisions of 37 CFR 1.530 and the guidelines of MPEP § 2666.01, which in turn references the guidelines of MPEP § 2250.

37 CFR 1.121 does not apply to amendments in reexamination. Accordingly, clean copies of the amended claims are not required and are not to be submitted; rather amendments are to be presented via markings pursuant to 37 CFR 1.530(f), except that a claim should be canceled by a statement canceling the claim, without presentation of the text of the claim.

Pursuant to 37 CFR 1.530(i), all amendments must be made relative to the patent specification, including the claims, and drawings, which are in effect as of the date of filing the request for reexamination. *Amendments are not to be made relative to previous amendments.* Thus, for all amendments, all words not appearing in the patent are always underlined, and only words being deleted from the patent appear in brackets.

E. Fees:

Where a paper is filed which requires payment of a fee (e.g., extension of time fee, excess claims fee, petition fee, appeal fee, brief fee, oral hearing fee), only a single fee need be paid. For example, only one fee need be paid for patent owner's appellant brief (or that of one of the *inter partes* reexamination requesters) which may be filed, even though the brief relates to merged multiple proceedings, and copies must be filed (as pointed out above) for each file in the merged proceeding.

Copied from 95001669 on 12/01/2011

F. Citation of Patents and Printed Publications:

Upon return of the present merged proceeding to the examiner, the examiner will review the files to ensure that each file contains identical citations of prior patents and printed publications, and will cite such documents as are necessary as part of the next action in order to place the files in that condition.

G. Appeal Procedure Reminders for *Inter Partes* Reexamination

The parties are reminded of the procedures for taking appeal in an *inter partes* reexamination as explained in MPEP 2674 and 2675. The appeal must only be taken from (1) the rejection(s) of the claims in the Right of Appeal Notice (RAN) that the *patent owner* proposes to contest, or (2) the finding(s) of patentability of claims in the RAN that the *third party requester* proposes to contest. Therefore, in the notice of appeal, the patent owner must identify each claim rejected by examiner that the patent owner intends to contest. The third party requester must identify each rejection *that was previously proposed by that third party requester* that the third party requester intends to contest, and each rejection made and later withdrawn by the examiner that the third party requester intends to contest. No new ground of rejection (including one proposed by another requester, but not the appellant requester) can be proposed by a third party requester appellant, unless such ground was withdrawn by the examiner during the prosecution of the proceeding, and the third party requester has not yet had an opportunity to propose it as a third party requester proposed ground of rejection. See 37 CFR 41.67(c)(1)(vi) as to the proposed rejections that each individual requester can challenge in the appellant brief.

CONCLUSION

1. *Inter partes* Reexamination Control No. 95/001,669 and *inter partes* Reexamination Control No. 95/001,672 are merged into a single proceeding, to be conducted in accordance with the procedure set forth above.

2. The examiner will issue an Office action for the merged proceeding in due course.

3. Any questions concerning this communication should be directed to Susy Tsang-Foster in the Office of Patent Legal Administration, at (571) 272-7711.

Pinchus M. Laufer
Senior Legal Advisor
Office of Patent Legal Administration

November 23, 2011

Copied from 95001669 on 12/01/2011

UNITED STATES PATENT AND TRADEMARK OFFICE

UNITED STATES DEPARTMENT OF COMMERCE
United States Patent and Trademark Office
Address: COMMISSIONER FOR PATENTS
P.O. Box 1450
Alexandria, Virginia 22313-1450
www.uspto.gov

APPLICATION NO.	FILING DATE	FIRST NAMED INVENTOR	ATTORNEY DOCKET NO.	CONFIRMATION NO.
95/001,672	06/30/2011	7,945,498 B2	498E	9756

23508 7590 11/29/2011

LUNDEEN & LUNDEEN, PLLC
2710 Louisiana
HOUSTON, TX 77006

EXAMINER	
ART UNIT	PAPER NUMBER

DATE MAILED: 11/29/2011

Please find below and/or attached an Office communication concerning this application or proceeding.

UNITED STATES PATENT AND TRADEMARK OFFICE

UNITED STATES DEPARTMENT OF COMMERCE
United States Patent and Trademark Office
Address: COMMISSIONER FOR PATENTS
P.O. Box 1450
Alexandria, Virginia 22313-1450
www.uspto.gov

APPLICATION NO.	FILING DATE	FIRST NAMED INVENTOR	ATTORNEY DOCKET NO.	CONFIRMATION NO.
95/001,669	06/29/2011	7945498	498Q	6280

23508 7590 11/29/2011

LUNDEEN & LUNDEEN, PLLC
2710 Louisiana
HOUSTON, TX 77006

EXAMINER	
ART UNIT	PAPER NUMBER

DATE MAILED: 11/29/2011

Please find below and/or attached an Office communication concerning this application or proceeding.

UNITED STATES PATENT AND TRADEMARK OFFICE

Commissioner for Patents
United States Patents and Trademark Office
P.O.Box 1450
Alexandria, VA 22313-1450
www.uspto.gov

DO NOT USE IN PALM PRINTER

MAILED

THIRD PARTY REQUESTER'S CORRESPONDENCE ADDRESS

COVINGTON & BURLING, LLP
ATTN: PATENT DOCKETING
1201 PENNSYLVANIA AVENUE, N.W.
WASHINGTON, D.C. 20004-2401

Date: NOV 29 2011

CENTRAL REEXAMINATION UNIT

Transmittal of Communication to Third Party Requester
Inter Partes Reexamination

REEXAMINATION CONTROL NO. : 95001669
PATENT NO. : 7945498
TECHNOLOGY CENTER : 3999
ART UNIT : 3993

Enclosed is a copy of the latest communication from the United States Patent and Trademark Office in the above identified Reexamination proceeding. 37 CFR 1.903.

Prior to the filing of a Notice of Appeal, each time the patent owner responds to this communication, the third party requester of the inter partes reexamination may once file written comments within a period of 30 days from the date of service of the patent owner's response. This 30-day time period is statutory (35 U.S.C. 314(b)(2)), and, as such, it cannot be extended. See also 37 CFR 1.947.

If an ex parte reexamination has been merged with the inter partes reexamination, no responsive submission by any ex parte third party requester is permitted.

All correspondence relating to this inter partes reexamination proceeding should be directed to the Central Reexamination Unit at the mail, FAX, or hand-carry addresses given at the end of the communication enclosed with this transmittal.

UNITED STATES PATENT AND TRADEMARK OFFICE

Commissioner for Patents
United States Patents and Trademark Office
P.O.Box 1450
Alexandria, VA 22313-1450
www.uspto.gov

DO NOT USE IN PALM PRINTER

THIRD PARTY REQUESTER'S CORRESPONDENCE ADDRESS
PANITCH SCHWARZE BELISARIO & NADEL LLP
ONE COMMERCE SQUARE
2005 MARKET STREET, SUITE 2200
PHILADELPHIA, PA 19103

Date: MAILED

NOV 29 2011

CENTRAL REEXAMINATION UNIT

Transmittal of Communication to Third Party Requester
Inter Partes Reexamination

REEXAMINATION CONTROL NO. : 95001672
PATENT NO. : 7945498
TECHNOLOGY CENTER : 3999
ART UNIT : 3993

Enclosed is a copy of the latest communication from the United States Patent and Trademark Office in the above identified Reexamination proceeding. 37 CFR 1.903.

Prior to the filing of a Notice of Appeal, each time the patent owner responds to this communication, the third party requester of the inter partes reexamination may once file written comments within a period of 30 days from the date of service of the patent owner's response. This 30-day time period is statutory (35 U.S.C. 314(b)(2)), and, as such, it cannot be extended. See also 37 CFR 1.947.

If an ex parte reexamination has been merged with the inter partes reexamination, no responsive submission by any ex parte third party requester is permitted.

All correspondence relating to this inter partes reexamination proceeding should be directed to the Central Reexamination Unit at the mail, FAX, or hand-carry addresses given at the end of the communication enclosed with this transmittal.

UNITED STATES PATENT AND TRADEMARK OFFICE

Commissioner for Patents
United States Patent and Trademark Office
P.O. Box 1450
Alexandria, VA 22313-1450
www.uspto.gov

MAILED

NOV 29 2011

CENTRAL REEXAMINATION UI

Lundeen & Lundeen, PLLC (For Patent Owner)
2710 Louisiana
Houston, Texas 77006

David L. Cavanaugh (For 95/001,669 Requester)
Covington & Burling, LLP
Attn: Patent Docketing
1201 Pennsylvania Avenue, N.W.
Washington, D.C. 20004-2401

Panitch, Schwarze, Belisario, (For 95/001,672 Requester)
& Nadel LLP
One Commerce Square
2005 Market Street, Suite 2200
Philadelphia, PA 19103

In re Giesler et al. :
Inter Partes Reexamination Proceeding :
Control No.: 95/001,669 :
Filed: June 29, 2011 :
For: U.S. Patent No. 7,945,498 B2 :
:
In re Giesler et al. : **DECISION, *SUA SPONTE*,**
Inter Partes Reexamination Proceeding : **TO MERGE**
Control No.: 95/001,672 : **REEXAMINATION**
Filed: June 30, 2011 : **PROCEEDINGS**
For: U.S. Patent No. 7,945,498 B2 :
:

The above-captioned reexamination proceedings are before the Office of Patent Legal Administration for *sua sponte* consideration of whether the proceedings should be merged under 37 CFR 1.989.

BACKGROUND

1. U.S. Patent No. 7,945,498 B2 ("the '498 patent") issued to Giesler et al. on May 17, 2011, with claims 1-17.

2. A request for *inter partes* reexamination of claims 1-13, and 15 of the '498 patent was filed on June 29, 2011, by a third party requester, and was assigned control number 95/001,669 ("the '1669 *inter partes* proceeding"). The request identified Ariba Inc., Quadrem Netherlands, B.V., and Quadrem U.S., Inc. as the real parties in interest.

3. A second request for *inter partes* reexamination of claims 1-17 of the '498 patent was filed on June 30, 2011, by a second third party requester, and was assigned control number 95/001,672 ("the '1672 *inter partes* proceeding"). The request identified Elemica, Inc. as the real party in interest.

4. On August 19, 2011, *inter partes* reexamination was ordered for claims 1-13, and 15 of the '498 patent in the '1669 *inter partes* proceeding based on the examiner's determination that the June 29, 2011 request raised a substantial new question of patentability affecting these claims. The order was accompanied by a non-final Office action.

5. Also on August 19, 2011, *inter partes* reexamination was ordered for claims 1-17 of the '498 patent in the '1672 *inter partes* proceeding based on the examiner's determination that the June 30, 2011 request raised a substantial new question of patentability affecting these claims. The order was accompanied by a non-final Office action.

6. On October 19, 2011, patent owner submitted a response to the August 19, 2011 non-final action in the '1669 *inter partes* proceeding. The October 19, 2011 patent owner response did not include any amendment to the specification or claims.

7. Also on October 19, 2011, patent owner submitted a response to the August 19, 2011 non-final action in the '1672 *inter partes* proceeding. The October 19, 2011 patent owner response did not include any amendment to the specification or claims.

8. The time for providing comments expired on November 21, 2011, without any comments filed by either the '1669 *inter partes* requester or the '1672 *inter partes* requester.

DECISION

I. MERGER OF PROCEEDINGS

Reexamination has been ordered in two proceedings for overlapping claims of the same patent. Both proceedings are *inter partes* proceedings. Both proceedings are still pending, and have not been terminated. Therefore, consideration of merger pursuant to 37 CFR 1.989 is ripe at this point in time.

37 CFR 1.989 provides:

> (a) If any reexamination is ordered while a prior *inter partes* reexamination proceeding is pending for the same patent and prosecution in the prior *inter partes* reexamination proceeding has not been terminated, a decision may be made to merge the two proceedings or to suspend one of the two proceedings. Where merger is ordered, the merged examination will normally result in the issuance and publication of a single reexamination certificate under § 1.997.

In accordance with 37 CFR 1.989(a), the 95/001,669, and 95/001,672 proceedings are merged. The merged proceeding will be conducted in accordance with the guidelines and requirements that follow.

II. THE SAME CLAIMS MUST BE MAINTAINED IN BOTH PROCEEDINGS

Presently, the claims (and specification) are identical in both files. Patent owner is required to continue to maintain the same claims (and specification) in both files *throughout the merged proceeding.*

III. CONDUCT OF MERGED PROCEEDING

A. Governing regulations for the merged proceeding:

The present decision merges two *inter partes* reexamination proceedings. The merged proceeding is governed by 37 CFR 1.902 through 1.997. Pursuant to 37 CFR 1.989(a), the merged examination will normally result in the issuance and publication of a single reexamination certificate under 37 CFR 1.997.

It is noted that reexamination was ordered for claims 1-13, and 15 of the '498 patent in the '1669 proceeding and for claims 1-17 of the '498 patent in the '1672 proceeding. Accordingly, the examiner will conduct reexamination in the merged proceeding for claims 1-17 of the '498 patent.

B. *Inter partes* Third Party Requester Participation:

1. Comment rights:

Upon merger of proceedings, all *inter partes* requesters can comment pursuant to 35 U.S.C. 314(b)(2).[1] First, an *inter partes* requester's right to comment is contingent upon the patent owner responding to, or commenting on, an Office action. Second, an *inter partes* requester's right to comment is limited to issues raised in either the Office action or the patent owner's response to the action. Finally, the *inter partes* requester's comments must be submitted within 30 days from the date of service of the patent owner's response. No *inter partes* requester has a right to comment on any issue raised outside the confines of the statute, e.g. issues raised in a previous Office action (but not raised in the most recent Office action or response) or the request and comments from another requester. Requester comments must be submitted within the statutory time period of 30 days from date of service of patent owner's response.

[1] Each time that the patent owner files a response to an action on the merits from the United States Patent and Trademark Office ("Office"), the third-party requester shall have one opportunity to file written comments addressing issues raised by the action of the Office or the patent owner's response thereto, if those written comments are received by the Office within 30 days after the date of service of the patent owner's response.

2. Appeal Rights:

The *inter partes* reexamination procedures for taking appeal, and for participating in the patent owner's appeal, are explained in MPEP 2674 through 2675 and 2678 through 2683. As pointed out in MPEP 2674:

> A notice of appeal by a third party requester must identify each rejection *that was previously proposed* by *that third party requester* which the third party requester intends to contest. It is not sufficient to merely appeal from the allowance of a claim (i.e., the examiner's finding of a claim patentable); the third party requester must identify each previously proposed rejection to be contested.

Thus, each *inter partes* reexamination requester's appeal must **only** be taken from the finding(s) of patentability of claims in the RAN over rejections that the individual third party requester proposed in the request, and any that the individual third party requester properly added during the examination stage of the merged proceeding. Also, as provided by 37 CFR 41.67(c)(1)(vi):

> No new ground of *rejection* can be proposed by a third party requester appellant, unless such ground was withdrawn by the examiner during the prosecution of the proceeding, and the third party requester has not yet had an opportunity to propose it as a third party requester proposed ground of rejection.

Thus, the appellant's brief shall present a concise statement of each issue. And, no new ground of rejection (i.e., a ground that the individual requester did not propose) can be proposed by a third party requester appellant, unless that ground was withdrawn by the examiner during the prosecution of the proceeding, and the third party requester did not yet have an opportunity to propose it as a third party requester proposed ground of rejection.

It is to be noted that, because the '1669 *inter partes* third party requester did not propose any rejections of claims 14, 16, and 17 in its request for reexamination, the '1669 requester has no appeal rights as to those claims as they appear in the '498 patent.

C. Papers mailed/filed:

All papers mailed by the Office throughout the merged proceeding will take the form of a single action which applies to both proceedings. All papers issued by the Office, or filed by the patent owner and the third party requester(s), will contain the identifying data for both proceedings and will be entered in each reexamination file. All papers filed by the patent owner and the third party requester(s) must consist of a single paper, **filed in duplicate**, each bearing a signature and identifying data for both proceedings, for entry into each file.

All papers filed by the patent owner and the third party requester(s) should be directed:

by Mail to: Attn: Mail Stop "*Inter Partes* Reexam"
Central Reexamination Unit
Commissioner for Patents
P.O. Box 1450

Alexandria, VA 22313-1450

by FAX to: (571) 273-9900
Central Reexamination Unit

by Hand to: Customer Service Window
Attn: Central Reexamination Unit
Randolph Building, Lobby Level
401 Dulany Street
Alexandria, VA 22314

by EFS: Registered users may submit papers via the electronic filing system EFS-Web, at:

https://efs.uspto.gov/efile/myportal/efs-registered

Patent owner and requesters are reminded that every paper filed in the merged proceeding subsequent to this decision must be served on the other parties, and every paper filed must reflect that such paper was served on the other parties, pursuant to 37 CFR 1.903. All papers are to be addressed to the Central Reexamination Unit as provided above.

D. Amendments:

The filing of any amendments to the specification, claims, or drawings must comply with 37 CFR 1.943, which incorporates the provisions of 37 CFR 1.530 and the guidelines of MPEP § 2666.01, which in turn references the guidelines of MPEP § 2250.

37 CFR 1.121 does not apply to amendments in reexamination. Accordingly, clean copies of the amended claims are not required and are not to be submitted; rather amendments are to be presented via markings pursuant to 37 CFR 1.530(f), except that a claim should be canceled by a statement canceling the claim, without presentation of the text of the claim.

Pursuant to 37 CFR 1.530(i), all amendments must be made relative to the patent specification, including the claims, and drawings, which are in effect as of the date of filing the request for reexamination. *Amendments are not to be made relative to previous amendments.* Thus, for all amendments, all words not appearing in the patent are always underlined, and only words being deleted from the patent appear in brackets.

E. Fees:

Where a paper is filed which requires payment of a fee (e.g., extension of time fee, excess claims fee, petition fee, appeal fee, brief fee, oral hearing fee), only a single fee need be paid. For example, only one fee need be paid for patent owner's appellant brief (or that of one of the *inter partes* reexamination requesters) which may be filed, even though the brief relates to merged multiple proceedings, and copies must be filed (as pointed out above) for each file in the merged proceeding.

F. Citation of Patents and Printed Publications:

Upon return of the present merged proceeding to the examiner, the examiner will review the files to ensure that each file contains identical citations of prior patents and printed publications, and will cite such documents as are necessary as part of the next action in order to place the files in that condition.

G. Appeal Procedure Reminders for *Inter Partes* Reexamination

The parties are reminded of the procedures for taking appeal in an *inter partes* reexamination as explained in MPEP 2674 and 2675. The appeal must only be taken from (1) the rejection(s) of the claims in the Right of Appeal Notice (RAN) that the *patent owner* proposes to contest, or (2) the finding(s) of patentability of claims in the RAN that the *third party requester* proposes to contest. Therefore, in the notice of appeal, the patent owner must identify each claim rejected by examiner that the patent owner intends to contest. The third party requester must identify each rejection *that was previously proposed by that third party requester* that the third party requester intends to contest, and each rejection made and later withdrawn by the examiner that the third party requester intends to contest. No new ground of rejection (including one proposed by another requester, but not the appellant requester) can be proposed by a third party requester appellant, unless such ground was withdrawn by the examiner during the prosecution of the proceeding, and the third party requester has not yet had an opportunity to propose it as a third party requester proposed ground of rejection. See 37 CFR 41.67(c)(1)(vi) as to the proposed rejections that each individual requester can challenge in the appellant brief.

CONCLUSION

1. *Inter partes* Reexamination Control No. 95/001,669 and *inter partes* Reexamination Control No. 95/001,672 are merged into a single proceeding, to be conducted in accordance with the procedure set forth above.

2. The examiner will issue an Office action for the merged proceeding in due course.

3. Any questions concerning this communication should be directed to Susy Tsang-Foster in the Office of Patent Legal Administration, at (571) 272-7711.

Pinchus M. Laufer
Senior Legal Advisor
Office of Patent Legal Administration

November 23, 2011

UNITED STATES PATENT AND TRADEMARK OFFICE

UNITED STATES DEPARTMENT OF COMMERCE
United States Patent and Trademark Office
Address: COMMISSIONER FOR PATENTS
P.O. Box 1450
Alexandria, Virginia 22313-1450
www.uspto.gov

APPLICATION NO.	FILING DATE	FIRST NAMED INVENTOR	ATTORNEY DOCKET NO.	CONFIRMATION NO.
95/001,679	07/08/2011	6502135	43614.92	9786

22852 7590 12/01/2011

FINNEGAN, HENDERSON, FARABOW, GARRETT & DUNNER LLP
901 NEW YORK AVENUE, NW
WASHINGTON, DC 20001-4413

EXAMINER	
ART UNIT	PAPER NUMBER

DATE MAILED: 12/01/2011

Please find below and/or attached an Office communication concerning this application or proceeding.

UNITED STATES PATENT AND TRADEMARK OFFICE

Commissioner for Patents
United States Patents and Trademark Office
P.O.Box 1450
Alexandria, VA 22313-1450
www.uspto.gov

DO NOT USE IN PALM PRINTER

THIRD PARTY REQUESTER'S CORRESPONDENCE ADDRESS
HAYNES AND BOONE, LLP
IP SECTION
2323 VICTORY AVENUE, SUITE 700
DALLAS, TX 75219

Date:

MAILED

DEC 0 1 2011

CENTRAL REEXAMINATION UNIT

Transmittal of Communication to Third Party Requester
Inter Partes Reexamination

REEXAMINATION CONTROL NO. : 95001679
PATENT NO. : 6502135
TECHNOLOGY CENTER : 3999
ART UNIT : 3992

Enclosed is a copy of the latest communication from the United States Patent and Trademark Office in the above identified Reexamination proceeding. 37 CFR 1.903.

Prior to the filing of a Notice of Appeal, each time the patent owner responds to this communication, the third party requester of the inter partes reexamination may once file written comments within a period of 30 days from the date of service of the patent owner's response. This 30-day time period is statutory (35 U.S.C. 314(b)(2)), and, as such, it cannot be extended. See also 37 CFR 1.947.

If an ex parte reexamination has been merged with the inter partes reexamination, no responsive submission by any ex parte third party requester is permitted.

All correspondence relating to this inter partes reexamination proceeding should be directed to the Central Reexamination Unit at the mail, FAX, or hand-carry addresses given at the end of the communication enclosed with this transmittal.

UNITED STATES PATENT AND TRADEMARK OFFICE

Commissioner for Patents
United States Patent and Trademark Office
P.O. Box 1450
Alexandria, VA 22313-1450
www.uspto.gov

Joseph E. Palys : (For Patent Owner)
FINNEGAN,HENDERSON,FARABOW, :
GARRETT & DUNNER LLP :
901 New York Avenue, N.W. :
Washington, D.C.. 20001-4413 :

MAILED

DEC 0 1 2011

CENTRAL REEXAMINATION UNIT

David L. McCombs :
HAYNES AND BOONE LLP : (For Third Party
2323 Victory Ave., Suite 700 : Requester)
Dallas, Texas 75219 :

In re: Munger et al. :
Inter Partes Reexamination Proceeding : DECISION ON PETITIONS
Control No.: 95/001,679 :
For: U.S. Patent No.: 6,502,135 :

This is a decision on two petitions filed by the patent owner: a petition filed on November 4th, 2011, entitled "PETITION TO VACATE *INTER PARTES* REEXAMINATION" [hereinafter "petition 1"], and a petition filed by Third Party Requestor on November 18th, 2011, entitled "PETITION IN OPPOSITION TO PATENT OWNER'S PETITION TO VACATE *INTER PARTES* REEXAMINATION" [hereinafter "petition 2"].

Petition 1 is treated as a petition under 37 CFR § 1.181. Petition 2 is treated also as a petition under 37 CFR § 1.181 as a submission in opposition to Petition 1.

The petitions are before the Director of the Central Reexamination Unit. The petition 1 is denied and petition 2 is dismissed as moot.

REVIEW OF RELEVANT FACTS

- U.S. Patent No. 6,502,135 issued on December 31st, 2002.

- A request for *inter partes* reexamination was filed on July 8th, 2011 and assigned control no. 95/001,679.

- *Inter partes* reexamination was ordered on October 3rd, 2011.
- Petition 1 was filed November 4th, 2011, and petition 2 was filed November 18th, 2011.

STATUTES, REGULATIONS, AND PATENT EXAMINING PROCEDURES

37 C.F.R. § 1.181 Petition to the Director

(a) Petition may be taken to the Director:
(1) From any action or requirement of any examiner in the ex parte prosecution of an application, or in ex parte or inter partes prosecution of a reexamination proceeding which is not subject to appeal to the Board of Patent Appeals and Interferences or to the court.

MPEP § 2646 (II) PETITION TO VACATE THE ORDER GRANTING REEXAMINATION

When a petition under 37 CFR 1.181 is filed to vacate a reexamination order, the third party requester may file a single submission in opposition to the petition.

DECISION

Patent owner ["petitioner"] argues in petition 1 that the Office vacate the proceedings because Office's order dated October 31st, 2011 is *ultra vires* as not based on prior art patents or printed publications. The petitioner further states that the Order failed to make an initial determination as to whether the Solana, Sedayao, Juels, Martin and Dalton references (or any of the other references) was a publicly available printed publication and because the Office's order is based on a reference not shown to be a printed publication.

The Third Party Requester ["petitioner"] argues in petition 2 that the Patent Owner's November 4th Petition (petition 1) is improper under MPEP § 2646(II) and further provides evidence to substantiate that Solana, Sedayao, Juels, Martin and Dalton references to be a patent or printed publication.

Petition 1

As a procedural matter, the petition was filed under 37 CFR § 1.181, which is reserved for action or requirement of any examiner in the ex parte prosecution of an application, or in ex parte or inter partes prosecution of a reexamination proceeding which is not subject to appeal to the Board of Patent Appeals and Interferences or to the court. However, the MPEP § 2646(II) "PETITION TO VACATE THE ORDER GRANTING REEXAMINATION" clearly states:

> "Where the examiner determines that a reference is a printed publication (i.e., that the criteria for publication has been satisfied), that determination is also **not** petitionable. These matters cannot be questioned with respect to vacating the order granting reexamination until a final agency decision on the reexamination proceeding has issued. Rather, these matters can be **argued** by the patent owner and **appealed** during the examination phase of the reexamination proceeding."

The Office considers petitions to vacate the order granting reexamination as not being properly filed under 37 CFR § 1.181. The petition is therefore **denied**.

Petition 2

Petitioner argues in petition 2 that Patent Owner's November 4th Petition (petition 1) is improper under MPEP § 2646(II) and further provides evidence to substantiate that Solana, Sedayao, Juels, Martin and Dalton references to be a patent or printed publication. In light of the Office's decision with regards to Petition 1 (see above), the petition 2 is **dismissed as moot**.

CONCLUSION

1. The petition filed November 4th, 2011 is denied and the petition filed November 18th, 2011 is dismissed as moot.

2. The most-recent Office action (Order) dated October 3rd, 2011, as listed in the statement of facts herein, remains outstanding and patent owner's response is due as set forth in that action.

3. Telephone inquiries related to this decision should be directed to Sudhanshu C. Pathak, Supervisory Patent Examiner, at (571) 272-5509 or in his absence to the undersigned at (571) 272-0700.

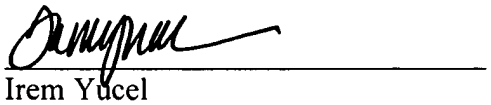

Irem Yücel
Director, Central Reexamination Unit

UNITED STATES PATENT AND TRADEMARK OFFICE

UNITED STATES DEPARTMENT OF COMMERCE
United States Patent and Trademark Office
Address: COMMISSIONER FOR PATENTS
P.O. Box 1450
Alexandria, Virginia 22313-1450
www.uspto.gov

APPLICATION NO.	FILING DATE	FIRST NAMED INVENTOR	ATTORNEY DOCKET NO.	CONFIRMATION NO.
95/001,680	07/08/2011	7804823	096933.000014	1267

20786 7590 09/08/2011

KING & SPALDING
1180 PEACHTREE STREET , NE
ATLANTA, GA 30309-3521

EXAMINER	
ART UNIT	PAPER NUMBER

DATE MAILED: 09/08/2011

Please find below and/or attached an Office communication concerning this application or proceeding.

UNITED STATES PATENT AND TRADEMARK OFFICE

Commissioner for Patents
United States Patents and Trademark Office
P.O.Box 1450
Alexandria, VA 22313-1450
www.uspto.gov

DO NOT USE IN PALM PRINTER

THIRD PARTY REQUESTER'S CORRESPONDENCE ADDRESS
BAKER & HOSTETLER LLP
WASHINGTON SQUARE, SUITE 1100
1050 CONNECTICUT AVE., N.W.
WASHINGTON, D.C. 20036-5304

Date:
MAILED
SEP 08 2011
CENTRAL REEXAMINATION UNIT

Transmittal of Communication to Third Party Requester
Inter Partes Reexamination

REEXAMINATION CONTROL NO. : 95001680
PATENT NO. : 7804823
TECHNOLOGY CENTER : 3999
ART UNIT : 3992

Enclosed is a copy of the latest communication from the United States Patent and Trademark Office in the above identified Reexamination proceeding. 37 CFR 1.903.

Prior to the filing of a Notice of Appeal, each time the patent owner responds to this communication, the third party requester of the inter partes reexamination may once file written comments within a period of 30 days from the date of service of the patent owner's response. This 30-day time period is statutory (35 U.S.C. 314(b)(2)), and, as such, it cannot be extended. See also 37 CFR 1.947.

If an ex parte reexamination has been merged with the inter partes reexamination, no responsive submission by any ex parte third party requester is permitted.

All correspondence relating to this inter partes reexamination proceeding should be directed to the Central Reexamination Unit at the mail, FAX, or hand-carry addresses given at the end of the communication enclosed with this transmittal.

ORDER GRANTING/DENYING REQUEST FOR* INTER PARTES *REEXAMINATION	**Control No.**	**Patent Under Reexamination**	
	95/001,680	7804823	
	Examiner	**Art Unit**	
	CHARLES CRAVER	3992	

-- The MAILING DATE of this communication appears on the cover sheet with the correspondence address. --

The request for *inter partes* reexamination has been considered. Identification of the claims, the references relied on, and the rationale supporting the determination are attached.

Attachment(s): ☐ PTO-892 ☒ PTO/SB/08 ☐ Other: _____

1. ☒ The request for *inter partes* reexamination is GRANTED.

☒ An Office action is attached with this order.

☐ An Office action will follow in due course.

2. ☐ The request for *inter partes* reexamination is DENIED.

This decision is not appealable. 35 U.S.C. 312(c). Requester may seek review of a denial by petition to the Director of the USPTO within ONE MONTH from the mailing date hereof. 37 CFR 1.927. EXTENSIONS OF TIME ONLY UNDER 37 CFR 1.183. In due course, a refund under 37 CFR 1.26(c) will be made to requester.

All correspondence relating to this *inter partes* reexamination proceeding should be directed to the **Central Reexamination Unit** at the mail, FAX, or hand-carry addresses given at the end of this Order.

Transmittal of Communication to Third Party Requester Inter Partes Reexamination	Control No.	Patent Under Reexamination	
	95/001,680	7804823	
	Examiner	Art Unit	
	CHARLES CRAVER	3992	

-- The MAILING DATE of this communication appears on the cover sheet with the correspondence address. --

Enclosed is a copy of the latest communication from the United States Patent and Trademark Office in the above-identified reexamination proceeding. 37 CFR 1.903.

Prior to the filing of a Notice of Appeal, each time the patent owner responds to this communication, the third party requester of the *inter partes* reexamination may once file written comments within a period of 30 days from the date of service of the patent owner's response. This 30-day time period is statutory (35 U.S.C. 314(b)(2)), and, as such, it cannot be extended. See also 37 CFR 1.947.

If an *ex parte* reexamination has been merged with the *inter partes* reexamination, no responsive submission by any *ex parte* third party requester is permitted.

All correspondence relating to this inter partes reexamination proceeding should be directed to the **Central Reexamination Unit** at the mail, FAX, or hand-carry addresses given at the end of the communication enclosed with this transmittal.

Decision on Request for Inter Partes Reexamination

I. Summary

A substantial new question of patentability (SNQ) is raised over claims 1-19 of US Pat 7,804,823 (hereinafter "the '823 Patent") based on a Request for Reexamination of claims 1-19 (all claims) of the '823 Patent filed 7/8/2011 (hereinafter "the Request) by the Third Party Requestor (hereinafter "the Requestor").

An Office action on the merits accompanies this order for *inter partes* reexamination.

Extentions of Time

Extensions of time under 37 CFR 1.136(a) will not be permitted in *inter partes* reexamination proceedings because the provisions of 37 CFR 1.136 apply only to "an applicant" and not to the patent owner in a reexamination proceeding. Additionally, 35 U.S.C. 314(c) requires that *inter partes* reexamination proceedings "will be conducted with special dispatch" (37 CFR 1.937). Patent owner extensions of time in *inter partes* reexamination proceedings are provided for in 37 CFR 1.956. Extensions of time are not available for third party requester comments, because a comment period of 30 days from service of patent owner's response is set by statute. 35 U.S.C. 314(b)(3).

Notification of Concurrent Proceedings

The Patent Owner is reminded of the continuing responsibility under 37 CFR 1.985 to apprise the Office of any litigation activity, or other prior or concurrent proceeding,

involving Patent No. 7,804,823 throughout the course of this reexamination proceeding. The third party requester is also reminded of the ability to similarly apprise the Office of any such activity or proceeding throughout the course of this reexamination proceeding. See MPEP § 2686 and 2686.04.

Service of Papers

Any paper filed by either the patent owner or the third party requester ***must be served*** on the other party in the reexamination proceeding in the manner provided by 37 CFR 1.248. See 37 CFR 1.903 and MPEP 2666.06.

II. Background

The instant Patent is currently assigned to Xpedite Systems, LLC. and issued 9/28/2010 based on US Pat Application Ser. No. 12/207,310, filed 9/9/2008 as a Continuation-in-Part of US Pat Application Ser. No. 11/825,315, filed 9/9/2007. The instant Patent is still enforceable.

The instant Patent under Reexamination is currently under litigation. See *Xpedite Systems, Llc v. J2 Global Communications, Inc,* U.S. District - Georgia Northern (Atlanta) 1:11cv706.

'823 Patent Background

The instant Patent discloses a system for translating communications for transmission to a remote device. FIG 1 is representative:

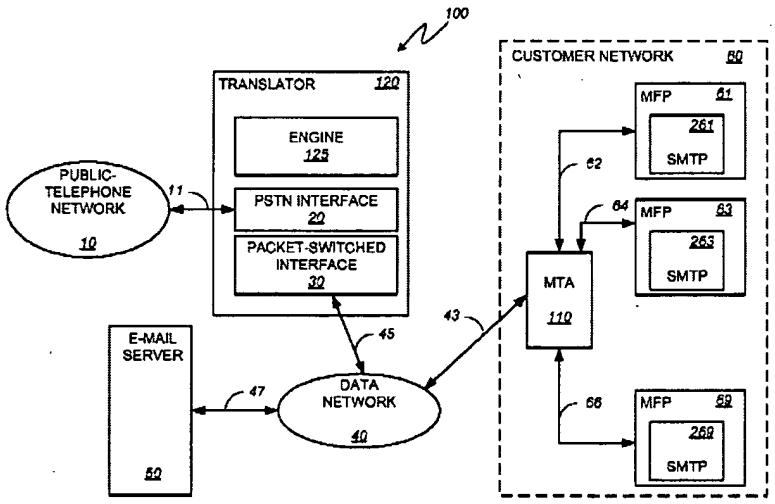

Col. 3 ll. 37-53 describes the invention generally:

> A multiple-function peripheral (MFP) coupled to a data network in an enterprise environment sends and receives fax messages absent fax modems and the PSTN. Fax messages are received at a fax server or translator. The translator converts and appends the received PSTN facsimile to an image format file as an e-mail message or extracts the image format file information and appends the same in an e-mail attachment. Both tagged image file format (TIFF) and portable document format (PDF) are supported. In an alternative embodiment, the received fax is converted into commands using a printer command language (PCL). The PCL commands are directed to the destination MFP, which generates a hard-copy representation of the fax in accordance with the commands. The e-mail message with the attached fax message is forwarded via one of two methods. The methods are selectable depending on user preference.

While col. 3 l. 54-col. 4 l. 21 describes the two basic methods that are selectable:

> The first method forwards the e-mail message from the translator to an e-mail server where the message is stored until application software operable on the destination MFP requests the stored e-mail message using an e-mail account assigned to the MFP. The application software receives the e-mail message with the attached fax, discards the e-mail message and prints the fax. In some embodiments, the MFP alerts a designated individual that a fax has been printed. Otherwise, the fax is available in the output bin for pickup and distribution to an addressee or for designated distribution.
>
> The second method uses an e-mail delivery agent within the translator to forward the e-mail message to a message transfer agent (MTA). The e-mail delivery agent uses the destination phone number extracted from the PSTN fax to identify a destination domain. The e-mail delivery agent performs a domain name system (DNS) lookup for information associated with the identified destination domain. A mail exchange (MX) record provided by a client of a fax service is used to identify a mail server for processing the message. The MTA relays the e-mail message in accordance with the client's internal DNS mechanism. In one embodiment, a specific device name is used. In other embodiments, a client specific (internal) IP address is used to route the e-mail message to an SMTP server in the designated MFP. When more than one mail exchange record is included with the e-mail message, the mail exchange records can be prioritized with a preference number that indicates the order in which the MFPs should be used. This enables the use of primary and backup MFPs for processing the fax. Again, the MFP receives the e-mail message with the attached fax, discards the e-mail message and prints the fax. As described above, the MFP can be configured to alert a designated individual that a fax is available at the MFP. The designated individual need not be an addressee listed on the fax.

FIG 8 shows the system of claim 10:

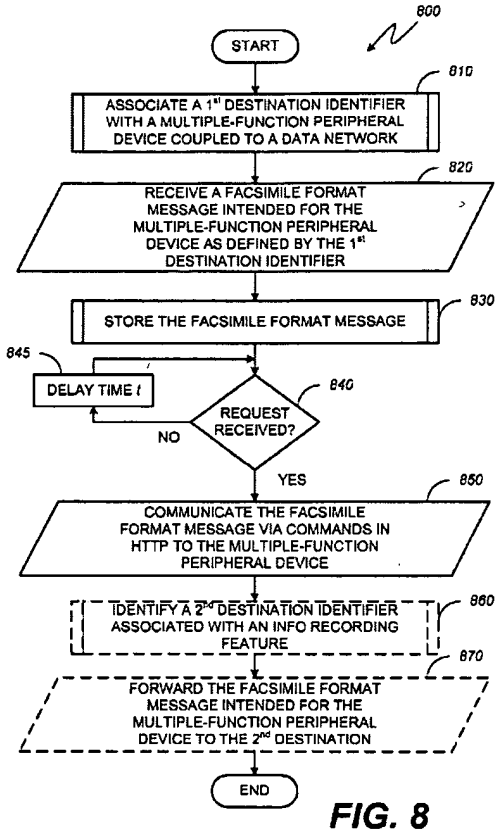

FIG. 8

...as well as col. 14 ll. 1-53, and FIG 9:

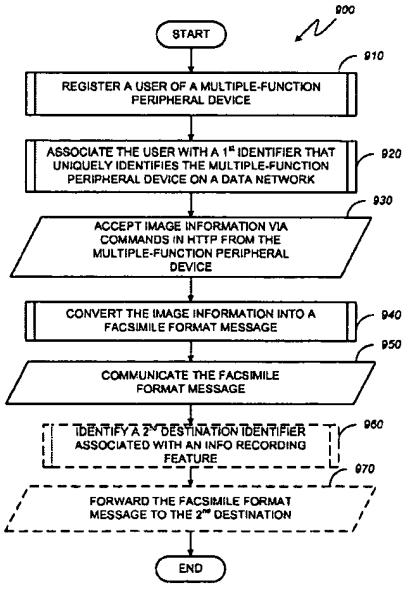

...and col. 14 l. 54-col. 15 l. 35 describes the system of claim 14.

The independent claims requested recite:

1. A multiple-function peripheral device, comprising:

a packet-switched network interface communicatively coupled to a translator via a data network; and

an autonomous application programming interface configured to periodically communicate with the translator to request image information in the form of stored facsimile format messages from a remote server via the packet-switched network interface in a first mode of operation.

10. A method for processing documents, comprising:

registering a user of a multiple-function peripheral device coupled to a data network by storing personal information of the user in a user profile and associating a first destination identifier with user information and a data network address that uniquely identifies the multiple-function peripheral device on the data network;

receiving a facsimile format message intended for the multiple-function peripheral device as defined by the first destination identifier;

storing the facsimile format message;

upon receipt of a request from the multiple-function peripheral device, communicating the facsimile format message via commands in hypertext transfer protocol when enabled in accordance a user preference stored in the user profile, identifying a second destination identifier associated with an information recording feature; and

forwarding the facsimile format message intended for the multiple-function device to the second destination which electronically stores, indexes and exposes the stored facsimile format message.

14. A method for processing documents, comprising:

registering a user of a multiple-function peripheral device by storing personal information of an operator of the multiple-function peripheral device in a register of a translator;

associating the user with a first identifier that uniquely identifies the multiple-function peripheral device on a data network;

accepting image information via commands in hypertext transfer protocol from the multiple-function peripheral device;

converting the image information into a facsimile format message; and

communicating the facsimile format message in accordance with a destination identifier entered via the multiple-function peripheral device.

The instant Patent was originally filed with claims 1-20. Following a Non-Final Rejection mailed 2/19/2010, which rejected:

Claims 10 and 15 as being anticipated by Nishida,

Claims 1, 2, 5-7 and 9 as being obvious over Nishida in view of Asfhar,

Claims 3, 4 and 17 as obvious over Nishida in view of Asfhar and further in view of Minami,

Claim 8 as being obvious over Nishida in view of Asfhar and further in view of Thompson,

Claims 11, 19 and 20 as being obvious over Nishida further in view of Tsuchiya.

Claim 12 as being obvious over Nishida further in view of Evevsky,

Claims 13 and 18 as being obvious over Nishida further in view of Makipaa,

Claim 14 as being obvious over Nishida further in view of Ferlitsch,

Claim 16 as being obvious over Nishida further in view of Takahashi,

Patent Owner filed an amendment to the claims on 5/19/2010, which amended claims 1, 5, 6, 10 and 15 and canceled claim 11. Claims 1, 10 and 15 were amended as follows:

1. A multiple-function peripheral device, comprising:

a packet-switched network interface communicatively coupled to a translator via a data network; and

an autonomous application programming interface configured to periodically communicate with the translator to request image information in the form of stored facsimile format messages from a remote server via the packet-switched network interface in a first mode of operation.

10. A method for processing documents, comprising:

associating a first destination identifier with a multiple-function peripheral device coupled to a data network;

receiving a facsimile format message intended for the multiple-function peripheral device as defined by the first destination identifier;

storing the facsimile format message; and

upon receipt of a request from the multiple-function peripheral device, communicating the facsimile format message via commands in hypertext transfer protocol[;]

identifying a second destination identifier associated with an information recording feature; and

forwarding the facsimile format message intended for the multiple-function device to the second destination which electronically stores, indexes and exposes the stored facsimile format message.

15. A method for processing documents, comprising:

registering a user of a multiple-function peripheral device by storing personal information of an operator of the multiple-function peripheral device in a register of a translator;

associating the user with a first identifier that uniquely identifies the multiple- function peripheral device on a data network;

accepting image information via commands in hypertext transfer protocol from the multiple-function peripheral device;

converting the image information into a facsimile format message; and

communicating the facsimile format message in accordance with a destination identifier entered via the multiple-function peripheral device.

The Application was allowed 7/28/2010 including an Examiner's Amendment to claim 10 as follows:

10. A method for processing documents, comprising:

registering a user of a multiple-function peripheral device coupled to a data network by storing personal information of the user in a user profile and associating a first destination identifier with user information and a data network address that uniquely identifies ~~a~~ the multiple-function peripheral device ~~coupled to a~~ on the data network;

receiving a facsimile format message intended for the multiple-function peripheral device as defined by the first destination identifier;

storing the facsimile format message; ~~and~~

upon receipt of a request from the multiple-function peripheral device, communicating the facsimile format message via commands in hypertext transfer protocol[;]

when enabled in accordance a user preference stored in the user profile, identifying a second destination identifier associated with an information recording feature; and

> forwarding the facsimile format message intended for the multiple-function device to the second destination which electronically stores, indexes and exposes the stored facsimile format message.

Notice of Allowability, pp. 2-3. No reasons for allowability were provided by the Examiner. However, in his amendment of 5/19/2010, Patent Owner stated as to claims 1, 10 and 15 (which issued as claim 14):

> *(Claim 1): ...Nishida* fails entirely to disclose, teach or suggest an autonomous application programming interface operating on a multiple-function peripheral device that periodically communicates with a translator to request image information in the form of stored facsimile format messages from a remote server.
>
> In contrast with Applicants' claimed multiple-function peripheral device which includes an autonomous application programming interface, *Nishida* discloses an Internet-based facsimile (IFAX) device that queries an email server and if email is present in an appropriately addressed email box, the IFAX delivers the email.
>
> The mention in Asfhar of a gateway that converts an incoming voice/fax/multimedia call into packets suitable for transmission over an IP network fails to remedy the deficiency of Nishida...
>
> *(Claim 10): ...Nishida* does not disclose, teach or suggest the at least the claimed step of forwarding the facsimile format message intended for the multiple-function device to the second destination which electronically stores, indexes and exposes the stored facsimile format message. .
>
> *(Claim 15): ...Nishida,* do[es] not disclose, teach or suggest Applicants' claimed step of "registering a user of a multiple-function peripheral device by storing personal information of an operator of the multiple-function peripheral device in a register of a translator."

Amendment of 5/19/2010 pp. 7-10 (emphasis added).

These statements, as well as arguments below, are of note when it comes to determining whether an instant reference is cumulative to the record as well as determining priority of the instant claims.

III. Request

Substantial New Question of Patentability

For "a substantial new question of patentability"' (SNQ) to be present, it is only necessary that:

A. The prior art patents and or printed publications raise a substantial question of patentability regarding at least one claim, i.e., the teaching of the prior art patents and printed publications is such that a reasonable examiner would consider the teaching to be important in deciding whether or not the claim is patentable; it is not necessary that the prior art establish a prima facie case of unpatentability; and

B. The same question of patentability as to the claim has not been decided by the Office in a previous examination or pending reexamination of the patent or in a final holding of invalidity by the Federal Courts in a decision on the merits involving the claim.

For any reexamination ordered on or after November 2, 2002, reliance on previously cited/considered art, i.e., "old art," does not necessarily preclude the existence of a substantial new question of patentability (SNQ) that is based exclusively on that old art. Rather, determinations on whether a SNQ exists in such an instance shall be based upon a fact-specific inquiry done on a case-by-case basis. See MPEP 2642.

The Request of 7/8/2011 indicates that the Requestor considers the following prior art:

Exhibit F: US Pat 7,904,811 to Saito;

Exhibit G: US Pat Pub 2006/0291453 to Kuwahara;

Exhibit H: US Pat Pub 2005/0134903 to Tanimoto;

To apply to the claims as follows:

SNQ 1: Claims 1-19 are asserted anticipated under 35 USC § 102(b) by Saito.

SNQ 2: Claims 1-19 are asserted anticipated under 35 USC § 102(b) by Kuwahara.

SNQ 3: Claims 1-19 are asserted anticipated under 35 USC § 102(b) by Tanimoto.

CLAIM INTERPRETATION:

On pp. 10-11 of the Request, Requestor asserts that a number of limitations in the independent claims are non-limiting and should be ignored by the Examiner.

> As demonstrated above, the only limitations that distinguish[] the '823 patent from the prior art are the "translator" and "forwarding the facsimile ... to the second destination" limitations. Therefore, the remaining limitations in the claims of the '823 patent are non-limiting.

Request at 10.

The Examiner notes that the portions of this argument applying to anticipation are dealt with in the First Action which accompanies this Order.

However, it is further noted that Requestor further asserts on p. 11 of the Request that, according to his above argument,

> ...the Petitioner of this Reexamination respectfully submit[s] that the '823 patent is anticipated under 35 U.S.C. 102 over the above-mentioned prior art, nonwithstanding the fact that the prior-art does not read on the non-limiting elements of the claims, such as the "transmit a facsimile of the generated form" element.

First, the Examiner is unable to determine to which prior art references the Requestor is referring as he does not specify them, i.e. the previous prior art in the original prosecution or the new references he is asserting against the claims in this proceeding. In part because of the above, as well as the vague nature of this conclusory statement, assuming such statement is intended as an assertion of a substantial new question of patentability over earlier-cited references, such is not being considered an assertion of any SNQ before the Office as no question of patentability is actually asserted. See MPEP 2616 for a specific discussion of the proper form and content of a Request for Inter Partes Reexamination with respect to the statement asserting a substantial new question of patentability towards the claims, as well as MPEP 2617 for a discussion of the form and content of a statement in the request applying prior art.

REFERENCES:

Saito:

Saito teaches a system wherein a multifunction copy machine, connected via a data network, may manage, translate and forward documents to other devices on the network. FIG 2 is representative:

FIG.2

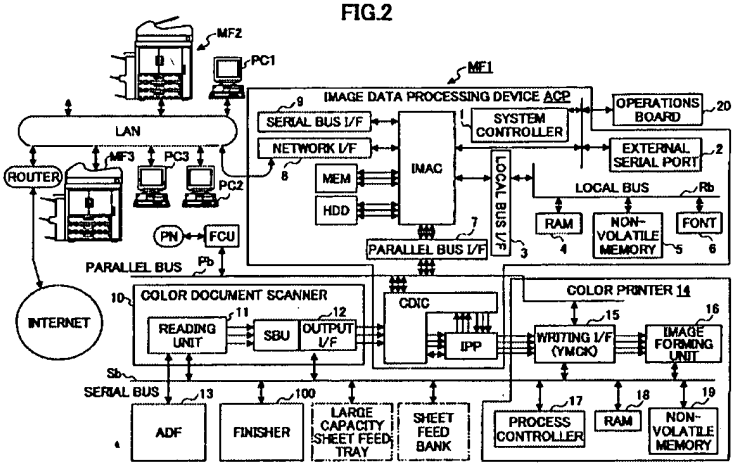

The LAN shown is read as a packet-switched network, as is the Internet connection shown. Saito further discloses using programming that converts images to various formats, stores data and allows images to be forwarded to remote user devices (via the Internet) in varying formats. Col. 5 l. 30-col. 6 l. 5 describes the device and system in general, and col. 7 ll. 13-41 discloses specifics about facsimile images.

Kuwahara:

Kuwahara teaches a facsimile server system which may be accessed via a request through a hypertext protocol (HTTP). FIG 2 is representative of the multifunction printer at the center of the invention:

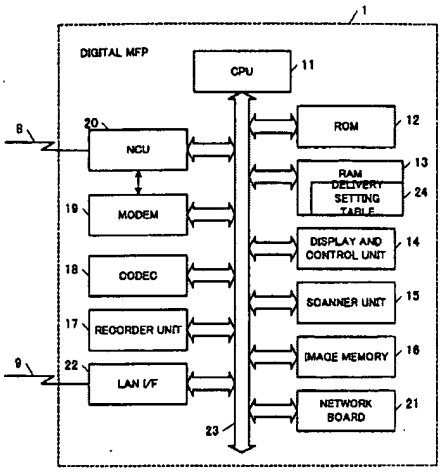

MFP 1 utilizes programming (PARA 0036) to retrieve and translate stored images (PARAS 0037-0041) for transmission to users in response to requests (PARAS 0050-0052).

Tanimoto:

Tanimoto teaches a system connecting a communication device to a facsimile system via a network. FIGS 1 and 10 are representative:

FIG. 1

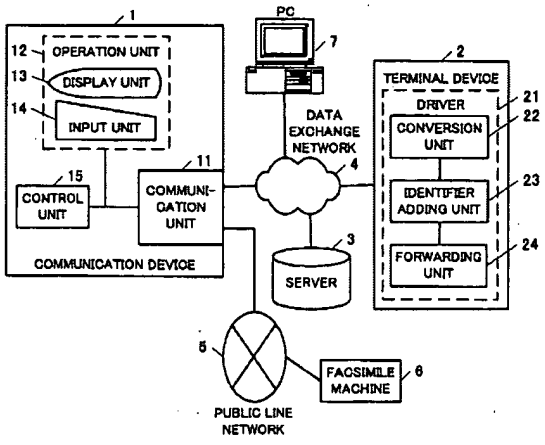

FIG. 10

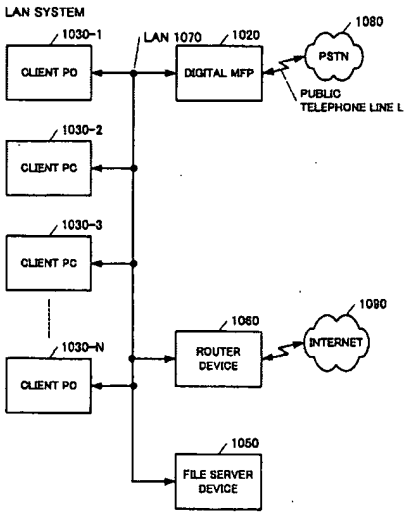

A Digital Multifunction Printer MFP (e.g. 1020) is connected via a packet-switched network (LAN) to client PCs so as to execute programming allowing the client PCs access to copy, printing and facsimile functions of the MFP, including the copying and conversion of document images to other formats (PARAS 0100-0101).

IV. SNQs Raised by the Prior Art

SNQ 1: Claims 1-19 are asserted anticipated under 35 USC § 102(b) by Saito.

It is agreed that Saito raises a substantial new question of patentability with regards to claims 1-19 of the '823 Patent.

As shown by the Requestor in pp. 12-23 of the Request, Saito discloses a system for storing and translating images for transmission and discloses facsimile images.

A reasonable examiner would have found such references important in a finding of patentability over said claims and thus said references raise a substantial new question of patentability over claims 1-19 of the '823 Patent which question has not been decided in a previous examination of the Patent, nor considered in a final holding of invalidity by Federal Court.

SNQ 2: Claims 1-19 are asserted anticipated under 35 USC § 102(b) by Kuwahara.

It is agreed that Kuwahara raises a substantial new question of patentability with regards to claims 1-19 of the '823 Patent.

As shown by the Requestor in pp. 23-37 of the Request, Kuwahara discloses a system that stores and translates image information for transmission to end users.

A reasonable examiner would have found such references important in a finding of patentability over said claims and thus said references raise a substantial new question

of patentability over claims 1-19 of the '823 Patent which question has not been decided in a previous examination of the Patent, nor considered in a final holding of invalidity by Federal Court.

SNQ 3: Claims 1-19 are asserted anticipated under 35 USC § 102(b) by Tanimoto.

It is agreed that Tanimoto raises a substantial new question of patentability with regards to claims 1-19 of the '823 Patent.

As shown by the Requestor in pp. 37-49 of the Request, Tanimoto discloses a system allowing client PCs to use a connected MFP to copy and translate and transfer images.

A reasonable examiner would have found such references important in a finding of patentability over said claims and thus said references raise a substantial new question of patentability over claims 1-19 of the '823 Patent which question has not been decided in a previous examination of the Patent, nor considered in a final holding of invalidity by Federal Court.

V. Conclusion

For the reasons set forth above, references cited by the Requestor raise a substantial new question of patentability with respect to claims 1-19 of the '823 Patent. Claims 1-19 will be reexamined in response to the Request.

Notice Re Patent Owner's Correspondence Address

Effective May 16, 2007, 37 CFR 1.33(c) has been revised to provide that:

The patent owner's correspondence address for all communications in an *ex parte* reexamination or an *inter partes* reexamination is designated as the correspondence address of the patent. See *Revisions and Technical Corrections Affecting Requirements for Ex Parte and Inter Partes Reexamination*, 72 FR 18892 (April 16, 2007) (Final Rule).

The correspondence address for any pending reexamination proceeding not having the same correspondence address as that of the patent is, by way of this revision to 37 CFR 1.33(c), automatically changed to that of the patent file as of the effective date.

This change is effective for any reexamination proceeding which is pending before the Office as of May 16, 2007, including the present reexamination proceeding, and to any reexamination proceeding which is filed after that date.

Parties are to take this change into account when filing papers, and direct communications accordingly.

All correspondence relating to this *inter partes* reexamination proceeding should be directed:

By Mail to: Mail Stop *Inter Partes* Reexam
Attn: Central Reexamination Unit
Commissioner for Patents
United States Patent & Trademark Office
P.O. Box 1450
Alexandria, VA 22313-1450

By FAX to: (571) 273-9900
Central Reexamination Unit

By hand: Customer Service Window
Randolph Building
401 Dulany Street
Alexandria, VA 22314

Registered users of EFS-Web may alternatively submit such correspondence via the electronic filing system EFS-Web, at https://sportal.uspto.gov/authenticate/authenticateuserlocalepf.html. EFS-Web offers the benefit of quick submission to the particular area of the Office that needs to act on the correspondence. Also, EFS-Web submissions are "soft scanned" (i.e., electronically uploaded) directly into the official file for the reexamination proceeding, which offers parties the opportunity to review the content of their submissions after the "soft scanning" process is complete.

Any inquiry concerning this communication or earlier communications from the examiner, or as to the status of this proceeding, should be directed to the Central Reexamination Unit at telephone number (571) 272-7705.

Signed:

/Charles Craver/
Charles Craver
Primary Examiner
Central Reexamination Unit 3992

Conferees:

/A. J. G./
Examiner, Art Unit 3992

/Alexander Kalinowski/
Supervisory Patent Examiner, Art Unit 3691

UNITED STATES PATENT AND TRADEMARK OFFICE

UNITED STATES DEPARTMENT OF COMMERCE
United States Patent and Trademark Office
Address: COMMISSIONER FOR PATENTS
P.O. Box 1450
Alexandria, Virginia 22313-1450
www.uspto.gov

APPLICATION NO.	FILING DATE	FIRST NAMED INVENTOR	ATTORNEY DOCKET NO.	CONFIRMATION NO.
95/001,682	07/11/2011	6,502,135	41484-80120	1074

23630 7590 02/01/2012

McDermott Will & Emery
600 13th Street, NW
Washington, DC 20005-3096

EXAMINER	
ART UNIT	PAPER NUMBER

DATE MAILED: 02/01/2012

Please find below and/or attached an Office communication concerning this application or proceeding.

Copied from 95001852 on 02/01/2012

UNITED STATES PATENT AND TRADEMARK OFFICE

Commissioner for Patents
United States Patents and Trademark Office
P.O.Box 1450
Alexandria, VA 22313-1450
www.uspto.gov

DO NOT USE IN PALM PRINTER

THIRD PARTY REQUESTER'S CORRESPONDENCE ADDRESS

SIDLEY AUSTIN LLP
717 NORTH HARWOOD
SUITE 3400
DALLAS, TX 75201

Date: 2-1-12

Transmittal of Communication to Third Party Requester
Inter Partes Reexamination

REEXAMINATION CONTROL NO. : 95001682
PATENT NO. : 6502135
TECHNOLOGY CENTER : 3999
ART UNIT : 3992

Enclosed is a copy of the latest communication from the United States Patent and Trademark Office in the above identified Reexamination proceeding. 37 CFR 1.903.

Prior to the filing of a Notice of Appeal, each time the patent owner responds to this communication, the third party requester of the inter partes reexamination may once file written comments within a period of 30 days from the date of service of the patent owner's response. This 30-day time period is statutory (35 U.S.C. 314(b)(2)), and, as such, it cannot be extended. See also 37 CFR 1.947.

If an ex parte reexamination has been merged with the inter partes reexamination, no responsive submission by any ex parte third party requester is permitted.

All correspondence relating to this inter partes reexamination proceeding should be directed to the Central Reexamination Unit at the mail, FAX, or hand-carry addresses given at the end of the communication enclosed with this transmittal.

PTOL-2070(Rev.07-04)

Copied from 95001852 on 02/01/2012

UNITED STATES PATENT AND TRADEMARK OFFICE

Commissioner for Patents
United States Patent and Trademark Office
P.O. Box 1450
Alexandria, VA 22313-1450
www.uspto.gov

McDermott Will & Emery : (For Patent Owner)
600 13th Street, NW :
Washington, DC 20005 :

SIDLEY AUSTIN LLP : (For Third Party
717 NORTH HARWOOD : Requester)
SUITE 3400 :
DALLAS, TX 75201 :

In re: Munger *et al.* :
Inter Partes Reexamination Proceeding : DECISION ON PETITION
Control No.: 95/001,682 : UNDER 37 CFR § 1.181
Deposited: July 11, 2011 :
For: U.S. Patent No.: 6,502,135 :

This is a decision on a petition filed by the patent owner on November 7, 2011 entitled "PETITION TO VACATE *INTER PARTES* REEXAMINATION" and is a request to the Director to exercise his discretion pursuant to 37 CFR § 1.181 to vacate the October 3, 2011 Order Granting Request for *Inter Partes* Reexamination.

The petition is before the Director of the Central Reexamination Unit. Also before the Director is the opposition filed by the third party requester on November 21, 2011.

The petition under 37 CFR § 1.181 is dismissed.

Copied from 95001852 on 02/01/2012

REVIEW OF RELEVANT FACTS

- U.S. Patent No. 6,502,135 issued on December 31, 2002.
- A request for *inter partes* reexamination was filed July 11, 2011 and assigned control number 95/001,682.
- Reexamination was ordered in a decision mailed October 3, 2011. Among other things, the examiner found that the Bingo reference raised a substantial new question of patentability as to claims 1-17, either alone or combined with other references. The examiner did not explicitly find that Bingo was a printed publication.
- On November 7, 2011, patent owner filed the instant petition.
- On November 21, 2011, the third party requester filed an opposition as permitted by MPEP § 2646(II).

STATUTES, REGULATIONS, AND PATENT EXAMINING PROCEDURES

MPEP § 2646 Decision Ordering Reexamination

II. PETITION TO VACATE THE ORDER GRANTING REEXAMINATION (in part):

A substantive determination by the Director of the Office to institute reexamination pursuant to a finding that the prior art patents or printed publications raise a substantial new question of patentability is not subject to review by petition or otherwise. *See Joy Mfg. Co. v. Nat'l Mine Serv. Co., Inc.*, 810 F.2d 1127, 1 USPQ2d 1627 (Fed. Cir. 1987); *Heinl v. Godici*, 143 F.Supp. 2d 593 (E.D. Va. 2001). Note further the decision of *Patlex Corp. v. Quigg*, 680 F.Supp. 33, 6 USPQ2d 1296, 1298 (D.D.C. 1988) (the legislative scheme leaves the Director's 35 U.S.C. 303 determination entirely to his discretion and not subject to judicial review). These decisions were rendered for *ex parte* reexamination; however, the holdings of these decisions apply equally in *inter partes* reexamination proceedings, since the language of 35 U.S.C. 302(c) (i.e., the *ex parte* reexamination statute) is also found in 35 U.S.C. 312(c) (i.e., the *inter partes* reexamination statute). Because the substantive determination is not subject to review by petition or otherwise, neither the patent owner nor the third party requester has a right to petition, or request reconsideration of, a finding that the prior art patents or printed publications raise a substantial new question. There is no right to petition such a finding even if the finding of a substantial new question is based on

Copied from 95001852 on 02/01/2012

reasons other than those urged by the third party requester (or based on less than all the grounds urged by the third party requester). Where the examiner determines that a date of a reference is early enough such that the reference constitutes prior art, that determination is not petitionable (with respect to vacating the examiner's finding of a substantial new question). Where the examiner determines that a reference is a printed publication (i.e., that the criteria for publication has been satisfied), that determination is also not petitionable. These matters cannot be questioned with respect to vacating the order granting reexamination until a final agency decision on the reexamination proceeding has issued. Rather, these matters can be argued by the patent owner and appealed during the examination phase of the reexamination proceeding.

A petition under 37 CFR 1.181 may, however, be filed to vacate an *ultra vires* reexamination order, such as where the order for reexamination is not based on prior art patents and printed publications. In cases where no discretion to grant a request for reexamination exists, a petition to vacate the decision to grant, or a request for reconsideration, will be entertained. "Appropriate circumstances" under 37 CFR 1.181(a)(3) exist to vacate the order granting reexamination where, for example:

(A) the reexamination order is not based on prior art patents or printed publications;

(B) reexamination is prohibited under 37 CFR 1.907;

(C) all claims of the patent were held to be invalid by a final decision of a Federal Court after all appeals;

(D) reexamination was ordered for the wrong patent;

(E) reexamination was ordered based on a duplicate copy of the request; or

(F) the reexamination order was based wholly on the same question of patentability raised by the prior art previously considered in an earlier concluded examination of the patent by the Office (e.g., the application which matured into the patent, a prior reexamination, an interference proceeding).

DECISION

The Patent owner ["petitioner"] states that the Order Granting the Request for *Inter Partes* Reexamination is *ultra vires* and that SNQs 23-26 based on the Bingo reference must be vacated. Petitioner argues that it has not been proven that Bingo is a printed publication.

The MPEP clearly states that "[w]here the examiner determines that a reference is a printed publication (i.e., that the criteria for publication has been satisfied), that determination is also not petitionable." MPEP § 2646(II). It goes on to state that this is a matter that cannot be questioned with respect to vacating the order until a final agency decision on the proceeding has issued, and

Copied from 95001852 on 02/01/2012

that the proper avenue for questioning this issue is by argument and appeal during the examination stage.

Petitioner argues that a petition to vacate is permissible because reexamination is not based on patents and printed publications, citing MPEP § 2646(II). Petition p. 2. This portion of section 2646 is also quoted above, and states that a petition may be filed to vacate an *ultra vires* reexamination order in appropriate circumstances where no discretion to grant the request exists, such as where the order is not based on patents or printed publications.

Petitioner's reading of the MPEP is not correct, as it would clearly contradict the immediately preceding paragraph explicitly stating that such an issue is not petitionable. Rather, it is apparent that section 2646(II)(A) permits a petition only where no discretion exists to grant the request. A determination of whether a reference is a printed publication falls under the examiner's discretion, and as stated above this is an issue that may be argued by patent owner during examination. MPEP § 2646(II)(A) does not refer to a case where the examiner determines that a reference is a printed publication, but instead refers to a case when an order is based upon issues that cannot be alleged to be patents or printed publications at all. For example, if a reexamination request were granted based upon an indefiniteness issue under 35 U.S.C. § 112, such an action would be petitionable as *ultra vires* as the examiner has no discretion to grant such a request.

The examiner, in granting the request, has at least implicitly determined that the Bingo reference is a printed publication. As stated in the MPEP, such a determination is not petitionable, therefore the petition is dismissed.

Petitioner might argue that the examiner never actually made such a determination, as he did not state on the record that Bingo was a printed publication. But it is a clear statutory requirement that reexamination may only be requested on the basis of patents and printed publications. 35 U.S.C. §§ 311(a) & 301. The mere grant of a reexamination request therefore requires that the examiner determine the cited references to be patents and/or printed publications. That is, if the request is granted, that determination is implicit[1] in the examiner's grant. It adds nothing to require the examiner to explicitly say "The reference is a printed publication." Of course, the examiner is free to elaborate as necessary, but this is not needed here.

[1] Many findings and determinations are made in patent examination implicitly. Indeed, reasons for allowance, which might be considered the most important determination an examiner can make with respect to an application, need not be explicitly discussed if they are implicitly clear in the record. *See* MPEP 1302.14. As another example, it is requirement in an obviousness rejection to resolve the level of ordinary skill in the art, but such findings need not be made explicit if they are implicit based on the art present in the record. *See* MPEP 2141.03(II).

Copied from 95001852 on 02/01/2012

Bingo bears a copyright date of 1999, and is dated March 1999. *See* Bingo p. 3. Petitioner cites a district court case, which is not binding on the Office, to show that this is insufficient evidence of publication. But the Board has on numerous occasions accepted a copyright date as sufficient evidence for making a prima facie case of unpatentability. *See, e.g.*, *Ex parte Oliver*, Appeal No. 2009-005524, 13 (B.P.A.I. Aug. 12, 2010); *Ex parte Craig*, Appeal No. 2008-002754, 13 (B.P.A.I. Apr. 24, 2010); *Ex parte Tognazzini*, Appeal No. 2000-0765, 15-16 (B.P.A.I. May 20, 2002).[2] It is therefore clearly sufficient to raise a substantial new question of patentability, a lesser standard, and the examiner's implicit acceptance of that date was not improper.

Accordingly, the petition dismissed.

CONCLUSION

1. The petition under 37 CFR § 1.181 for vacating the Order as *ultra vires* is dismissed.

2. Telephone inquiries related to this decision should be directed to Mark Reinhart, Supervisory Patent Examiner, at (571) 272-1611 or in his absence to the undersigned at (571) 272-0700.

Irem Yucel
Director, Central Reexamination Unit

[2] While not precedential, the Director is aware of no precedential opinion directly on point.

Copied from 95001852 on 02/01/2012

UNITED STATES PATENT AND TRADEMARK OFFICE

UNITED STATES DEPARTMENT OF COMMERCE
United States Patent and Trademark Office
Address: COMMISSIONER FOR PATENTS
P.O. Box 1450
Alexandria, Virginia 22313-1450
www.uspto.gov

APPLICATION NO.	FILING DATE	FIRST NAMED INVENTOR	ATTORNEY DOCKET NO.	CONFIRMATION NO.
95/001,682	07/11/2011	6,502,135	077580-0132	1074

23630 7590 04/04/2012

McDermott Will & Emery
600 13th Street, NW
Washington, DC 20005-3096

EXAMINER	
ART UNIT	PAPER NUMBER

DATE MAILED: 04/04/2012

Please find below and/or attached an Office communication concerning this application or proceeding.

UNITED STATES PATENT AND TRADEMARK OFFICE

Commissioner for Patents
United States Patents and Trademark Office
P.O.Box 1450
Alexandria, VA 22313-1450
www.uspto.gov

DO NOT USE IN PALM PRINTER

THIRD PARTY REQUESTER'S CORRESPONDENCE ADDRESS

SIDLEY AUSTIN LLP
717 NORTH HARWOOD
SUITE 3400
DALLAS, TX 75201

Date: 4-4-12

Transmittal of Communication to Third Party Requester
Inter Partes Reexamination

REEXAMINATION CONTROL NO. : 95001682
PATENT NO. : 6502135
TECHNOLOGY CENTER : 3999
ART UNIT : 3992

Enclosed is a copy of the latest communication from the United States Patent and Trademark Office in the above identified Reexamination proceeding. 37 CFR 1.903.

Prior to the filing of a Notice of Appeal, each time the patent owner responds to this communication, the third party requester of the inter partes reexamination may once file written comments within a period of 30 days from the date of service of the patent owner's response. This 30-day time period is statutory (35 U.S.C. 314(b)(2)), and, as such, it cannot be extended. See also 37 CFR 1.947.

If an ex parte reexamination has been merged with the inter partes reexamination, no responsive submission by any ex parte third party requester is permitted.

All correspondence relating to this inter partes reexamination proceeding should be directed to the Central Reexamination Unit at the mail, FAX, or hand-carry addresses given at the end of the communication enclosed with this transmittal.

UNITED STATES PATENT AND TRADEMARK OFFICE

Commissioner for Patents
United States Patent and Trademark Office
P.O. Box 1450
Alexandria, VA 22313-1450
www.uspto.gov

MAILED

APR 04 2012

CENTRAL REEXAMINATION UNIT

MCDERMOTT WILL & EMERY
600 13TH STREET, NW
WASHINGTON, DC 20005-3096 (For Patent Owner)

SIDLEY AUSTIN, LLP
717 NORTH HARWOOD
SUITE 3400
DALLAS, TX 75201 (For the '1682 Requester)

Inter Partes Reexamination Proceeding
Control No. 95/001,682
Filed: July 11, 2011
For: U.S. Patent No. 6,502,135

: **DECISION**
: **DIMISSING**
: **PETITION**

This is a decision on patent owner's "PETITION TO SUSPEND AND NOT MERGE *INTER PARTES* REEXAMINATION" ("the petition under 37 CFR 1.182"), filed on November 4, 2011. This decision also addresses third party requester's "PETITION UNDER 37 CFR 1.182 TO PERMIT CONSIDERATION OF INFORMATION IN AN INTER PARTES REEXAMINATION PROCEEDING" ("the opposition"), filed on November 15, 2011.

The patent owner petition under 37 CFR 1.182 is dismissed for the reasons set forth herein.

BACKGROUND

1. On December 31, 2002, U.S. Patent No. 6,502,135 ("the '135 patent") issued to Munger et al.

2. On July 8, 2011, a first request for *inter partes* reexamination of claims 1-18 of the '135 patent was filed by a third party requester and assigned Reexamination Control No. 95/001,679 ("the '1679 proceeding"). The request identified Cisco Systems, Inc. ("the '1679 requester", also referred to herein as "Cisco") as the real party in interest.

3. On July 11, 2011, a second request for *inter partes* reexamination of claims 1-18 of the '135 patent was filed by a third party requester and assigned Reexamination Control No. 95/001,682 ("the '1682 proceeding"). The request identified Apple Inc., ("the '1682 requester", also referred to herein as "Apple") as the real party in interest.

4. On October 3, 2011, *inter partes* reexamination was ordered on claims 1-18 of the '135 patent in the '1679 proceeding.

5. Also, on October 3, 2011, *inter partes* reexamination was ordered on claims 1-18 of the '135 patent in the '1682 proceeding.

6. On November 4, 2011, patent owner filed the instant petition under 37 CFR 1.182 in the '1682 proceeding.

7. On November 15, 2011, the '1682 requester filed the instant opposition to the patent owner's petition under CFR 1.182 in the '1682 proceeding.

8. On February 15, 2012, the Office mailed a non-final Office action on the merits in the '1679 proceeding.

9. Also, on February 15, 2012, the Office mailed a non-final Office action on the merits in the '1682 proceeding.

DECISION

I. Patent owner's petition under 37 CFR 1.182

In the instant petition under 37 CFR 1.182, patent owner (also referred to herein as "VirnetX") requests that the Office suspend the '1682 proceeding "because it appears that Apple initiated a second *inter partes* reexamination of the '135 patent just three days after Cisco to harass VirnetX."[1] In particular, patent owner asserts that, as co-defendants in concurrent district court litigation initiated by patent owner, "Apple ... was clearly aware of at least some of the prior art now asserted by Cisco in its request for reexamination."[2] Additionally, patent owner asserts that "just 3 days after Cisco filed its reexamination request, Apple filed a request for *inter partes* reexamination of the '135 patent based on eleven references totally different from the thirteen references asserted by Cisco."[3] Accordingly, patent owner asserts that "[t]hese facts appear to suggest that Cisco and Apple ... chose not to assert all the prior art they were aware of in district court but instead chose to file two separate *inter partes* reexaminations within days of each other to harass VirnetX," such that suspension of the '1682 proceeding is appropriate pursuant to MPEP 2640(II)(A).[4]

In the alternative, patent owner requests that the Office not merge the "Cisco-initiated" '1679 proceeding and the "Apple-initiated" '1682 proceeding.[5] Patent owner also requests, should the Office merge the '1679 and the '1682 proceedings, that the Office "instruct Apple and Cisco that each may only comment on and participate in an appeal from only those issues that it raised in its own request for reexamination."[6]

---

[1] Petition under 37 CFR 1.182 at page 3.
[2] Id. at page 4.
[3] Id.
[4] Id.
[5] Id. at pages1 and 4.
[6] Id. at page 6.

II. The '1682 requester's opposition

In the instant opposition, the '1682 requester asserts that patent owner's petition under 37 CFR 1.182 is "premature and calls for action that would be inconsistent with established Office practice."[7] Further, the '1682 requester challenges the facts patent owner relies on to support its allegation that Apple filed the instant request in the '1682 proceeding solely to harass patent owner.[8] Specifically, the '1682 requester asserts that it attempted to file its request on July 8, 2011 but was not able to file the request until July 11, 2011 due to a malfunction with the Office's EFS-Web system.[9] The '1682 requester also asserts that "as the Office has already determined, Apple's request was meritorious – the Office has determined that twenty-six substantial new questions of patentability are raised by the prior art cited solely by Apple, and that the substantial new questions of patentability are entirely distinct from those raised by the different prior art cited by Cisco."[10] Finally, the '1682 requester asserts that "Apple is not in privity with Cisco."[11]

III. Findings and Analysis

In the instant petition under 37 CFR 1.182, patent owner requests suspension of the '1682 proceeding on the basis that the request for reexamination in the '1682 proceeding was filed for purposes of harassment. MPEP 2640(II)(A) provides, in-part (emphasis added):

> Where reexamination is granted on a second or subsequent request, but the patent owner can clearly show that the second or subsequent request was filed for purposes of harassment, the patent owner ***can petition*** under 37 CFR 1.182 that the second or subsequent request should be suspended. If such a petition is granted, prosecution on the second or subsequent reexamination would be suspended until conclusion of proceedings in the first reexamination. In such an instance, merger of the second (or subsequent) reexamination with the first would unduly prolong the conclusion of the pending reexamination and be inconsistent with the requirement that the reexamination proceeding be conducted with special dispatch.

As a preliminary matter, the instant patent owner petition under 37 CFR 1.182, requesting suspension of the '1682 proceeding on the basis that the '1682 proceeding was filed for purposes of harassment, is not an improper paper under 37 CFR 1.939. MPEP 2640(II)(A) expressly authorizes such petition can be filed where reexamination is granted in a proceeding which patent owner contends was filed for purposes of harassment.

Regarding the propriety of Apple's request for reexamination of the '135 patent in the '1682 proceeding, 35 USC 311(a) provides that "[a]ny third-party requester at any time may file a request for inter partes reexamination by the Office of a patent on the basis of any prior art cited under the provisions of section 301."[12] Thus, Apple is not precluded from filing a request for *inter*

---

[7] Opposition at page 2.
[8] Id.
[9] Id.
[10] Id. at page 3.
[11] Id.
[12] See also 37 CFR 1.913 (providing, "Except as provided for in § 1.907, any person other than the patent owner or its privies may, at any time during the period of enforceability of a patent which issued from an original application filed

partes reexamination of the '135 where a co-defendant in concurrent infringement litigation initiated by patent owner already filed a request for *inter partes* reexamination of the '135 patent.[13] The filing of Apple's request is permitted by the *inter partes* reexamination statutes and, therefore, on its face, does not clearly show harassment. Additionally, contrary to patent owner's assertion, the filing of Apple's request for *inter partes* reexamination of the '135 patent in the '1682 proceeding just three days after the filing of Cisco's request in the '1679 proceeding should benefit patent owner by enabling patent owner to address all of the patentability issues raised in both requests together in a timely fashion. Under the facts and circumstances in this instance, it would be more efficient for both the patent owner and the Office to resolve the patentability issues raised in both requests together as opposed to, for example, had Apple waited until the conclusion of Cisco's '1679 proceeding to file its request in the '1682 proceeding.

Further, MPEP 2642 provides that reexamination of a patent which has previously undergone a reexamination proceeding is permitted where the subsequent request independently provides an SNQ which is different from that raised in the pending reexamination for the claims in effect at the time of the determination.[14] This requirement, that a subsequent request for reexamination contain a new SNQ, provides a safeguard against harassment of the patent owner. As set forth in the October 3, 2011 order granting reexamination in the '1679 proceeding, the examiner has found that Cisco's request in the '1679 proceeding for reexamination of the '135 patent raises SNQs, and as set forth in the October 3, 2011 order granting reexamination in the '1682 proceeding, the examiner has found that Apple's request in the '1682 proceeding for reexamination of the '135 patent also raises SNQs. Whether Cisco had been aware of the art that Apple presented in its request in the '1682 proceeding at the time Cisco filed its request in the '1679 proceeding does not clearly show Apple's request was filed for purposes of harassment where both requests raised SNQs. Therefore, on this record, patent owner has not presented facts clearly showing that Apple's request for *inter partes* reexamination of the '135 patent in the '1682 proceeding was filed for purposes of harassment and patent owner's November 4, 2011 petition under 37 CFR 1.182 is dismissed.

Patent owner's alternative request not to merge the '1679 and the '1682 proceedings is being treated as a notification of concurrent proceedings pursuant to 37 CFR 1.985(a) and MPEP 2686. As set forth in MPEP 2686.01(I), decisions to merge or not to merge co-pending reexamination proceedings is at the sole discretion of the Office:

> Where a second request for reexamination is filed and reexamination is ordered, and a first reexamination proceeding is pending, the proceedings will be merged

---

in the United States on or after November 29, 1999, file a request for *inter partes* reexamination by the Office of any claim of the patent on the basis of prior art patents or printed publications cited under § 1.501.").

[13] There are no allegations that any of the estoppel provisions would apply in this instance.

[14] See MPEP 2642(I) (stating "However, in order for the second or subsequent request for reexamination to be granted, the second or subsequent requester must independently provide a substantial new question of patentability which is different from that raised in the pending reexamination for the claims in effect at the time of the determination. ... If a "different" substantial new question of patentability is not provided by the second or subsequent request for the claims in effect at the time of the determination, the second or subsequent request for reexamination must be denied since the Office is only authorized by statute to grant a reexamination proceeding based on a substantial new question of patentability "affecting any claim of the patent." See 35 U.S.C. 312. Accordingly, there must be at least one substantial new question of patentability established for the existing claims in the patent in order to grant reexamination.).

where the Office (in its discretion) deems it appropriate to do so, to facilitate the orderly handling of the proceedings. However, a decision not to merge is within the sole discretion of the Office to facilitate/carry out the statutory mandate of 35 U.S.C. 314(c) to conduct reexamination proceedings with "special dispatch".

Merger of the '1679 and '1682 proceedings cannot be considered at this time because of the outstanding Office actions. The '1679 and '1682 proceedings will not be ripe for consideration of merger until all responses/comments after the February 15, 2012 Office actions are filed (or the time for filing such responses/comments has expired). At that time, should the Office exercise its discretion to merge the '1679 and '1682 proceedings, the merger decision will explicitly set forth the participation rights of the parties to the merged proceeding.

CONCLUSION

1. Patent owner's November 4, 2011 petition under 37 CFR 1.182 is dismissed.

2. Telephone inquiries related to the present decision should be directed to Nicole D. Haines, Legal Advisor, at 571-272-7717 or to the undersigned at 571-272-7726.

Pinchus M. Laufer
Senior Legal Advisor
Office of Patent Legal Administration

April 3, 2012

UNITED STATES PATENT AND TRADEMARK OFFICE

UNITED STATES DEPARTMENT OF COMMERCE
United States Patent and Trademark Office
Address: COMMISSIONER FOR PATENTS
P.O. Box 1450
Alexandria, Virginia 22313-1450
www.uspto.gov

APPLICATION NO.	FILING DATE	FIRST NAMED INVENTOR	ATTORNEY DOCKET NO.	CONFIRMATION NO.
95/001,683	07/11/2011	6,849,360 B2	3068.002REX0	2538

19527 7590 11/18/2011

Eveready Battery Company, Inc.
c/o Greenblum & Bernstein, P.L.C.
1950 Roland Clarke Place
Reston, VA 20191

EXAMINER	
ART UNIT	PAPER NUMBER

DATE MAILED: 11/18/2011

Please find below and/or attached an Office communication concerning this application or proceeding.

UNITED STATES PATENT AND TRADEMARK OFFICE

Commissioner for Patents
United States Patents and Trademark Office
P.O.Box 1450
Alexandria, VA 22313-1450
www.uspto.gov

DO NOT USE IN PALM PRINTER

THIRD PARTY REQUESTER'S CORRESPONDENCE ADDRESS
STERNE, KESSLER, GOLDSTEIN & FOX PLLC
1100 NEW YORK AVENUE, N.W.
WASHINGTON, DC 20005

Date:

MAILED

NOV 18 2011

CENTRAL REEXAMINATION UNIT

Transmittal of Communication to Third Party Requester
Inter Partes Reexamination

REEXAMINATION CONTROL NO. : 95001683
PATENT NO. : 6849360
TECHNOLOGY CENTER : 3999
ART UNIT : 3991

Enclosed is a copy of the latest communication from the United States Patent and Trademark Office in the above identified Reexamination proceeding. 37 CFR 1.903.

Prior to the filing of a Notice of Appeal, each time the patent owner responds to this communication, the third party requester of the inter partes reexamination may once file written comments within a period of 30 days from the date of service of the patent owner's response. This 30-day time period is statutory (35 U.S.C. 314(b)(2)), and, as such, it cannot be extended. See also 37 CFR 1.947.

If an ex parte reexamination has been merged with the inter partes reexamination, no responsive submission by any ex parte third party requester is permitted.

All correspondence relating to this inter partes reexamination proceeding should be directed to the Central Reexamination Unit at the mail, FAX, or hand-carry addresses given at the end of the communication enclosed with this transmittal.

UNITED STATES PATENT AND TRADEMARK OFFICE

Commissioner for Patents
United States Patent and Trademark Office
P.O. Box 1450
Alexandria, VA 22313-1450
www.uspto.gov

MAILED

NOV 18 2011

CENTRAL REEXAMINATION UNIT

Eveready Battery Company, Inc.
c/o Greenblum & Bernstein, P.L.C.
1950 Roland Clarke Place
Reston, VA 20191

(For Patent Owner)

Sterne, Kessler, Goldstein & Fox PLLC
1100 New York Avenue, N.W.
Washington, DC 20005

(For Third Party Requester)

In re Jack W. Marple
Inter Partes Reexamination Proceeding
Control No. 95/001,683
Filed: July 11, 2011
For: U.S. Patent No. 6,849,360

DECISION DISMISSING PETITION

This is a decision on the patent owner paper entitled "PETITION PURSUANT TO 37 C.F.R. 1.183 TO SUSPEND THE FIFTY PAGE LIMIT OF PATENT OWNER'S RESPONSE," filed on September 27, 2011.

The patent owner petition is before the Office of Patent Legal Administration for consideration.

The petition requesting waiver of the page limit for patent owner's response is **dismissed**.

REVIEW OF THE RELEVANT FACTS

1. On February 14, 2006, United States Patent No. 6,849,360 (the '360 patent) issued to Jack W. Marple.

2. On July 11, 2011, a request for *inter partes* reexamination of the '360 patent was filed by a third party requester, which request was assigned Reexamination Control No. 95/001,683 (the '1683 proceeding).

3. On September 2, 2011, the Office mailed an order granting *inter partes* reexamination in the '1683 proceeding, accompanied by an Office action on the merits.

4. On September 27, 2011, patent owner filed the instant petition entitled, "PETITION PURSUANT TO 37 C.F.R. 1.183 TO SUSPEND THE FIFTY PAGE LIMIT OF PATENT OWNER'S RESPONSE" (petition under 37 CFR 1.183).

5. On September 27, 2011, patent owner also filed a request for one-month extension of time to respond to the September 2, 2011 Office action.

6. On October 11, 2011, patent owner's petition for a one-month extension of time was granted, extending the period for response to the September 2, 2011 Office action to December 2, 2011.

DECISION

Relevant Statutes, Regulations and Procedures

37 CFR 1.183 provides:

> In an extraordinary situation, when justice requires, any requirement of the regulations in this part which is not a requirement of the statutes may be suspended or waived by the Director or the Director's designee, sua sponte, or on petition of the interested party, subject to such other requirements as may be imposed. Any petition under this section must be accompanied by the petition fee set forth in § 1.17(f).

37 CFR 1.943(b) provides:

> Responses by the patent owner and written comments by the third party requester shall not exceed 50 pages in length, excluding amendments, appendices of claims, and reference materials such as prior art references.

Patent Owner's Petition under 37 CFR 1.183

In the instant petition, patent owner requests suspension of 37 CFR 1.943(b), which limits patent owner responses to 50 pages in length. In support of patent owner's request for waiver of 37 CFR 1.943(b), patent owner asserts that "[f]airly, a 58 page Office Action with thirty-seven (37) separate grounds of rejections, based on a 537 page Request (plus additional twenty-six (26) Exhibits) cannot be addressed in a fifty (50) page response" and that "[f]urther, all twenty-two (22) claims of the patent, excepting claims 12 and 13, have been rejected by at least four (4) separate applications of prior art."[1] Patent owner also asserts that "now [patent owner] has the burden to fully respond, in fifty pages, to a 58 page Office Action, which includes hundreds of pages of additional material that was provided by the Requestor, including a declaration that is referenced in rejections set forth in the Office Action" and "that compliance with the 50 page limit in preparing the Patent Owner's Response ("the Response") would not provide the Patent Owner with a fair opportunity for a response."[2]

---

[1] Petition under 37 CFR 1.183 at page 3.
[2] Petition under 37 CFR 1.183 at pages 3-4.

Accordingly, patent owner asserts that "to address all of the separate rejections, as is required by the rules, Patent Owner requests that the Petition be granted to permit a Response of **90 pages**, excluding amendments, appendices of claims, and reference materials such as prior art references, which will provide a fair opportunity for a Patent Owner's response."[3]

Analysis and Findings

The instant petition under 37 CFR 1.183 has been fully considered. 37 CFR 1.183 provides for suspension or waiver of any requirement of the regulations which is not a requirement of the statutes in an extraordinary situation, when justice requires, on petition of the interested party. The burden is on petitioner to set forth with specificity the facts that give rise to an extraordinary situation in which justice requires suspension of a rule. General requests, unsubstantiated by specific facts which justify an increase in the number of pages available for patent owner to respond to an Office action, are not sufficient to demonstrate an extraordinary situation in which justice requires suspension of 37 CFR 1.943(b).

In this instance, patent owner seeks waiver of 37 CFR 1.943(b) to increase the page limit for patent owner's response to the outstanding Office action to a maximum length of 90 pages based on, for example, the length of the Office action and request for *inter partes* reexamination, the number of rejections adopted by the examiner, and the number of claims rejected. Patent owner asserts that "every attempt to make the Response as short as possible"[4] will be taken; however, patent owner has not set forth with specificity the basis on which patent owner determined that 40 extra pages are necessary or would be sufficient for patent owner to adequately respond to the outstanding Office action. Thus, the Office cannot make an accurate determination as to whether waiver of 37 CFR 1.943(b) to permit up to 40 additional pages is appropriate under the circumstances.

A showing which patent owner can make in support of a request for waiver of the 50-page limit of 37 CFR 1.943(b) can be an attempt to draft a patent owner's response in compliance with the 50-page limit, and submission of a resulting response that is in excess of 50 pages concurrently with a renewed petition under 37 CFR 1.183 for waiver of 37 CFR 1.943(b) setting forth the facts supporting the request for waiver of the rule and requesting entry of the submitted response.[5] In this way, as opposed to relying on general estimates that patent owner needs a maximum of 90 pages to develop a response, patent owner can rely on the proposed response: (1) for justification that more pages are needed to complete the response, and (2) to set forth an accurate determination of exactly how many additional pages patent owner deems to be needed to complete the response. Such a response can be evaluated for economizing, extraneous material, and arrangement, without repetition of information already of record, to determine whether waiver of 37 CFR 1.943(b) to permit the additional pages is appropriate under the circumstances.

---

[3] Petition under 37 CFR 1.183 at page 4.

[4] Id.

[5] That is, mere submission of the proposed response with a petition requesting waiver of the rule and entry of the proposed response would not be sufficient. Rather, the petition accompanying the proposed response would need to set to set forth with specificity the facts that give rise to an extraordinary situation in which justice requires suspension of 37 CFR 1.943(b).

Third party requester's comments paper pursuant to 37 CFR 1.947 would be due within 30 days from the mailing date of a decision granting patent owner's renewed petition under 37 CFR 1.183 and entering patent owner's overlength proposed response as page-length compliant.

Note that if the Office does not grant patent owner's renewed petition under 37 CFR 1.183 to the full extent of the suggested proposed response, patent owner would be given a period of 15 days within which to submit a compliant response in accordance with the page limit set forth in the decision on that petition. *See* MPEP 2667(I)(A)(2). Third party requester's comments paper pursuant to 37 CFR 1.947 would then be due within (1) 30 days from the date of service of patent owner's compliant response, submitted in accordance with the page limit set forth in a decision partially-granting patent owner's renewed petition under 37 CFR 1.183, or (2) within 30 days from the date of service of patent owner's rule-compliant response. *See* MPEP 2666.05(I).[6]

Accordingly, for all of the reasons set forth above, patent owner has not presented facts that demonstrate an extraordinary situation in which justice requires suspension of 37 CFR 1.943(b), and the September 27, 2011 petition under 37 CFR 1.183 is dismissed.[7]

CONCLUSION

1. The patent owner's September 27, 2011 petition under 37 CFR 1.183 is **dismissed**.

2. Any questions concerning this communication should be directed to Maria Nuzzolillo at 571-272-8150 or Nicole D. Haines, Legal Advisor, at 571-272-7717.

Pinchus M. Laufer
Senior Legal Advisor
Office of Patent Legal Administration

11-18-2011

[6] It is noted that the guidance set forth in MPEP 2666.05(I) only applies in the unique circumstance when patent owner files a response to an Office action and the page length of the response exceeds the regulatory page limit set by 37 CFR 1.943(b). That is, if patent owner files a petition for waiver of the regulatory page limit in conjunction with a response to an Office action that does not actually exceed the regulatory page limit, the time period for requester's comments submission would be 30 days from the date of the service of the page-length compliant patent owner response.

[7] Note that this decision is not a determination that 90 pages is inappropriate under the circumstances. Rather, the Office cannot properly assess whether 90 pages is appropriate under the circumstances without evaluating patent owner's factual assertions set forth in the instant petition under 37 CFR 1.183 in view of a proposed response submission.

UNITED STATES PATENT AND TRADEMARK OFFICE

UNITED STATES DEPARTMENT OF COMMERCE
United States Patent and Trademark Office
Address: COMMISSIONER FOR PATENTS
P.O. Box 1450
Alexandria, Virginia 22313-1450
www.uspto.gov

APPLICATION NO.	FILING DATE	FIRST NAMED INVENTOR	ATTORNEY DOCKET NO.	CONFIRMATION NO.
95/001,683	07/11/2011	6,849,360 B2	3068.002REX0	2538

19527 7590 03/15/2012

Eveready Battery Company, Inc.
c/o Greenblum & Bernstein, P.L.C.
1950 Roland Clarke Place
Reston, VA 20191

EXAMINER	
ART UNIT	PAPER NUMBER

DATE MAILED: 03/15/2012

Please find below and/or attached an Office communication concerning this application or proceeding.

UNITED STATES PATENT AND TRADEMARK OFFICE

Commissioner for Patents
United States Patents and Trademark Office
P.O.Box 1450
Alexandria, VA 22313-1450
www.uspto.gov

DO NOT USE IN PALM PRINTER

THIRD PARTY REQUESTER'S CORRESPONDENCE ADDRESS
STERNE, KESSLER, GOLDSTEIN & FOX PLLC
1100 NEW YORK AVENUE, N.W.
WASHINGTON, DC 20005

Date:
MAILED
MAR 15 2012
CENTRAL REEXAMINATION UNIT

Transmittal of Communication to Third Party Requester
Inter Partes Reexamination

REEXAMINATION CONTROL NO. : 95001683
PATENT NO. : 6849360
TECHNOLOGY CENTER : 3999
ART UNIT : 3991

Enclosed is a copy of the latest communication from the United States Patent and Trademark Office in the above identified Reexamination proceeding. 37 CFR 1.903.

Prior to the filing of a Notice of Appeal, each time the patent owner responds to this communication, the third party requester of the inter partes reexamination may once file written comments within a period of 30 days from the date of service of the patent owner's response. This 30-day time period is statutory (35 U.S.C. 314(b)(2)), and, as such, it cannot be extended. See also 37 CFR 1.947.

If an ex parte reexamination has been merged with the inter partes reexamination, no responsive submission by any ex parte third party requester is permitted.

All correspondence relating to this inter partes reexamination proceeding should be directed to the Central Reexamination Unit at the mail, FAX, or hand-carry addresses given at the end of the communication enclosed with this transmittal.

UNITED STATES PATENT AND TRADEMARK OFFICE

Commissioner for Patents
United States Patent and Trademark Office
P.O. Box 1450
Alexandria, VA 22313-1450
www.uspto.gov

Eveready Battery Company, Inc.
c/o Greenblum & Bernstein, P.L.C.
1950 Roland Clarke Place
Reston, VA 20191

(For Patent Owner)

MAILED

MAR 15 2012

CENTRAL REEXAMINATION UNIT

Sterne, Kessler, Goldstein & Fox PLLC
1100 New York Avenue, N.W.
Washington, DC 20005

(For Third Party Requester)

In re Jack W. Marple
Inter Partes Reexamination Proceeding
Control No. 95/001,683
Filed: July 11, 2011
For: U.S. Patent No. 6,849,360

DECISION GRANTING PETITION

This is a decision on the patent owner paper entitled "RENEWED PETITION PURSUANT TO 37 C.F.R. 1.183 AND TO SUSPEND THE FIFTY PAGE LIMIT OF PATENT OWNER'S RESPONSE" (the renewed petition under 37 CFR 1.183), filed on December 2, 2011.

The patent owner petition is before the Office of Patent Legal Administration for consideration.

The renewed petition under 37 CFR 1.183 is **granted**.

FEES

Patent owner filed a petition under 37 CFR 1.183 on September 27, 2011 requesting waiver of the 50-page limit of 37 CFR 1.943(b). The $400.00 petition fee under 37 CFR 1.17(f) was charged to patent owner's credit card on September 28, 2011. On November 18, 2011, the Office mailed a decision, dismissing patent owner's September 27, 2011 petition. On December 2, 2011, patent owner filed the instant renewed petition under 37 CFR 1.183. The $400.00 petition fee under 37 CFR 1.17(f) was charged to patent owner's credit card on December 5, 2011. Because the instant petition under 37 CFR 1.183 is a renewed petition, no additional petition fee is required. Accordingly, the $400.00 petition fee that was charged on December 5, 2011 is being returned.

DECISION

I. Background

On September 2, 2011, the Office mailed a non-final office action in the instant 95/001,683 proceeding (the '1683 proceeding). On September 27, 2011, patent owner filed a petition under 37 CFR 1.183, requesting waiver of the 37 CFR 1.943(b) page limit to file a response submission of up to 90 pages in length. On November 18, 2011, the Office mailed a decision dismissing patent owner's September 27, 2011 petition stating that "[a] showing which patent owner can make in support of a request for waiver of the 50-page limit of 37 CFR 1.943(b) can be an attempt to draft a patent owner's response in compliance with the 50-page limit, and submission of a resulting response that is in excess of 50 pages concurrently with a petition under 37 CFR 1.183 for waiver of 37 CFR 1.943(b), requesting entry of the submitted response."[1] On December 2, 2011, in accordance with the November 18, 2011 decision, patent owner filed the instant renewed petition under 37 CFR 1.183, requesting waiver of the regulatory page limit for its concurrently-filed response submission.[2]

II. Patent Owner's December 2, 2011 Renewed Petition under 37 CFR 1.183

Patent Owner states that the instant renewed petition under 37 CFR 1.183 is responsive to the November 18, 2011 decision.[3] In support of its request for waiver of the regulatory page limit for the concurrently-filed response submission, patent owner asserts that the September 2, 2011 Office action consists of 58 pages and that "[w]hile the Examiner did not adopt all of the rejections proposed by the Requestor, the Examiner did adopt many of those rejections made by the Requestor and furthermore set forth additional examiner initiated rejections."[4] Patent owner asserts the concurrently-filed response submission "exceeds the 50 page limit by 9 pages or less."[5] Patent owner further asserts that it "made every effort to file papers that do not exceed the 50 page limit imposed by 37 C.F.R. 1.943(b)" by, for example, "limit[ing] its remarks to independent claim 1 and the rejections specifically applied to the same, thereby reducing the number of issues to be addressed in the present Reexamination Proceeding," "not introduc[ing] extraneous material into the record by responding to arguments and opinions not central to, or relied upon, in the Official Action," and "organiz[ing] the Response to avoid duplicative information."[6]

37 CFR 1.183 provides for suspension or waiver of any requirement of the regulations which is not a requirement of the statutes in an extraordinary situation, when justice requires, on petition of the interested party. The burden is on petitioner to set forth with specificity the facts that give rise to an extraordinary situation in which justice requires suspension of a rule. A showing which petitioner can make in support of a request for waiver of the 50-page limit of 37 CFR

---

[1] See November 18, 2011 decision at page 3.
[2] On October 11, 2011, the Office mailed a decision granting patent owner's September 27, 2011 request for a one-month extension of time to file a response to the September 2, 2011 Office action.
[3] Renewed petition under 37 CFR 1.183 at page 1.
[4] Id. at page 4.
[5] Id.
[6] Id at pages 4-7.

1.943(b) can be an attempt to draft comments in compliance with the 50-page limit, and submission of resulting comments that are in excess of 50 pages concurrently with a petition under 37 CFR 1.183 for waiver of 37 CFR 1.943(b), requesting entry of the submitted comments. Such comments can be evaluated for economizing, extraneous material, and arrangement, without repetition of information already of record. In this way, petitioner can rely on the proposed comments: (1) for justification that more pages are needed to complete the comments, and (2) to set forth an accurate determination of exactly how many additional pages petitioner deems to be needed for the comments.

It is noted that, for purposes of making an accurate determination of exactly how many additional pages over 50 are deemed to be needed for a response submission, a document is deemed to be subject to the 50-page length requirement when the document includes legal argument, *i.e.*, arguments of counsel such as, *e.g.*, arguments that the claims are patentable or unpatentable. Each determination of whether a document, such as an affidavit or declaration, contains a legal argument that will cause the document to be subject to the page count is made on a case-by-case basis. In determining whether a document such as an affidavit or declaration under 37 CFR 1.132, or any other document of a submission, includes legal argument, the Office analyzes whether the document is providing factual evidence, *i.e.*, evidence of **technological facts,** or whether the document contains argument that is merely an extension of the arguments of counsel. Factual evidence includes, for example, declarations that swear behind the filing date of a reference, that establish the date of a printed publication, that provide a technical explanation or technical definition of terms of art used by a reference, or that provide comparative test results and a scientific, or technological, analysis of the results (*see*, *e.g.*, MPEP 716.02). If a document is limited to factual evidence, the document is not included in the page count. In addition, affidavits or declarations limited to establishing commercial success, long-felt need and failure of others, skepticism of experts, or copying, as per MPEP 716.03-716.06, respectively, will not be included in the page count.

In this instance, patent owner has made a showing in support of the request for waiver of the 50-page limit of 37 CFR 1.943(b) by attempting to draft a response submission in compliance with the 50-page limit, and submitting the resulting response, and accompanying declaration, which in total exceed 50 pages.[7] Based on patent owner's showing in support of the request for waiver of the 50-page limit of 37 CFR 1.943(b) by attempting to draft a response submission in compliance with the 50-page limit and submitting the resulting response which is in excess of 50 pages, and the individual facts and circumstances of this case, it is deemed equitable to waive the 50-page limit of 37 CFR 1.943(b) in this instance to the extent patent owner's December 2, 2011 response submission exceeds 50 pages.

Accordingly, patent owner's December 2, 2011 renewed petition under 37 CFR 1.183 is granted and the page limit of 37 CFR 1.943(b) is waived to the extent necessary to permit entry of patent

[7] The December 2, 2011 response submission comprises 42 pages of remarks that count toward the regulatory page limit (the cover page, table of contents, listing of claims, and list of exhibits are excluded from the page count). Additionally, because at least portions of the 18-page declaration of Ralph E. White are deemed to be an extension of the arguments of counsel and count toward the regulatory page limit, the declaration is being counted toward the regulatory page limit. Thus, the December 2, 2011 response submission including the remarks and declaration exceed the 50-page limit by up to 10 pages.

owner's December 2, 2011 response submission. **This waiver makes patent owner's December 2, 2011 response submission page-length compliant**.

CONCLUSION

1. The patent owner's December 2, 2011 renewed petition under 37 CFR 1.183 is **granted** and the page limit of 37 CFR 1.943(b) is waived to the extent necessary to permit entry of patent owner's December 2, 2011 response submission. This waiver makes patent owner's December 2, 2011 response submission page-length compliant.

2. The third party requester has **30 days from the date of this decision**, granting patent owner's December 2, 2011 petition under 37 CFR 1.183 and entering patent owner's December 2, 2011 response submission as page-length compliant, to file a comment paper pursuant to 37 CFR 1.947.

3. Any questions concerning this communication should be directed to Maria Nuzzolillo at 571-272-8150 or Nicole D. Haines, Legal Advisor, at 571-272-7717.

Pinchus M. Laufer
Senior Legal Advisor
Office of Patent Legal Administration

3-14-2012

Doc Code: PET.AUTO **Document Description: Petition automatically granted by EFS-Web**	PTO/SB/83 U.S. Patent and Trademark Office Department of Commerce

Electronic Petition Request	**REQUEST FOR WITHDRAWAL AS ATTORNEY OR AGENT AND CHANGE OF CORRESPONDENCE ADDRESS**
Application Number	95001687
Filing Date	13-Jul-2011
First Named Inventor	Alan Drizen
Art Unit	3991
Examiner Name	DWAYNE JONES
Attorney Docket Number	033083.0009-US04
Title	TOPICAL DRUG PREPARATIONS

◉ Please withdraw me as attorney or agent for the above identified patent application and the practitioners of record associated with Customer Number: 20529

The reason(s) for this request are those described in 37 CFR:

10.40(b)(4)

Certifications

☒ I/We have given reasonable notice to the client, prior to the expiration of the response period, that the practitioner(s) intend to withdraw from employment

☒ I/We have delivered to the client or a duly authorized representative of the client all papers and property (including funds) to which the client is entitled

☒ I/We have notified the client of any responses that may be due and the time frame within which the client must respond

Change the correspondence address and direct all future correspondence to the first named inventor or assignee that has properly made itself of record pursuant to 37 CFR 3.71:

Name	GLYCOBIOSCIENCES INC.
Address	129 MAIN STREET SOUTH
City	GEORGETOWN, ONTARIO
State	
Postal Code	L7G 3E5
Country	CA

I am authorized to sign on behalf of myself and all withdrawing practitioners.	
Signature	/Tanya E. Harkins/
Name	Tanya Harkins
Registration Number	52993

UNITED STATES PATENT AND TRADEMARK OFFICE

Commissioner for Patents
United States Patent and Trademark Office
P.O. Box 1450
Alexandria, VA 22313-1450
www.uspto.gov

Decision Date : August 23,2011

In re Application of :

Alan Drizen

Application No : 95001687

Filed : 13-Jul-2011

Attorney Docket No : 033083.0009-US04

DECISION ON REQUEST TO WITHDRAW AS ATTORNEY/AGENTOF RECORD

This is an electronic decision on the Request to Withdraw as attorney or agent of record under 37 CFR § 1.36(b), filed August 23,2011

The request is **APPROVED.**

The request was signed by Tanya Harkins (registration no. 52993) on behalf of all attorneys/agents associated with Customer Number 20529 . All attorneys/agents associated with Cusotmer Number 20529 have been withdrawn.

Since there are no remaining attorneys of record, all future communications from the Office will be directed to the first named inventor or assignee that has properly made itself of record pursuant to 37 CFR 3.71, with correspondence address:

Name GLYCOBIOSCIENCES INC.

Name2

Address 1 129 MAIN STREET SOUTH

Address 2

City GEORGETOWN, ONTARIO

State

Postal Code L7G 3E5

Country CA

As a reminder, requester is required to inform the first named inventor or assignee that has properly made itself of record pursuant to 37 CFR 3.71 of the electronically processed petition.

Telephone inquiries concerning this decision should be directed to the Patent Electronic Business Center (EBC) at 866-217-9197.

Office of Petitions

UNITED STATES PATENT AND TRADEMARK OFFICE

UNITED STATES DEPARTMENT OF COMMERCE
United States Patent and Trademark Office
Address: COMMISSIONER FOR PATENTS
P.O. Box 1450
Alexandria, Virginia 22313-1450
www.uspto.gov

APPLICATION NO.	FILING DATE	FIRST NAMED INVENTOR	ATTORNEY DOCKET NO.	CONFIRMATION NO.
95/001,687	07/13/2011	Alan Drizen	033083.0009-US04	4940

20311 7590 01/31/2012

LUCAS & MERCANTI, LLP
475 PARK AVENUE SOUTH
15TH FLOOR
NEW YORK, NY 10016

EXAMINER	
ART UNIT	PAPER NUMBER

DATE MAILED: 01/31/2012

Please find below and/or attached an Office communication concerning this application or proceeding.

UNITED STATES PATENT AND TRADEMARK OFFICE

Commissioner for Patents
United States Patents and Trademark Office
P.O.Box 1450
Alexandria, VA 22313-1450
www.uspto.gov

DO NOT USE IN PALM PRINTER

THIRD PARTY REQUESTER'S CORRESPONDENCE ADDRESS

COVINGTON & BURLING, LLP
ATTN: PATENT DOCKETING
1201 PENNSYLVANIA AVENUE, NW
WASHINGTON, DC 20004-2401

Date:

MAILED

JAN 31 2012

CENTRAL REEXAMINATION UNIT

Transmittal of Communication to Third Party Requester
Inter Partes Reexamination

REEXAMINATION CONTROL NO. : 95001687
PATENT NO. : 6723345
TECHNOLOGY CENTER : 3999
ART UNIT : 3991

Enclosed is a copy of the latest communication from the United States Patent and Trademark Office in the above identified Reexamination proceeding. 37 CFR 1.903.

Prior to the filing of a Notice of Appeal, each time the patent owner responds to this communication, the third party requester of the inter partes reexamination may once file written comments within a period of 30 days from the date of service of the patent owner's response. This 30-day time period is statutory (35 U.S.C. 314(b)(2)), and, as such, it cannot be extended. See also 37 CFR 1.947.

If an ex parte reexamination has been merged with the inter partes reexamination, no responsive submission by any ex parte third party requester is permitted.

All correspondence relating to this inter partes reexamination proceeding should be directed to the Central Reexamination Unit at the mail, FAX, or hand-carry addresses given at the end of the communication enclosed with this transmittal.

Decision on Petition for Extension of Time in Reexamination	Control No.:95/001,687

MAILED

JUN 5 1 2012

CENTRAL REEXAMINATION UNIT

1. THIS IS A DECISION ON THE PETITION FILED January 27, 2012.

2. THIS DECISION IS ISSUED PURSUANT TO:
   A. ☐ 37 CFR 1.550(c) – The time for taking any action by a patent owner in an *ex parte* reexamination proceeding will be extended only for sufficient cause and for a reasonable time specified.
   B. ☒ 37 CFR 1.956 – The time for taking any action by a patent owner in an *inter partes* reexamination proceeding will be extended only for sufficient cause and for a reasonable time specified.

   The petition is before the Central Reexamination Unit for consideration.

3. FORMAL MATTERS

   Patent owner requests that the period for responding to the Office action mailed on September 30, 2011, which sets a two-month period for filing a response thereto, be extended a third time for an additional one month.

   A. ☒ Petition fee per 37 CFR §1.17(g)):
      i. ☒ Petition includes authorization to debit a deposit account.
      ii. ☐ Petition includes authorization to charge a credit card account.
      iii. ☐ Other: _____.
   B. ☒ Proper certificate of service was provided. (Not required in reexamination where patent owner is requester.)
   C. ☒ Petition was timely filed.
   D. ☒ Petition properly signed.

4. DECISION (See MPEP 2265 and 2665)
   A. ☐ Granted or ☒ Granted-in-part for **two weeks**, because petitioner provided a factual accounting that established sufficient cause. (See 37 CFR 1.550(c) and 37 CFR 1.956).
      ☐ Other/comment: _____.
   B. ☐ Dismissed because:
      i. ☐ Formal matters (See unchecked box(es) (A, B, C and/or D) in section 4 above).
      ii. ☐ Petitioner failed to provide a factual accounting of reasonably diligent behavior by all those responsible for preparing a response to the outstanding Office action within the statutory time period.
      iii. ☐ Petitioner failed to explain why, in spite of the action taken thus far, the requested additional time is needed.
      iv. ☐ The statements provided fail to establish sufficient cause to warrant extension of the time for taking action (See attached).
      v. ☐ The petition is moot.
      vi. ☐ Other/comment: _____.

5. CONCLUSION Patent Owner is reminded that the period for response cannot be extended beyond six months from the mail date of the non-final Office action.

   Telephone inquiries with regard to this decision should be directed to Deborah Jones at 571-272-1535 in the Central Reexamination Unit.

/Deborah Jones/ SPE, Art Unit 3991, CRU
[*Signature*] (Title)

UNITED STATES PATENT AND TRADEMARK OFFICE

UNITED STATES DEPARTMENT OF COMMERCE
United States Patent and Trademark Office
Address: COMMISSIONER FOR PATENTS
P.O. Box 1450
Alexandria, Virginia 22313-1450
www.uspto.gov

APPLICATION NO.	FILING DATE	FIRST NAMED INVENTOR	ATTORNEY DOCKET NO.	CONFIRMATION NO.
95/001,689	07/18/2011	7833053	PPC.4089US4RE-NY	1278

72687 7590 12/12/2011

JOHN MEZZALINGUA ASSOCIATES, INC.
C/O SCHMEISER OLSEN & WATTS
22 CENTURY HILL DRIVE, SUITE 302
LATHAM, NY 12110

EXAMINER	
ART UNIT	PAPER NUMBER

DATE MAILED: 12/12/2011

Please find below and/or attached an Office communication concerning this application or proceeding.

UNITED STATES PATENT AND TRADEMARK OFFICE

Commissioner for Patents
United States Patents and Trademark Office
P.O.Box 1450
Alexandria, VA 22313-1450
www.uspto.gov

DO NOT USE IN PALM PRINTER

THIRD PARTY REQUESTER'S CORRESPONDENCE ADDRESS
FOLEY AND LARDNER LLP
3000 K STREET N.W.
SUITE 500
WASHINGTON, D.C. 20007

Date:
MAILED
DEC 12 2011
CENTRAL REEXAMINATION UNIT

Transmittal of Communication to Third Party Requester
Inter Partes Reexamination

REEXAMINATION CONTROL NO. : 95001689
PATENT NO. : 7833053
TECHNOLOGY CENTER : 3999
ART UNIT : 3992

Enclosed is a copy of the latest communication from the United States Patent and Trademark Office in the above identified Reexamination proceeding. 37 CFR 1.903.

Prior to the filing of a Notice of Appeal, each time the patent owner responds to this communication, the third party requester of the inter partes reexamination may once file written comments within a period of 30 days from the date of service of the patent owner's response. This 30-day time period is statutory (35 U.S.C. 314(b)(2)), and, as such, it cannot be extended. See also 37 CFR 1.947.

If an ex parte reexamination has been merged with the inter partes reexamination, no responsive submission by any ex parte third party requester is permitted.

All correspondence relating to this inter partes reexamination proceeding should be directed to the Central Reexamination Unit at the mail, FAX, or hand-carry addresses given at the end of the communication enclosed with this transmittal.

UNITED STATES PATENT AND TRADEMARK OFFICE

Commissioner for Patents
United States Patent and Trademark Office
P.O. Box 1450
Alexandria, VA 22313-1450
www.uspto.gov

MAILED

DEC 12 2011

CENTRAL REEXAMINATION UNIT

Arlen L. Olsen : (For Patent Owner)
SCHMEISER, OLSEN & WATTS :
22 Century Hill Drive :
Suite 302 :
Latham, NY. 12110 :

Matthew A. Smith :
FOLEY & LARDNER : (For Third Party
3000 K Street N.W., Suite 600 : Requester)
Washington D.C. 20007 :

:

In re: Mathews :
Inter Partes Reexamination Proceeding : DECISION ON PETITION
Control No.: 95/001,689 :
For: U.S. Patent No.: 7,833,053 :

This is a decision on a petition filed by the Third Party Requestor: a petition filed on November 17, 2011, entitled "PETITION PURSUANT TO 37 C.F.R. § 1.182 TO REFUSE CONSIDERATION AND/OR STRIKE PATENT OWNER'S RESPONSE".

The petition is before the Director of the Central Reexamination Unit. The petition is **dismissed as moot**.

REVIEW OF RELEVANT FACTS

- U.S. Patent No. 7,833,053 issued on November 16, 2010.
- A request for *inter partes* reexamination was July 18, 2011 and assigned control no. 95/001,689.
- *Inter partes* reexamination was ordered on August 18, 2011.
- A Non-Final Office Action was mailed on August 18, 2011.

- Patent Owner's Response to the Non-Final Office Action was received by the Office and serviced to the Third Party Requestor on October 18, 2011.

- The Third Party Requestor's Comments responsive to the Patent Owners comments after the Non-Final Office Action were received and serviced to the Patent Owner on November 17, 2011.

- The Third Party Requestor filed a Petition "petition" on November 17, 2011.

- The Office mailed a Notice of Defective Paper, on November 23, 2011, in regards to the Patent Owner's Response, and provided a time period of 30 days to make specified corrections.

STATUTES, REGULATIONS, AND PATENT EXAMINING PROCEDURES

37 C.F.R. § 1.181 Petition to the Director

(f) The mere filing of a petition will not stay any period for reply that may be running against the application, nor act as a stay of other proceedings. Any petition under this part not filed within two months of the mailing date of the action or notice from which relief is requested may be dismissed as untimely, except as otherwise provided. This two-month period is not extendable.

DECISION

The Third Party Requestor ["petitioner"] argues in the petition that the Patent Owner's Response dated October 18, 2011 exceeds 50 pages in length and therefore should be refused consideration and/or stricken from the record.

Petition
As a procedural matter, the petition is treated as a petition under 37 CFR § 1.181.

A paper such as a the Patent Owner's Response Responses shall **not exceed** 50 pages in length, excluding amendments, appendices of claims, and reference materials such as prior art references. As noted in the petition the Patent Owner's Response exceeded the 50-page limit of 37 C.F.R. § 1.943(b). The Office agrees with the petitioner's determination and the Patent Owner's Response dated October 18, 2011 will **not** be given consideration in the proceedings. However, in response to the Office's Notice of Defective Paper dated November 23, 2011 the Patent Owner submitted a Corrected Patent Owner Response and serviced to the third Party Requestor, dated December 1, 2011, making the appropriate corrections and **not** exceeding the 50-page limit. The Office agrees with the Patent Owners determination that the response indeed does not exceed the 50-page limit, as is also required in the petition.

Therefore, based on the above determination the Petition is **dismissed as moot**. The Patent Owner's Response dated October 18, 2011 will **not** be considered by the Office. The Third Party Requestor will be provided an opportunity to submit Comments in response to the Patent Owner's response within 30 days from the service of the Patent Owner's Response dated December 1, 2011.

CONCLUSION

1. The petitions filed November 17, 2011, is **dismissed as moot**.

2. The most-recent Office action, as listed in the statement of facts herein, remains outstanding and the Third Party Requestor's comments are due as set forth in this Petition Decision.

3. Telephone inquiries related to this decision should be directed to Sudhanshu C. Pathak, Supervisory Patent Reexamination Examiner, at (571) 272-5509 or in his absence to the undersigned at (571) 272-0700.

Irem Yucel
Director, Central Reexamination Unit

UNITED STATES PATENT AND TRADEMARK OFFICE

Commissioner for Patents
United States Patent and Trademark Office
P.O. Box 1450
Alexandria, VA 22313-1450
www.uspto.gov

MAILED

DEC 12 2011

CENTRAL REEXAMINATION UNIT

Jonathan M. Madsen
SCHMEISER, OLSEN & WATTS
22 Century Hill Drive
Suite 302
Latham, NY. 12110

(For Patent Owner)

Matthew A. Smith
FOLEY & LARDNER
3000 K Street N.W., Suite 600
Washington D.C. 20007

(For Third Party Requester)

In re: Mathews
Inter Partes Reexamination Proceeding
Control No.: 95/001,691
For: U.S. Patent No.: 7,828,595

DECISION ON PETITION

This is a decision on a petition filed by the Third Party Requestor: a petition filed on November 17, 2011, entitled "PETITION PURSUANT TO 37 C.F.R. § 1.182 TO REFUSE CONSIDERATION AND/OR STRIKE PATENT OWNER'S RESPONSE".

The petition is before the Director of the Central Reexamination Unit. The petition is **dismissed as moot**.

REVIEW OF RELEVANT FACTS

- U.S. Patent No. 7,828,595 issued on November 9, 2010.
- A request for *inter partes* reexamination was July 19, 2011 and assigned control no. 95/001,691.
- *Inter partes* reexamination was ordered on August 19, 2011.
- A Non-Final Office Action was mailed on August 19, 2011.

- Patent Owner's Response to the Non-Final Office Action was received by the Office and serviced to the Third Party Requestor on October 19, 2011.

- The Third Party Requestor's Comments responsive to the Patent Owners comments after the Non-Final Office Action were received and serviced to the Patent Owner on November 17, 2011.

- The Third Party Requestor filed a Petition "petition" on November 17, 2011.

- The Office mailed a Notice of Defective Paper, on November 23, 2011, in regards to the Patent Owner's Response, and provided a time period of 30 days to make specified corrections.

STATUTES, REGULATIONS, AND PATENT EXAMINING PROCEDURES

37 C.F.R. § 1.181 Petition to the Director

(f) The mere filing of a petition will not stay any period for reply that may be running against the application, nor act as a stay of other proceedings. Any petition under this part not filed within two months of the mailing date of the action or notice from which relief is requested may be dismissed as untimely, except as otherwise provided. This two-month period is not extendable.

DECISION

The Third Party Requestor ["petitioner"] argues in the petition that the Patent Owner's Response dated October 19, 2011 exceeds 50 pages in length and therefore should be refused consideration and/or stricken from the record.

Petition
As a procedural matter, the petition is treated as a petition under 37 CFR § 1.181.

A paper such as a the Patent Owner's Response Responses shall **not exceed** 50 pages in length, excluding amendments, appendices of claims, and reference materials such as prior art references. As noted in the petition the Patent Owner's Response exceeded the 50-page limit of 37 C.F.R. § 1.943(b). The Office agrees with the petitioner's determination and the Patent Owner's Response dated October 19, 2011 will **not** be given consideration in the proceedings. However, in response to the Office's Notice of Defective Paper dated November 23, 2011 the Patent Owner submitted a Corrected Patent Owner Response and serviced to the third Party Requestor, dated December 1, 2011, making the appropriate corrections and **not** exceeding the 50-page limit. The Office agrees with the Patent Owners determination that the response indeed does not exceed the 50-page limit, as is also required in the petition.

Therefore, based on the above determination the Petition is **dismissed as moot**. The Patent Owner's Response dated October 19, 2011 will **not** be considered by the Office. The Third Party Requestor will be provided an opportunity to submit Comments in response to the Patent Owner's response within 30 days from the service of the Patent Owner's Response dated December 1, 2011.

CONCLUSION

1. The petitions filed November 17, 2011, is **dismissed as moot**.

2. The most-recent Office action, as listed in the statement of facts herein, remains outstanding and the Third Party Requestor's comments are due as set forth in this Petition Decision.

3. Telephone inquiries related to this decision should be directed to Sudhanshu C. Pathak, Supervisory Patent Reexamination Examiner, at (571) 272-5509 or in his absence to the undersigned at (571) 272-0700.

Irem Yucel
Director, Central Reexamination Unit

UNITED STATES PATENT AND TRADEMARK OFFICE

UNITED STATES DEPARTMENT OF COMMERCE
United States Patent and Trademark Office
Address: COMMISSIONER FOR PATENTS
P.O. Box 1450
Alexandria, Virginia 22313-1450
www.uspto.gov

APPLICATION NO.	FILING DATE	FIRST NAMED INVENTOR	ATTORNEY DOCKET NO.	CONFIRMATION NO.
95/001,692	07/19/2011	7,217,392	1205100-00731US3	3732

21005 7590 11/18/2011

HAMILTON, BROOK, SMITH & REYNOLDS, P.C.
530 VIRGINIA ROAD
P.O. BOX 9133
CONCORD, MA 01742-9133

EXAMINER	
ART UNIT	PAPER NUMBER

DATE MAILED: 11/18/2011

Please find below and/or attached an Office communication concerning this application or proceeding.

UNITED STATES PATENT AND TRADEMARK OFFICE

Commissioner for Patents
United States Patents and Trademark Office
P.O.Box 1450
Alexandria, VA 22313-1450
www.uspto.gov

DO NOT USE IN PALM PRINTER

THIRD PARTY REQUESTER'S CORRESPONDENCE ADDRESS
DAVID L. CAVANAUGH
WILMER HALE/ DC
1875 PENNSYLVANIA AVE N.W.
WASHINGTON, DC 20003

Date:

MAILED

NOV 18 2011

CENTRAL REEXAMINATION UNIT

Transmittal of Communication to Third Party Requester
Inter Partes Reexamination

REEXAMINATION CONTROL NO. : 95001692
PATENT NO. : 7217392
TECHNOLOGY CENTER : 3999
ART UNIT : 3991

Enclosed is a copy of the latest communication from the United States Patent and Trademark Office in the above identified Reexamination proceeding. 37 CFR 1.903.

Prior to the filing of a Notice of Appeal, each time the patent owner responds to this communication, the third party requester of the inter partes reexamination may once file written comments within a period of 30 days from the date of service of the patent owner's response. This 30-day time period is statutory (35 U.S.C. 314(b)(2)), and, as such, it cannot be extended. See also 37 CFR 1.947.

If an ex parte reexamination has been merged with the inter partes reexamination, no responsive submission by any ex parte third party requester is permitted.

All correspondence relating to this inter partes reexamination proceeding should be directed to the Central Reexamination Unit at the mail, FAX, or hand-carry addresses given at the end of the communication enclosed with this transmittal.

UNITED STATES PATENT AND TRADEMARK OFFICE

UNITED STATES DEPARTMENT OF COMMERCE
United States Patent and Trademark Office
Address: COMMISSIONER FOR PATENTS
P.O. Box 1450
Alexandria, Virginia 22313-1450
www.uspto.gov

APPLICATION NO.	FILING DATE	FIRST NAMED INVENTOR	ATTORNEY DOCKET NO.	CONFIRMATION NO.
95/001,613	05/03/2011	7,217,392	1205100-00731US1	2566

21005 7590 11/18/2011

HAMILTON, BROOK, SMITH & REYNOLDS, P.C.
530 VIRGINIA ROAD
P.O. BOX 9133
CONCORD, MA 01742-9133

EXAMINER	
ART UNIT	PAPER NUMBER

DATE MAILED: 11/18/2011

Please find below and/or attached an Office communication concerning this application or proceeding.

UNITED STATES PATENT AND TRADEMARK OFFICE

Commissioner for Patents
United States Patents and Trademark Office
P.O.Box 1450
Alexandria, VA 22313-1450
www.uspto.gov

DO NOT USE IN PALM PRINTER

THIRD PARTY REQUESTER'S CORRESPONDENCE ADDRESS
WILMERHALE / DC
1875 PENNSYLVANIA AVE., N.W.
WASHINGTON, DC 20006

Date:

MAILED

NOV 18 2011

CENTRAL REEXAMINATION UNIT

Transmittal of Communication to Third Party Requester
Inter Partes Reexamination

REEXAMINATION CONTROL NO. : 95001613
PATENT NO. : 7217392
TECHNOLOGY CENTER : 3999
ART UNIT : 3991

Enclosed is a copy of the latest communication from the United States Patent and Trademark Office in the above identified Reexamination proceeding. 37 CFR 1.903.

Prior to the filing of a Notice of Appeal, each time the patent owner responds to this communication, the third party requester of the inter partes reexamination may once file written comments within a period of 30 days from the date of service of the patent owner's response. This 30-day time period is statutory (35 U.S.C. 314(b)(2)), and, as such, it cannot be extended. See also 37 CFR 1.947.

If an ex parte reexamination has been merged with the inter partes reexamination, no responsive submission by any ex parte third party requester is permitted.

All correspondence relating to this inter partes reexamination proceeding should be directed to the Central Reexamination Unit at the mail, FAX, or hand-carry addresses given at the end of the communication enclosed with this transmittal.

UNITED STATES PATENT AND TRADEMARK OFFICE

Commissioner for Patents
United States Patent and Trademark Office
P.O. Box 1450
Alexandria, VA 22313-1450
www.uspto.gov

MAILED

NOV 18 2011

CENTRAL REEXAMINATION UNIT

Hamilton, Brook, Smith & Reynolds, P.C.
530 Virginia Road
P.O. Box 9133
Concord, Massachusetts 01742-9133

(For Patent Owner)

David L. Cavanaugh
Wilmer Hale/DC
1875 Pennsylvania Ave N.W.
Washington, DC 20006

(For 95/001,613 and
95/001,692 Requester)

In re Bogen et al.
Inter Partes Reexamination Proceeding
Control No.: 95/001,613
Filed: May 3, 2011
For: U.S. Patent No. 7,217,392 B2

In re Bogen et al.
Inter Partes Reexamination Proceeding
Control No.: 95/001,692
Filed: July 19, 2011
For: U.S. Patent No. 7,217,392 B2

DECISION, *SUA SPONTE*, TO MERGE REEXAMINATION PROCEEDINGS

The above-captioned reexamination proceedings are before the Office of Patent Legal Administration for *sua sponte* consideration of whether the proceedings should be merged under 37 CFR 1.989.

BACKGROUND

1. U.S. Patent No. 7,217,392 B2 ("the '392 patent") issued to Bogen et al. on May 15, 2007, with claims 1-8.

2. A request for *inter partes* reexamination of claims 1-8 of the '392 patent was filed on May 3, 2011, by a third party requester, and was assigned control number 95/001,613 ("the '1613 *inter partes* proceeding"). The request identified Leica Biosystems Melbourne Party Ltd. as the real party in interest.

3. A second request for *inter partes* reexamination of claims 1-8 of the '392 patent, assigned control number 95/001,692 ("the '1692 *inter partes* proceeding"), was filed on July 19, 2011, by the same third party requester, identifying Leica Biosystems Melbourne Party Ltd. as the real party in interest.

4. On July 21, 2011, *inter partes* reexamination was ordered for claims 1-8 of the '392 patent in the '1613 *inter partes* proceeding based on the examiner's determination that the May 3, 2011 request raised a substantial new question of patentability affecting these claims. The order was accompanied by a non-final Office action.

5. On September 20, 2011, patent owner submitted a response to the July 21, 2011 non-final action in the '1613 *inter partes* proceeding. The September 20, 2011 patent owner response did not include any amendment to the specification or claims.

6. On September 22, 2011, *inter partes* reexamination was ordered for claims 1-8 of the '392 patent in the '1692 *inter partes* proceeding based on the examiner's determination that the July 19, 2011 request raised a substantial new question of patentability affecting these claims. No Office action on the merits has been issued in the '1692 proceeding.

7. On October 20, 2011, requester filed comments to patent owner's September 20, 2011 response in the '1613 *inter partes* proceeding.

DECISION

I. MERGER OF PROCEEDINGS

Reexamination has been ordered in two proceedings for the same claims of the same patent. Both proceedings are *inter partes* proceedings. Both proceedings are still pending, and have not been terminated. Therefore, consideration of merger pursuant to 37 CFR 1.989 is ripe at this point in time.

37 CFR 1.989 provides:

> (a) If any reexamination is ordered while a prior *inter partes* reexamination proceeding is pending for the same patent and prosecution in the prior *inter partes* reexamination proceeding has not been terminated, a decision may be made to merge the two proceedings or to suspend one of the two proceedings. Where merger is ordered, the merged examination will normally result in the issuance and publication of a single reexamination certificate under § 1.997.

In accordance with 37 CFR 1.989(a), the 95/001,613, and 95/001,692 proceedings are merged. The merged proceeding will be conducted in accordance with the guidelines and requirements that follow.

II. THE SAME CLAIMS MUST BE MAINTAINED IN BOTH PROCEEDINGS

Presently, the claims (and specification) are identical in both files. Patent owner is required to continue to maintain the same claims (and specification) in both files *throughout the merged proceeding*.

III. CONDUCT OF MERGED PROCEEDING

A. Governing regulations for the merged proceeding:

The present decision merges two *inter partes* reexamination proceedings. The merged proceeding is governed by 37 CFR 1.902 through 1.997. Pursuant to 37 CFR 1.989(a), the merged examination will normally result in the issuance and publication of a single reexamination certificate under 37 CFR 1.997.

It is noted that reexamination was ordered for each of claims 1-8 of the '392 patent in each of the '1613 and '1692 proceedings. Accordingly, the examiner will conduct reexamination in the merged proceeding for claims 1-8 of the '392 patent.

B. *Inter partes* Third Party Requester Participation:

1. Comment rights:

Upon merger of proceedings, all *inter partes* requesters can comment pursuant to 35 U.S.C. 314(b)(2).[1] First, an *inter partes* requester's right to comment is contingent upon the patent owner responding to, or commenting on, an Office action. Second, an *inter partes* requester's right to comment is limited to issues raised in either the Office action or the patent owner's response to the action. Finally, the *inter partes* requester's comments must be submitted within 30 days from the date of service of the patent owner's response. No *inter partes* requester has a right to comment on any issue raised outside the confines of the statute, e.g., issues raised in a previous Office action (but not raised in the most recent Office action or response) or the request and comments from another requester. Requester comments must be submitted within the statutory time period of 30 days from date of service of patent owner's response.

2. Appeal Rights:

A discussion of third party requester's appeal rights can be found in section G below.

C. Papers mailed/filed:

All papers mailed by the Office throughout the merged proceeding will take the form of a single action which applies to both proceedings. All papers issued by the Office, or filed by the patent owner and the third party requester(s), will contain the identifying data for both proceedings and will be entered in each reexamination file. All papers filed by the patent owner and the third party requester(s) must consist of a single paper, **filed in duplicate**, each bearing a signature and identifying data for both proceedings, for entry into each file.

---

[1] Each time that the patent owner files a response to an action on the merits from the United States Patent and Trademark Office ("Office"), the third-party requester shall have one opportunity to file written comments addressing issues raised by the action of the Office or the patent owner's response thereto, if those written comments are received by the Office within 30 days after the date of service of the patent owner's response.

All papers filed by the patent owner and the third party requester(s) should be directed:

by Mail to: Attn: Mail Stop "*Inter Partes* Reexam"
Central Reexamination Unit
Commissioner for Patents
P.O. Box 1450
Alexandria, VA 22313-1450

by FAX to: (571) 273-9900
Central Reexamination Unit

by Hand to: Customer Service Window
Attn: Central Reexamination Unit
Randolph Building, Lobby Level
401 Dulany Street
Alexandria, VA 22314

by EFS: Registered users may submit papers via the electronic filing system EFS-Web, at:

https://efs.uspto.gov/efile/myportal/efs-registered

Patent owner and requesters are reminded that every paper filed in the merged proceeding subsequent to this decision must be served on the other parties, and every paper filed must reflect that such paper was served on the other parties, pursuant to 37 CFR 1.903. All papers are to be addressed to the Central Reexamination Unit as provided above.

D. Amendments:

The filing of any amendments to the specification, claims, or drawings must comply with 37 CFR 1.943, which incorporates the provisions of 37 CFR 1.530 and the guidelines of MPEP § 2666.01, which in turn references the guidelines of MPEP § 2250.

37 CFR 1.121 does not apply to amendments in reexamination. Accordingly, clean copies of the amended claims are not required and are not to be submitted; rather amendments are to be presented via markings pursuant to 37 CFR 1.530(f), except that a claim should be canceled by a statement canceling the claim, without presentation of the text of the claim.

Pursuant to 37 CFR 1.530(i), all amendments must be made relative to the patent specification, including the claims, and drawings, which are in effect as of the date of filing the request for reexamination. *Amendments are not to be made relative to previous amendments.* Thus, for all amendments, all words not appearing in the patent are always underlined, and only words being deleted from the patent appear in brackets.

E. Fees:

Where a paper is filed which requires payment of a fee (e.g., extension of time fee, excess claims fee, petition fee, appeal fee, brief fee, oral hearing fee), only a single fee need be paid. For example, only one fee need be paid for patent owner's appellant brief (or that of one of the *inter*

partes reexamination requesters) which may be filed, even though the brief relates to merged multiple proceedings, and copies must be filed (as pointed out above) for each file in the merged proceeding.

F. Citation of Patents and Printed Publications:

Upon return of the present merged proceeding to the examiner, the examiner will review the files to ensure that each file contains identical citations of prior patents and printed publications, and will cite such documents as are necessary as part of the next action in order to place the files in that condition.

G. Appeal Rights and Procedures for *Inter Partes* Reexamination

The *inter partes* reexamination procedures for taking appeal, and for participating in the patent owner's appeal, are explained in MPEP §§ 2674 through 2675 and 2678 through 2683.

With respect to a patent owner's notice of appeal, the appeal must only be taken from the rejection(s) of the claims in the Right of Appeal Notice (RAN) that the *patent owner* proposes to contest, and must identify each claim rejected by examiner that the patent owner intends to contest.

With respect to a third party requester's notice of appeal, the appeal must only be taken from the finding(s) of patentability of claims in the RAN that the *third party requester* proposes to contest. As set forth in MPEP § 2674, the third party requester must identify in the notice of appeal each rejection *that was previously proposed by third party requester* that the third party requester intends to contest and each rejection made and later withdrawn by the examiner that the third party requester intends to contest. It is not sufficient to merely appeal from the allowance of a claim (i.e., the examiner's finding of a claim patentable); the third party requester must identify each previously proposed rejection to be contested.

No new ground of rejection can be proposed by a third party requester appellant, unless such ground was withdrawn by the examiner during the prosecution of the proceeding, and the third party requester has not yet had an opportunity to propose it as a third party requester proposed ground of rejection. See 37 CFR 41.67(c)(1)(vi) as to the proposed rejections that a requester can challenge in the appellant brief.

CONCLUSION

1. *Inter partes* Reexamination Control No. 95/001,613 and *inter partes* Reexamination Control No. 95/001,692 are merged into a single proceeding, to be conducted in accordance with the procedure set forth above.

2. The examiner will issue an Office action for the merged proceeding in due course.

3. Any questions concerning this communication should be directed to Susy Tsang-Foster in the Office of Patent Legal Administration, at (571) 272-7711.

Pinchus M. Laufer
Senior Legal Advisor
Office of Patent Legal Administration

November 16, 2011

UNITED STATES PATENT AND TRADEMARK OFFICE

Commissioner for Patents
United States Patent and Trademark Office
P.O. Box 1450
Alexandria, VA 22313-1450
www.uspto.gov

MAILED

APR 16 2012

CENTRAL REEXAMINATION UNIT

Hamilton, Brook, Smith, Reynolds, P.C.
530 Virginia Road
P.O. Box 9133
Concord, MA 01742-9133

For Patent Owner

Wilmer, Cutler, Pickering, Hale and Dorr, LLP
1875 Pennsylvania, Avenue, N.W.
Washington, DC 20006

For 3rd Party Requester

Inter Partes Reexamination Proceeding
Control No. 95/001,613
Filed: May 3, 2011
For: US Patent No. 7,217,392

Inter Partes Reexamination Proceeding
Control No. 95/001,692
Filed: July 19, 2011
For: US Patent No. 7,217,392

DECISION ON
PETITION TO
CORRECT INVENTORSHIP
[37 CFR 1.324]

This is a decision on the petition filed September 20, 2011, to correct inventorship under 37 CFR 1.324 in US Patent No. 7,217,392, the patent that is subject to the instant reexamination proceeding. The petition seeks to remove John A. Purbrick as a listed inventor.

The petition is **granted** for the reasons set forth below.

Decision

37 CFR 1.324 states, in part:

> (a) Whenever through error a person is named in an issued patent as the inventor, or through error an inventor is not named in an issued patent and such error arose without any deceptive intention on his or her part, the Director, pursuant to 35 U.S.C. 256, may, on application of all parties and assignees,...issue a certificate naming only the actual inventor or inventors...

(b) Any request to correct inventorship of a patent pursuant to paragraph (a) of this section must be accompanied by:

(1) Where one or more persons are being added, a statement from each person who is being added as an inventor that the inventorship arose without any deceptive intention on his or her part;

(2) A statement from the current named inventors who have not submitted a statement under paragraph (b)(1) of this section either agreeing to the change of inventorship or stating that they have no disagreement in regard to the requested change;

(3) A statement from all assignees of the parties submitting a statement under paragraphs (b)(1) and (b)(2) of this section agreeing to the change of inventorship in the patent, which statement must comply with the requirements of § 3.73(b) of this chapter; and

(4) The fee set forth in § 1.2-0(b)."

The submitted petition includes items (2)-(3) required by 37 CFR 1.324. That is, the petition includes a statement from the current named inventors, Steven A. Bogen, Herbert H. Loeffler, and John A. Purbrick, as well as a statement from the current assignee, Dako Denmark A/S agreeing to the change of inventorship, namely, the removal of John A. Purbrick from the list of current named inventors.

The petition fee that is required by 37 CFR 1.20(b) was also received.

In view of the above, the request to correct inventorship in US Patent No. 7,229,436 is **granted**, and John A. Purbrick will be removed from the listed inventors.

The reexamination certificate that will ultimately issue as a result of this proceeding will contain the appropriate change of inventorship information consistent with the petition and this decision.

Any inquiries concerning this communication should be directed to Andres Kashnikow, Supervisory Patent Reexamination Specialist, at telephone number (571) 272-4361.

All correspondence relating to this *inter partes* reexamination should be directed as follows:

By EFS: See 37 CFR 1.8(a)(C)(ii)

By Mail to: Mail Stop *Inter Partes* Reexam
Central Reexamination Unit
Commissioner for Patents
United States Patent & Trademark Office
P. O. Box 1450
Alexandria, VA 22313-1450

By Fax to: (571) 273-9900
Central Reexamination Unit

By Hand: Customer Service Window
Randolph Building
401 Dulany Street
Alexandria, VA 22314

Andres Kashnikow
SPRS, CRU 3993
Central Reexamination Unit

UNITED STATES PATENT AND TRADEMARK OFFICE

Commissioner for Patents
United States Patent and Trademark Office
P.O. Box 1450
Alexandria, VA 22313-1450
www.uspto.gov

Hamilton, Brook, Smith, Reynolds, P.C.
530 Virginia Road
P.O. Box 9133
Concord, MA 01742-9133

: FOR PATENT OWNER

MAILED

APR 16 2012

CENTRAL REEXAMINATION UNIT

Wilmer, Cutler, Pickering, Hale and Dorr, LLP
1875 Pennsylvania Avenue, N.W.
Washington, D.C., 20006

: FOR THIRD PARTY REQUESTER

In re Bogen et al.
Reexamination Proceeding
Control No. : 95/001,613
Filed: May 3, 2011
Patent No. 7,217,392

In re Bogen et al.
Reexamination Proceeding
Control No. : 95/001,692
Filed: July 19, 2011
Patent No. 7,217,392

: AMENDED DECISION ON PETITIONS

This is an amended decision addressing patent owner's petition, filed November 30, 2011, under 37 CFR 1.182 to strike portions of requester's comments. This petition is being treated as a petition filed under 37 CFR 1.181 requesting supervisory review. This is also a decision on third party requester's opposition petition, filed December 20, 2011, in response to patent owner's November 30, 2011 petition.

In a decision mailed January 24, 2012, only patent owner's petition filed November 30, 2011 was addressed. Third party requester's opposition petition filed December 20, 2011 was not addressed. Further, the decision of January 24, 2012 was directed only to the file of reexamination proceeding control No. 95/001,613 rather than to proceeding control No. 95/001,613 and 95/001,692, which proceedings are merged per decision mailed November 18, 2011.

The petition is before the Group Director of the Central Reexamination Unit for decision.

SUMMARY

Patent owner's petition and third party requester's petition are DISMISSED as premature for the reasons set forth below, without consideration of the merits.

Brief Statement of Relevant Facts

1. Patent No. 7,217,392 (the '392 patent) issued on May 15, 2007.

2. A request for *inter partes* reexamination, assigned Control No. 95/001,613 (the '613 proceeding), was filed by third party requester on May 3, 2011.

3. A second request for *inter partes* reexamination, assigned Control No. 95/001,692 (the '692 proceeding), was filed by third party requester on July 19, 2011.

4. Reexamination was ordered in the '613 reexamination proceeding on July 21, 2011 and a non-final Office action was mailed on even date.

5. Reexamination was ordered in the '692 reexamination proceeding on September 22, 2011.

6. Patent owner filed a response to the non-final Office action on September 20, 2011. Accompanying the response was the petition for correction of inventorship pursuant to 37 CFR 1.530(I)(1) and 37 CFR 1.324.

7. In the '613 proceeding, third party requester filed a response to patent owner's response on October 20, 2011.

8. On November 18, 2011, a decision merging the '613 proceeding with the '692 proceeding was mailed.

9. On November 30, 2011, patent owner filed the instant petition under 37 CFR 1.182 to strike portions of requester's comments (filed with the October 20, 2011 response).

10. On December 20, 2011, third party requester filed the instant opposition petition to patent owner's petition under 37 CFR 1.182.

DISCUSSION

Patent owner requests the Office to strike portions of third party requester's October 20, 2011 submission relating to comments regarding a Board of Patent Appeals and Interferences (BPAI) decision in an unrelated patent application. Third party requester argues that the BPAI decision responds directly to issues raised by the patent owner in

the response and should not be excluded. Third party requester also argues that the obviousness issue decided in the BPAI decision is essentially the same as the obviousness issues raised in the '613 and the '692 proceedings.

The request to review the comments filed with third party requester's October 20, 2011 submission is dismissed as premature.

Statement of Relevant Authority

37 CFR 1.181(f) states:

> The mere filing of a petition will not stay any period for reply that may be running against the application, nor act as a stay of other proceedings. Any petition under this part not filed within **two months** of the mailing date of the action or notice from which relief is requested may be dismissed as untimely, except as otherwise provided. **This two-month period is not extendable.** (Emphasis added.)

DECISION

Patent owner brings before the Office a petition under 37 CFR § 1.181 to strike portions of third party requester's October 20, 2011 submission relating to comments regarding a BPAI decision in an unrelated patent application. Patent owner filed the petition on November 30, 2011 and third party requester filed the opposition petition on December 20, 2011. However, there has been no decision by the examiner to either enter or not enter third party requester's submission of October 20, 2011. Accordingly, it is premature to invoke supervisory authority regarding entry or striking of third party requester's comments, because the examiner has not made his or her decision. Thus, the present petitions are premature, and they are dismissed.

CONCLUSION

1. Patent owner's petition dated November 30, 2011 and third party requester's opposition petition are dismissed as premature.

2. Telephone inquiries with regard to this decision should be directed to Andres Kashnikow, Supervisory Patent Examiner in the Central Reexamination Unit, Art Unit 3993, at (571) 272-4361.

Irem Yucel, Director
Central Reexamination Unit

UNITED STATES PATENT AND TRADEMARK OFFICE

Commissioner for Patents
United States Patent and Trademark Office
P.O. Box 1450
Alexandria, VA 22313-1450
www.uspto.gov

Hamilton, Brook, Smith, Reynolds, P.C.
530 Virginia Road
P.O. Box 9133
Concord, MA 01742-9133

: FOR PATENT OWNER

MAILED

APR 16 2012

CENTRAL REEXAMINATION UNIT

Wilmer, Cutler, Pickering, Hale and Dorr, LLP
1875 Pennsylvania Avenue, N.W.
Washington, D.C., 20006

: FOR THIRD PARTY REQUESTER

In re Bogen et al.
Reexamination Proceeding
Control No. : 95/001,613
Filed: May 3, 2011
Patent No. 7,217,392

In re Bogen et al.
Reexamination Proceeding
Control No. : 95/001,692
Filed: July 19, 2011
Patent No. 7,217,392

: **DECISION ON PETITION**

This is a decision addressing patent owner's petition under 37 CFR § 1.945, filed November 30, 2011, to amend drawings. This is also a decision on third party requester's opposition petition, filed December 20, 2011, in response to patent owner's November 30, 2011 petition.

The petition is before the Group Director of the Central Reexamination Unit for decision.

SUMMARY

Both patent owner's petition and third party requester's opposition petition are DISMISSED as unnecessary for the reasons set forth below, without consideration of the merits.

Brief Statement of Relevant Facts

1. Patent No. 7,217,392 (the '392 patent) issued on May 15, 2007.

2. A request for *inter partes* reexamination, assigned Control No. 95/001,613 (the '613 proceeding), was filed by third party requester on May 3, 2011.

3. A second request for *inter partes* reexamination, assigned Control No. 95/001,692 (the '692 proceeding), was filed by third party requester on July 19, 2011.

4. Reexamination was ordered in the '613 reexamination proceeding on July 21, 2011 and a non-final Office action was mailed on even date.

5. Reexamination was ordered in the '692 reexamination proceeding on September 22, 2011.

6. Patent owner filed a response to the non-final Office action in the '613 proceeding on September 20, 2011. Accompanying the response was the petition for correction of inventorship pursuant to 37 CFR 1.530(I)(1) and 37 CFR 1.324.

7. In the '613 proceeding, third party requester filed a response to patent owner's response on October 20, 2011.

8. On November 18, 2011, a decision merging the '613 proceeding with reexamination Control No. 95/001,692 was mailed.

9. On November 30, 2011, patent owner filed the instant petition under 37 CFR § 1.945 to amend drawings.

10. On December 20, 2011, third party requester filed the instant opposition petition to patent owner's petition of November 30, 2011 under 37 CFR § 1.945.

Discussion

Patent owner presents a petition under 37 CFR § 1.945, filed November 30, 2011, to amend the drawings. Patent owner states that the drawings amendment is submitted to correct an unintentional drafting error in Figures 14A and 14B of the '392 patent. Third party requester presents an opposition petition to patent owner's petition under 37 CFR § 1.945, filed December 20, 2011. Third party requester argues that the patent owner seeks to change the patent itself and not any error in a paper responsive to and Office action, that there is no reason why the error could not have been corrected earlier and that there is no compelling reason why the drawings should be changed.

The petition is dismissed as unnecessary.

Statement of Relevant Authority

37 CFR § 1.945(b) states:

> Any supplemental response to the Office action will be entered only where the supplemental response it accompanied by a showing of sufficient cause why the supplemental response should be entered. The showing of sufficient cause must include:
>
> (1) an explanation of how the requirements of § 1.111(a)(2)(i) are satisfied;
>
> (2) an explanation of why the supplemental response was not presented together with the original response to the Office action; and
>
> (3) a compelling reason to enter the supplemental response.

Decision

Patent owner brings before the Office a petition under 37 CFR § 1.945, filed November 30, 2011, to amend drawings. 37 CFR § 1.945 clearly sets forth the requirements for entry of a supplemental response to an Office action. These requirements do not include the obligation to file a petition. Supplemental responses are considered by the examiner according to the requirements of 37 CFR § 1.945. A petition is therefore not required.

Therefore, the petition is dismissed as unnecessary. As the third party requester's opposition petition goes to the same issues, it is likewise dismissed as unnecessary.

CONCLUSION

1. Patent owner's petition under 37 CFR § 1.945, filed November 30, 2011 and third party requester's opposition petition to patent owner's petition under 37 CFR § 1.945, filed December 20, 2011, are **dismissed** as unnecessary for the reasons discussed above.

2. The present *inter parte* reexamination proceeding is being forwarded to the examiner for further consideration on the merits.

3. Telephone inquiries related to this decision should be directed to Andres Kashnikow, Supervisory Patent Examiner, at (571) 272-4361.

Irem Yucel, Director
Central Reexamination Unit

UNITED STATES PATENT AND TRADEMARK OFFICE

UNITED STATES DEPARTMENT OF COMMERCE
United States Patent and Trademark Office
Address: COMMISSIONER FOR PATENTS
P.O. Box 1450
Alexandria, Virginia 22313-1450
www.uspto.gov

APPLICATION NO.	FILING DATE	FIRST NAMED INVENTOR	ATTORNEY DOCKET NO.	CONFIRMATION NO.
95/001,695	07/22/2011	7529465	027639.0027-US03	8600

22850 7590 11/30/2011

OBLON, SPIVAK, MCCLELLAND MAIER & NEUSTADT, L.L.P.
1940 DUKE STREET
ALEXANDRIA, VA 22314

EXAMINER	
ART UNIT	PAPER NUMBER

DATE MAILED: 11/30/2011

Please find below and/or attached an Office communication concerning this application or proceeding.

UNITED STATES PATENT AND TRADEMARK OFFICE

Commissioner for Patents
United States Patents and Trademark Office
P.O.Box 1450
Alexandria, VA 22313-1450
www.uspto.gov

DO NOT USE IN PALM PRINTER

THIRD PARTY REQUESTER'S CORRESPONDENCE ADDRESS

Andrea G. Reister
COVINGTON & BURLING, LLP
1201 Pennsylvania Ave., N.W.
Washington, DC 20004-2401

Date: 11-30-11

Transmittal of Communication to Third Party Requester
Inter Partes Reexamination

REEXAMINATION CONTROL NO. : 95001695
PATENT NO. : 7529465
TECHNOLOGY CENTER : 3999
ART UNIT : 3992

Enclosed is a copy of the latest communication from the United States Patent and Trademark Office in the above identified Reexamination proceeding. 37 CFR 1.903.

Prior to the filing of a Notice of Appeal, each time the patent owner responds to this communication, the third party requester of the inter partes reexamination may once file written comments within a period of 30 days from the date of service of the patent owner's response. This 30-day time period is statutory (35 U.S.C. 314(b)(2)), and, as such, it cannot be extended. See also 37 CFR 1.947.

If an ex parte reexamination has been merged with the inter partes reexamination, no responsive submission by any ex parte third party requester is permitted.

All correspondence relating to this inter partes reexamination proceeding should be directed to the Central Reexamination Unit at the mail, FAX, or hand-carry addresses given at the end of the communication enclosed with this transmittal.

Decision on Petition for Extension of Time in Reexamination	Control No.: 95/001,695

1. THIS IS A DECISION ON THE PETITION FILED 18 November 2011.

2. THIS DECISION IS ISSUED PURSUANT TO:
   A. ☐ 37 CFR 1.550(c) – The time for taking any action by a patent owner in an *ex parte* reexamination proceeding will be extended only for sufficient cause and for a reasonable time specified.
   B. ☒ 37 CFR 1.956(c) – The time for taking any action by a patent owner in an *inter partes* reexamination proceeding will be extended only for sufficient cause and for a reasonable time specified.

   The petition is before the Central Reexamination Unit for consideration.

3. TIME REQUESTED
   The amount of time requested is six (6) weeks. This would be the first extension of time to respond to the Office action. Second or subsequent requests for extensions of time or requests for more than 1 month will be granted only in extraordinary situations. See MPEP 2265 and 2665

4. FORMAL MATTERS
   Patent owner petitioner requests that the period for response be extended by the amount of time stated above for responding to the Office action mailed on 20 October 2011, which sets a two (2) month period for filing a response thereto.
   A. ☒ Petition fee per 37 CFR §1.17(g)):
      i. ☒ Petition includes authorization to debit a deposit account.
      ii. ☐ Petition includes authorization to charge a credit card account.
      iii. ☐ Other: _____.
   B. ☒ Proper certificate of service was provided. (Not required in reexamination where patent owner is requester.)
   C. ☒ Petition was timely filed.
   D. ☐ Petition properly signed.

5. DECISION (See MPEP 2265 and 2665)
   A. ☐ Granted or ☒ Granted-in-part for one (1) month, because petitioner properly provided a factual accounting that is deemed to establish reasonably diligent behavior by all those responsible for preparing a response within the statutory time period and petitioner explained why, in spite of the action taken thus far, the requested additional time is needed.
      ☐ Other/comment: _____.
   B. ☐ Dismissed because:
      i. ☐ Formal matters (See unchecked box(es) (A, B, C and/or D) in section 4 above).
      ii. ☐ Petitioner failed to provide a factual accounting of reasonably diligent behavior by all those responsible for preparing a response to the outstanding Office action within the statutory time period.
      iii. ☐ Petitioner failed to explain why, in spite of the action taken thus far, the requested additional time is needed.
      iv. ☐ The petition is moot.
      v. ☐ Other/comment: _____.

6. CONCLUSION

   Telephone inquiries with regard to this decision should be directed to Mark Reinhart at 571-272-1611. In his/her absence, calls may be directed to Sudhanshu Pathak, at 571-272-5509 in the Central Reexamination Unit.

/Mark Reinhart/	Supervisory Patent Reexamination Specialist
[*Signature*]	(Title)

UNITED STATES PATENT AND TRADEMARK OFFICE

UNITED STATES DEPARTMENT OF COMMERCE
United States Patent and Trademark Office
Address: COMMISSIONER FOR PATENTS
P.O. Box 1450
Alexandria, Virginia 22313-1450
www.uspto.gov

APPLICATION NO.	FILING DATE	FIRST NAMED INVENTOR	ATTORNEY DOCKET NO.	CONFIRMATION NO.
95/001,696	07/22/2011	7493015	027639.0026-US03	8651

22850 7590 11/30/2011

OBLON, SPIVAK, MCCLELLAND MAIER & NEUSTADT, L.L.P.
1940 DUKE STREET
ALEXANDRIA, VA 22314

EXAMINER	
ART UNIT	PAPER NUMBER

DATE MAILED: 11/30/2011

Please find below and/or attached an Office communication concerning this application or proceeding.

UNITED STATES PATENT AND TRADEMARK OFFICE

Commissioner for Patents
United States Patents and Trademark Office
P.O.Box 1450
Alexandria, VA 22313-1450
www.uspto.gov

DO NOT USE IN PALM PRINTER

THIRD PARTY REQUESTER'S CORRESPONDENCE ADDRESS

Andrea G. Reister
COVINGTON & BURLING, LLP
1201 Pennsylvania Ave., NW
Washington, DC 20004-2401

Date: 11-30-11

Transmittal of Communication to Third Party Requester
Inter Partes Reexamination

REEXAMINATION CONTROL NO. : 95001696
PATENT NO. : 7493015
TECHNOLOGY CENTER : 3999
ART UNIT : 3992

Enclosed is a copy of the latest communication from the United States Patent and Trademark Office in the above identified Reexamination proceeding. 37 CFR 1.903.

Prior to the filing of a Notice of Appeal, each time the patent owner responds to this communication, the third party requester of the inter partes reexamination may once file written comments within a period of 30 days from the date of service of the patent owner's response. This 30-day time period is statutory (35 U.S.C. 314(b)(2)), and, as such, it cannot be extended. See also 37 CFR 1.947.

If an ex parte reexamination has been merged with the inter partes reexamination, no responsive submission by any ex parte third party requester is permitted.

All correspondence relating to this inter partes reexamination proceeding should be directed to the Central Reexamination Unit at the mail, FAX, or hand-carry addresses given at the end of the communication enclosed with this transmittal.

Decision on Petition for Extension of Time in Reexamination	Control No.: 95/001,696

1. THIS IS A DECISION ON THE PETITION FILED 18 November 2011.

2. THIS DECISION IS ISSUED PURSUANT TO:
   A. ☐ 37 CFR 1.550(c) – The time for taking any action by a patent owner in an *ex parte* reexamination proceeding will be extended only for sufficient cause and for a reasonable time specified.
   B. ☒ 37 CFR 1.956(c) – The time for taking any action by a patent owner in an *inter partes* reexamination proceeding will be extended only for sufficient cause and for a reasonable time specified.

   The petition is before the Central Reexamination Unit for consideration.

3. TIME REQUESTED
   The amount of time requested is six (6) weeks. This would be the first extension of time to respond to the Office action. Second or subsequent requests for extensions of time or requests for more than 1 month will be granted only in extraordinary situations. See MPEP 2265 and 2665

4. FORMAL MATTERS
   Patent owner petitioner requests that the period for response be extended by the amount of time stated above for responding to the Office action mailed on 20 October 2011, which sets a two (2) month period for filing a response thereto.
   A. ☒ Petition fee per 37 CFR §1.17(g)):
      i. ☒ Petition includes authorization to debit a deposit account.
      ii. ☐ Petition includes authorization to charge a credit card account.
      iii. ☐ Other: _____.
   B. ☒ Proper certificate of service was provided. (Not required in reexamination where patent owner is requester.)
   C. ☒ Petition was timely filed.
   D. ☐ Petition properly signed.

5. DECISION (See MPEP 2265 and 2665)
   A. ☐ Granted or ☒ Granted-in-part for one (1) month, because petitioner properly provided a factual accounting that is deemed to establish reasonably diligent behavior by all those responsible for preparing a response within the statutory time period and petitioner explained why, in spite of the action taken thus far, the requested additional time is needed.
      ☐ Other/comment: _____.
   B. ☐ Dismissed because:
      i. ☐ Formal matters (See unchecked box(es) (A, B, C and/or D) in section 4 above).
      ii. ☐ Petitioner failed to provide a factual accounting of reasonably diligent behavior by all those responsible for preparing a response to the outstanding Office action within the statutory time period.
      iii. ☐ Petitioner failed to explain why, in spite of the action taken thus far, the requested additional time is needed.
      iv. ☐ The petition is moot.
      v. ☐ Other/comment: _____.

6. CONCLUSION

   Telephone inquiries with regard to this decision should be directed to Mark Reinhart at 571-272-1611. In his/her absence, calls may be directed to Sudhanshu Pathak, at 571-272-5509 in the Central Reexamination Unit.

/Mark Reinhart/	Supervisory Patent Reexamination Specialist
[*Signature*]	(Title)

UNITED STATES PATENT AND TRADEMARK OFFICE

UNITED STATES DEPARTMENT OF COMMERCE
United States Patent and Trademark Office
Address: COMMISSIONER FOR PATENTS
P.O. Box 1450
Alexandria, Virginia 22313-1450
www.uspto.gov

APPLICATION NO.	FILING DATE	FIRST NAMED INVENTOR	ATTORNEY DOCKET NO.	CONFIRMATION NO.
95/001,697	07/25/2011	Edward Colby Munger	41484-80130	2161

23630 7590 12/01/2011

McDermott Will & Emery
600 13th Street, NW
Washington, DC 20005-3096

EXAMINER	
ART UNIT	PAPER NUMBER

DATE MAILED: 12/01/2011

Please find below and/or attached an Office communication concerning this application or proceeding.

UNITED STATES PATENT AND TRADEMARK OFFICE

Commissioner for Patents
United States Patents and Trademark Office
P.O.Box 1450
Alexandria, VA 22313-1450
www.uspto.gov

DO NOT USE IN PALM PRINTER

THIRD PARTY REQUESTER'S CORRESPONDENCE ADDRESS

SIDLEY AUSTIN LLP
717 NORTH HARWOOD
SUITE 3400
DALLAS, TX 75201

Date:

Transmittal of Communication to Third Party Requester
Inter Partes Reexamination

REEXAMINATION CONTROL NO. : 95001697
PATENT NO. : 7490151
TECHNOLOGY CENTER : 3999
ART UNIT : 3992

Enclosed is a copy of the latest communication from the United States Patent and Trademark Office in the above identified Reexamination proceeding. 37 CFR 1.903.

Prior to the filing of a Notice of Appeal, each time the patent owner responds to this communication, the third party requester of the inter partes reexamination may once file written comments within a period of 30 days from the date of service of the patent owner's response. This 30-day time period is statutory (35 U.S.C. 314(b)(2)), and, as such, it cannot be extended. See also 37 CFR 1.947.

If an ex parte reexamination has been merged with the inter partes reexamination, no responsive submission by any ex parte third party requester is permitted.

All correspondence relating to this inter partes reexamination proceeding should be directed to the Central Reexamination Unit at the mail, FAX, or hand-carry addresses given at the end of the communication enclosed with this transmittal.

UNITED STATES PATENT AND TRADEMARK OFFICE

Commissioner for Patents
United States Patent and Trademark Office
P.O. Box 1450
Alexandria, VA 22313-1450
www.uspto.gov

Toby H. Kusmer : (For Patent Owner)
McDERMOTT WILL & EMERY LLP :
28 State Street 34th, Floor :
Boston, MA. 02109-1775 :

MAILED

DEC 01 2011

CENTRAL REEXAMINATION UNIT

Jeffrey P. Kushan :
SIDLEY AUSTIN LLP : (For Third Party
1501 K Street N.W. : Requester)
Washington, D.C. 20005 :

In re: Munger et al. :
Inter Partes Reexamination Proceeding : DECISION ON PETITIONS
Control No.: 95/001,697 :
For: U.S. Patent No.: 7,490,151 :

This is a decision on two petitions filed by the patent owner: a petition filed on November 7th, 2011, entitled "PETITION TO VACATE *INTER PARTES* REEXAMINATION" [hereinafter "petition 1"], and a petition filed by Third Party Requestor on November 21st, 2011, entitled "PETITION IN OPPOSITION TO PATENT OWNER'S PETITION TO VACATE *INTER PARTES* REEXAMINATION DETERMINATION ON CERTAIN PRIOR ART" [hereinafter "petition 2"].

Petition 1 is treated as a petition under 37 CFR § 1.181. Petition 2 is treated also as a petition under 37 CFR § 1.181 as a submission in opposition to Petition 1.

The petitions are before the Director of the Central Reexamination Unit. The petition 1 is denied and petition 2 is dismissed as moot.

REVIEW OF RELEVANT FACTS

- U.S. Patent No. 7,490,151 issued on February 10th, 2009.
- A request for *inter partes* reexamination was filed on July 25th, 2011 and assigned control no. 95/001,697.

- *Inter partes* reexamination was ordered on October 21st, 2011.
- Petition 1 was filed November 7th, 2011, and petition 2 was filed November 21st, 2011.

STATUTES, REGULATIONS, AND PATENT EXAMINING PROCEDURES

37 C.F.R. § 1.181 Petition to the Director

(a) Petition may be taken to the Director:
(1) From any action or requirement of any examiner in the ex parte prosecution of an application, or in ex parte or inter partes prosecution of a reexamination proceeding which is not subject to appeal to the Board of Patent Appeals and Interferences or to the court.

MPEP § 2646 (II) PETITION TO VACATE THE ORDER GRANTING REEXAMINATION

When a petition under 37 CFR 1.181 is filed to vacate a reexamination order, the third party requester may file a single submission in opposition to the petition.

DECISION

Patent owner ["petitioner"] argues in petition 1 that the Office vacate the finding that the Bingo reference submitted by the third party requestor raises substantial new questions of patentability ("SNQ")2 of claims 1-16 because the record is devoid of evidence that Bingo is a patent or printed publication, more specifically Bingo's copyright date is not sufficient to establish Bingo as a publication constituting prior art under 35 U.S.C. § 102(a).

The Third Party Requester ["petitioner"] argues in petition 2 that the Patent Owner's November 7 Petition (petition 1) is improper under MPEP § 2646(II) and further provides evidence to substantiate the Bingo reference to be a patent or printed publication.

Petition 1

As a procedural matter, the petition was filed under 37 CFR § 1.181, which is reserved for action or requirement of any examiner in the ex parte prosecution of an application, or in ex parte or inter partes prosecution of a reexamination proceeding which is not subject to appeal to the Board of Patent Appeals and Interferences or to the court. However, the MPEP § 2646(II) "PETITION TO VACATE THE ORDER GRANTING REEXAMINATION" clearly states:

> "Where the examiner determines that a reference is a printed publication (i.e., that the criteria for publication has been satisfied), that determination is also **not** petitionable. These matters cannot be questioned with respect to vacating the order granting reexamination until a final agency decision on the reexamination proceeding has issued. Rather, these matters can be **argued** by the patent owner and **appealed** during the examination phase of the reexamination proceeding."

The Office considers petitions to vacate the order granting reexamination as not being properly filed under 37 CFR § 1.181. The petition is therefore **denied**.

Petition 2

Petitioner argues in petition 2 that Patent Owner's November 7 Petition (petition 1) is improper under MPEP § 2646(II) and further provides evidence to substantiate the Bingo reference to be a patent or printed publication. In light of the Office's decision with regards to Petition 1 (see above), the petition 2 is **dismissed as moot**.

CONCLUSION

1. The petition filed November 7th, 2011 is denied and the petition filed November 21st, 2011 is dismissed as moot.

2. The most-recent Office action (Order) dated October 21st, 2011, as listed in the statement of facts herein, remains outstanding and patent owner's response is due as set forth in that action.

3. Telephone inquiries related to this decision should be directed to Sudhanshu C. Pathak, Supervisory Patent Examiner, at (571) 272-5509 or in his absence to the undersigned at (571) 272-0700.

Irem Yücel
Director, Central Reexamination Unit

UNITED STATES PATENT AND TRADEMARK OFFICE

UNITED STATES DEPARTMENT OF COMMERCE
United States Patent and Trademark Office
Address: COMMISSIONER FOR PATENTS
P.O. Box 1450
Alexandria, Virginia 22313-1450
www.uspto.gov

APPLICATION NO.	FILING DATE	FIRST NAMED INVENTOR	ATTORNEY DOCKET NO.	CONFIRMATION NO.
95/001,697	07/25/2011	Edward Colby Munger	41484-80130	2161

23630 7590 03/15/2012

McDermott Will & Emery
600 13th Street, NW
Washington, DC 20005-3096

EXAMINER	
ART UNIT	PAPER NUMBER

DATE MAILED: 03/15/2012

Please find below and/or attached an Office communication concerning this application or proceeding.

UNITED STATES PATENT AND TRADEMARK OFFICE

Commissioner for Patents
United States Patents and Trademark Office
P.O.Box 1450
Alexandria, VA 22313-1450
www.uspto.gov

DO NOT USE IN PALM PRINTER

THIRD PARTY REQUESTER'S CORRESPONDENCE ADDRESS

SIDLEY AUSTIN LLP
717 NORTH HARWOOD
SUITE 3400
DALLAS, TX 75201

Date:

Transmittal of Communication to Third Party Requester
Inter Partes Reexamination

REEXAMINATION CONTROL NO. : 95001697
PATENT NO. : 7490151
TECHNOLOGY CENTER : 3999
ART UNIT : 3992

Enclosed is a copy of the latest communication from the United States Patent and Trademark Office in the above identified Reexamination proceeding. 37 CFR 1.903.

Prior to the filing of a Notice of Appeal, each time the patent owner responds to this communication, the third party requester of the inter partes reexamination may once file written comments within a period of 30 days from the date of service of the patent owner's response. This 30-day time period is statutory (35 U.S.C. 314(b)(2)), and, as such, it cannot be extended. See also 37 CFR 1.947.

If an ex parte reexamination has been merged with the inter partes reexamination, no responsive submission by any ex parte third party requester is permitted.

All correspondence relating to this inter partes reexamination proceeding should be directed to the Central Reexamination Unit at the mail, FAX, or hand-carry addresses given at the end of the communication enclosed with this transmittal.

UNITED STATES PATENT AND TRADEMARK OFFICE

Commissioner for Patents
United States Patent and Trademark Office
P.O. Box 1450
Alexandria, VA 22313-1450
www.uspto.gov

MCDERMOTT WILL & EMERY
600 13TH STREET, NW
WASHINGTON, DC 20005-3096

(For Patent Owner)

MAILED

MAR 15 2012

CENTRAL REEXAMINATION UNIT

HAYNES AND BOONE, LLP
IP SECTION
2323 VICTORY AVENUE
SUITE 700
DALLAS, TX 75219

(For the '1714 Requester)

Inter Partes Reexamination Proceeding
Control No. 95/001,714
Filed: August 16, 2011
For: U.S. Patent No. 7,490,151

DECISION DIMISSING PETITION

This is a decision on patent owner's "PETITION TO SUSPEND AND NOT MERGE *INTER PARTES* REEXAMINATION" ("the petition under 37 CFR 1.182"), filed on November 9, 2011. This decision also addresses third party requester's "PETITION UNDER 1.182 TO OPPOSE PATENT OWNER'S PETITION TO SUSPEND AND NOT MERGE" ("the opposition"), filed on November 18, 2011.

The patent owner petition under 37 CFR 1.182 is dismissed for the reasons set forth herein.

BACKGROUND

1. On February 10, 2009, U.S. Patent No. 7,490,151 (the '151 patent) issued to Munger et al. with 16 claims.

2. On July 25, 2011, a first request for *inter partes* reexamination of claims 1-16 of the '151 patent was filed by a third party requester and assigned Reexamination Control No. 95/001,697 ("the '1697 proceeding"). The request identified Apple Inc., ("the '1697 requester", also referred to herein as "Apple") as the real party in interest.

3. On August 16, 2011, a second request for *inter partes* reexamination of claims 1-16 of the '151 patent was filed by a third party requester and assigned Reexamination Control No. 95/001,714 ("the '1714 proceeding"). The request identified Cisco Systems, Inc. ("the '1714 requester", also referred to herein as "Cisco") as the real party in interest.

4. On October 21, 2011, *inter partes* reexamination was ordered on claims 1-16 of the '151 patent in the '1697 proceeding. An Office action was not concurrently issued in the proceeding. The order indicated that an Office action would issue in due course.

5. On October 31, 2011, *inter partes* reexamination was ordered on claims 1-16 of the '151 patent in the '1714 proceeding. An Office action was not concurrently issued in the proceeding. The order indicated that an Office action would issue in due course.

6. On November 9, 2011, patent owner filed the instant petition under 37 CFR 1.182 in the '1714 proceeding.

7. On November 18, 2011, the '1714 requester filed the instant opposition to the patent owner's petition under CFR 1.182 in the '1714 proceeding.

8. To date, no Office action has issued in either the '1697 or the '1714 *inter partes* proceeding.

9. A decision *sua sponte* merging the '1697 and '1714 proceedings is being mailed on even date herewith.

DECISION

I. Patent owner's petition under 37 CFR 1.182

In the instant petition under 37 CFR 1.182, patent owner (also referred to herein as "VirnetX") requests that the Office suspend the '1714 proceeding "because it appears that Cisco initiated a second *inter partes* reexamination of the '151 patent soon after Apple to harass VirnetX."[1] In particular, patent owner asserts that, as co-defendants in concurrent district court litigation initiated by patent owner, "[b]oth Cisco and Apple ... were clearly aware of at least some of the prior art now asserted by Cisco in its request for reexamination."[2] Additionally, patent owner asserts that "Apple filed its request for reexamination, before Cisco, relying on six references totally different from those it identified with Cisco in the district court litigation," and that "Cisco appears to have waited for Apple to file its request for reexamination before initiating a second reexamination of the '151 patent relying primarily on the references Cisco and Apple jointly identified in the district court litigation."[3] Accordingly, patent owner asserts that "[t]hese facts appear to suggest that Cisco and Apple ... chose not to assert all the prior art they were aware of in district court but instead chose to file two separate *inter partes* reexaminations within a few days of each other to harass VirnetX," such that suspension of the '1714 proceeding is appropriate pursuant to MPEP 2640(II)(A).[4]

---

[1] Petition under 37 CFR 1.182 at page 3.
[2] Id. at page 4.
[3] Id.
[4] Id.

In the alternative, patent owner requests that the Office not merge the "Apple-initiated" '1697 proceeding and the "Cisco-initiated" '1714 proceeding.[5] Patent owner also requests, should the Office merge the '1697 and the '1714 proceedings, that the Office "instruct Cisco and Apple that each may only comment on and participate in an appeal from only those issues that it raised in its own request for reexamination."[6]

II. The '1714 requester's opposition

In the instant opposition, third party requester asserts that patent owner's petition under 37 CFR 1.182 is an unauthorized paper in the '1714 proceeding under 37 CFR 1.939(b) because it was filed prior to the initial Office action on the merits.[7] Additionally, the '1714 requester asserts that the patent owner's petition under 37 CFR 1.182 is improper under 37 CFR 1.4(c) because it combines three separate matters into a single petition.[8]

Further, the '1714 requester asserts that, should the Office consider the merits of the patent owner's petition to suspend the '1714 proceeding, the petition should be denied because the petition "is simply devoid of any evidence, explanation or analysis to support the allegation of harassment."[9] In particular, the '1714 requester asserts that "[t]he Patent Owner's petition effectively suggests that only one defendant at a time may pursue inter partes reexamination of a patent in litigation," and that "such a policy would run counter to the reexamination statutes, which permit '***Any*** third-party requester at any time may file a request for inter partes reexamination.'"[10] Further, the '1714 requester asserts that "if the Patent Office were to suspend the present proceeding until completion of the reexamination initiated by Apple, it could have the effect of denying Cisco of its opportunity to challenge the '151 patent's validity in reexamination."[11]

Regarding patent owner's request for no merger of the '1697 and the '1714 proceedings, contrary to patent owner's assertion that "conducting two separate reexamination proceedings would assist the Patent Office in fulfilling its mandate for 'special dispatch,'" the '1714 requester asserts that "consolidating the issues into a single merged proceeding is likely to make the most efficient use of the Office's resources."[12] Finally, the '1714 requester asserts that the patent owner's request regarding the comment rights of the third party requesters of a merged proceeding is contrary to 35 USC 314(b)(2), "which provides the third-party requester with 'one opportunity to file written comments addressing issues raised by the action of the Office of the patent owner's response thereto.'"[13]

---

[5] Id. at page 5.
[6] Id. at page 6.
[7] Opposition at pages 2-3.
[8] Id. at pages 3-4.
[9] Id. at page 4.
[10] Id. at page 5 (citing 35 USC 311(a)).
[11] Id.
[12] Id. at page 6.
[13] Id.

III. Findings and Analysis

In the instant petition under 37 CFR 1.182, patent owner requests suspension of the '1714 proceeding on the basis that the request for reexamination in the '1714 proceeding was filed for purposes of harassment. MPEP 2640(II)(A) provides, in-part (emphasis added):

> Where reexamination is granted on a second or subsequent request, but the patent owner can clearly show that the second or subsequent request was filed for purposes of harassment, the patent owner ***can petition*** under 37 CFR 1.182 that the second or subsequent request should be suspended. If such a petition is granted, prosecution on the second or subsequent reexamination would be suspended until conclusion of proceedings in the first reexamination. In such an instance, merger of the second (or subsequent) reexamination with the first would unduly prolong the conclusion of the pending reexamination and be inconsistent with the requirement that the reexamination proceeding be conducted with special dispatch.

As a preliminary matter, the instant patent owner petition under 37 CFR 1.182, requesting suspension of the '1714 proceeding on the basis that the '1714 proceeding was filed for purposes of harassment, is not an improper paper under 37 CFR 1.939. MPEP 2640(II)(A) expressly authorizes such petition can be filed where reexamination is granted in a proceeding which patent owner contends was filed for purposes of harassment.

Regarding the propriety of Cisco's request for reexamination of the '151 patent in the '1714 proceeding, 35 USC 311(a) provides that "[a]ny third-party requester at any time may file a request for inter partes reexamination by the Office of a patent on the basis of any prior art cited under the provisions of section 301."[14] Thus, Cisco is not precluded from filing a request for *inter partes* reexamination of the '151 where a co-defendant in concurrent infringement litigation initiated by patent owner already filed a request for *inter partes* reexamination of the '151 patent.[15] The filing of Cisco's request is permitted by the *inter partes* reexamination statutes and, therefore, on its face, does not clearly show harassment. Additionally, contrary to patent owner's assertion, the filing of Cisco's request for *inter partes* reexamination of the '151 patent in the '1714 proceeding less than one month after the filing of Apple's request in the '1697 proceeding should benefit patent owner by enabling patent owner to address all of the patentability issues raised in both requests together in a timely fashion. Under the facts and circumstances in this instance, it would be more efficient for both the patent owner and the Office to resolve the patentability issues raised in both requests together as opposed to, for example, had Cisco waited until the conclusion of Apple's '1697 proceeding to file its request in the '1714 proceeding.

---

[14] See also 37 CFR 1.913 (providing, "Except as provided for in § 1.907, any person other than the patent owner or its privies may, at any time during the period of enforceability of a patent which issued from an original application filed in the United States on or after November 29, 1999, file a request for *inter partes* reexamination by the Office of any claim of the patent on the basis of prior art patents or printed publications cited under § 1.501.").

[15] There are no allegations that any of the estoppel provisions would apply in this instance.

Further, MPEP 2642 provides that reexamination of a patent which has previously undergone a reexamination proceeding is permitted where the subsequent request independently provides an SNQ which is different from that raised in the pending reexamination for the claims in effect at the time of the determination.[16] This requirement, that a subsequent request for reexamination contain a new SNQ, provides a safeguard against harassment of the patent owner. As set forth in the October 21, 2011 order granting reexamination in the '1697 proceeding, the examiner has found that Apple's request in the '1697 proceeding for reexamination of the '151 patent raises SNQs, and as set forth in the October 31, 2011 order granting reexamination in the '1714 proceeding, the examiner has found that Cisco's request in the '1714 proceeding for reexamination of the '151 patent also raises SNQs. Whether Apple had been aware of the art that Cisco presented in its request in the '1714 proceeding at the time Apple filed its request in the '1697 proceeding does not clearly show Cisco's request was filed for purposes of harassment where both requests raised SNQs. Therefore, on this record, patent owner has not presented facts clearly showing that Cisco's request for *inter partes* reexamination of the '151 patent in the '1714 proceeding was filed for purposes of harassment and patent owner's November 9, 2011 petition under 37 CFR 1.182 is dismissed.

Patent owner's alternative request not to merge the '1697 and the '1714 proceedings is being treated as a notification of concurrent proceedings pursuant to 37 CFR 1.985(a) and MPEP 2686. As set forth in MPEP 2686.01(I), decisions to merger or not to merger co-pending reexamination proceedings is at the sole discretion of the Office:

> Where a second request for reexamination is filed and reexamination is ordered, and a first reexamination proceeding is pending, the proceedings will be merged where the Office (in its discretion) deems it appropriate to do so, to facilitate the orderly handling of the proceedings. However, a decision not to merge is within the sole discretion of the Office to facilitate/carry out the statutory mandate of 35 U.S.C. 314(c) to conduct reexamination proceedings with "special dispatch".

In this instance, the Office is exercising its discretion by mailing, on even date herewith, a decision *sua sponte* merging the '1697 and the '1714 proceedings. The merger decision explicitly sets forth the participation rights of the parties to the merged proceeding.

CONCLUSION

1. Patent owner's November 9, 2011 petition under 37 CFR 1.182 is dismissed.

---

[16] See MPEP 2642(I) (stating "However, in order for the second or subsequent request for reexamination to be granted, the second or subsequent requester must independently provide a substantial new question of patentability which is different from that raised in the pending reexamination for the claims in effect at the time of the determination. ... If a "different" substantial new question of patentability is not provided by the second or subsequent request for the claims in effect at the time of the determination, the second or subsequent request for reexamination must be denied since the Office is only authorized by statute to grant a reexamination proceeding based on a substantial new question of patentability "affecting any claim of the patent." See 35 U.S.C. 312. Accordingly, there must be at least one substantial new question of patentability established for the existing claims in the patent in order to grant reexamination.).

2. Telephone inquiries related to the present decision should be directed to Nicole D. Haines, Legal Advisor, at 571-272-7717 or to the undersigned at 571-272-7726.

Pinchus M. Laufer
Senior Legal Advisor
Office of Patent Legal Administration

March 14, 2012

cc: Finnegan, Henderson, Farabow, Garrett & Dunner LLP
901 New York Avenue, NW
Washington, DC 20001-4413

UNITED STATES PATENT AND TRADEMARK OFFICE

UNITED STATES DEPARTMENT OF COMMERCE
United States Patent and Trademark Office
Address: COMMISSIONER FOR PATENTS
P.O. Box 1450
Alexandria, Virginia 22313-1450
www.uspto.gov

APPLICATION NO.	FILING DATE	FIRST NAMED INVENTOR	ATTORNEY DOCKET NO.	CONFIRMATION NO.
95/001,697	07/25/2011	Edward Colby Munger	41484-80130	2161

23630 7590 03/15/2012

McDermott Will & Emery
600 13th Street, NW
Washington, DC 20005-3096

EXAMINER	
ART UNIT	PAPER NUMBER

DATE MAILED: 03/15/2012

Please find below and/or attached an Office communication concerning this application or proceeding.

UNITED STATES PATENT AND TRADEMARK OFFICE

Commissioner for Patents
United States Patents and Trademark Office
P.O.Box 1450
Alexandria, VA 22313-1450
www.uspto.gov

DO NOT USE IN PALM PRINTER

THIRD PARTY REQUESTER'S CORRESPONDENCE ADDRESS
SIDLEY AUSTIN LLP
717 NORTH HARWOOD
SUITE 3400
DALLAS, TX 75201

Date: MAILED
MAR 15 2012
CENTRAL REEXAMINATION UNIT

Transmittal of Communication to Third Party Requester
Inter Partes Reexamination

REEXAMINATION CONTROL NO. : 95001697
PATENT NO. : 7490151
TECHNOLOGY CENTER : 3999
ART UNIT : 3992

Enclosed is a copy of the latest communication from the United States Patent and Trademark Office in the above identified Reexamination proceeding. 37 CFR 1.903.

Prior to the filing of a Notice of Appeal, each time the patent owner responds to this communication, the third party requester of the inter partes reexamination may once file written comments within a period of 30 days from the date of service of the patent owner's response. This 30-day time period is statutory (35 U.S.C. 314(b)(2)), and, as such, it cannot be extended. See also 37 CFR 1.947.

If an ex parte reexamination has been merged with the inter partes reexamination, no responsive submission by any ex parte third party requester is permitted.

All correspondence relating to this inter partes reexamination proceeding should be directed to the Central Reexamination Unit at the mail, FAX, or hand-carry addresses given at the end of the communication enclosed with this transmittal.

UNITED STATES PATENT AND TRADEMARK OFFICE

Commissioner for Patents
United States Patent and Trademark Office
P.O. Box 1450
Alexandria, VA 22313-1450
www.uspto.gov

MCDERMOTT WILL & EMERY
600 13TH STREET, NW
WASHINGTON, DC 20005-3096

(For Patent Owner)

MAILED

MAR 15 2012

CENTRAL REEXAMINATION UNIT

SIDLEY AUSTIN LLP
717 NORTH HARWOOD
SUITE 3400
DALLAS, TX 75201

(For the '1697 Requester)

HAYNES AND BOONE, LLP
IP SECTION
2323 VICTORY AVENUE
SUITE 700
DALLAS, TX 75219

(For the '1714 Requester)

Inter Partes Reexamination Proceeding
Control No. 95/001,697
Filed: July 25, 2011
For: U.S. Patent No. 7,490,151

Inter Partes Reexamination Proceeding
Control No. 95/001,714
Filed: August 16, 2011
For: U.S. Patent No. 7,490,151

DECISION
SUA SPONTE
MERGING
REEXAMINATION
PROCEEDINGS

The above-captioned reexamination proceedings are before the Office of Patent Legal Administration for *sua sponte* consideration of whether the proceedings should be merged (consolidated) at this time.

PATENT OWNER'S ADDRESS

Different patent owner addresses are of record for the patent and the two reexamination proceedings. On November 1, 2011, patent owner filed, in the 95/001,714 proceeding, a "REVOCATION OF POWER OF ATTORNEY, STATEMENT UNDER 37 C.F.R. § 3.73(b), AND GRANT OF NEW POWER OF ATTORNEY FOR REEXAMINATION CONTROL NO. 95/001,714 ONLY" stating:

> The undersigned representative of the Assignee hereby grants its power of attorney to the patent practitioners associated with FINNEGAN, HENDERSON, FARABOW, GARRETT & DUNNER, L.L.P., Customer Number 22,852, to prosecute only reexamination proceeding with control no. 95/001,714 and to transact all business in the Patent and Trademark Office connected therewith. Power of attorney and tile mailing address for all other aspects of the '151 patent shall remain unchanged.
>
> Please send all future correspondence concerning reexamination proceeding with control no. 95/001,714 to Finnegan, Henderson, Farabow, Garrett & Dunner, L.L.P., Customer No. 22,852.

The patent owner's November 1, 2011 paper was not effective to change the correspondence address of record for the '1724 proceeding. See *Revisions and Technical Corrections Affecting Requirements for Ex Parte and Inter Partes Reexamination*, 72 Fed. Reg. 18892 (April 16, 2007) (final rule) (stating, "The correspondence address for any pending reexamination proceeding not having the same correspondence address as that of the patent is, by way of this revision to § 1.33(c), automatically changed to that of the patent file..."). The current correspondence address of record for the patent file is the proper patent owner address for reexamination mailings pursuant to 37 CFR 1.33(c), and it is that of McDermott Will & Emery, 600 13th Street, NW, Washington, DC 20005-3096.

Accordingly, all future correspondence will be directed to, and service on patent owner should also be directed to, McDermott Will & Emery, 600 13th Street, NW, Washington, DC 20005-3096. A courtesy copy of the instant decision and a courtesy copy of a decision on patent owner's November 9, 2011 petition, mailed on even date herewith, are being provided to the address specified in patent owner's November 1, 2011 paper.

REVIEW OF RELEVANT FACTS

1. On February 10, 2009, U.S. Patent No. 7,490,151 (the '151 patent) issued to Munger et al. with 16 claims.

2. On July 25, 2011, a first request for *inter partes* reexamination of claims 1-16 of the '151 patent was filed by a third party requester and assigned Reexamination Control No. 95/001,697 ("the '1697 proceeding"). The request identified Apple Inc., ("the '1697 requester") as the real party in interest.

3. On August 16, 2011, a second request for *inter partes* reexamination of claims 1-16 of the '151 patent was filed by a third party requester and assigned Reexamination Control No. 95/001,714 ("the '1714 proceeding"). The request identified Cisco Systems, Inc. ("the '1714 requester") as the real party in interest.

4. On October 21, 2011, *inter partes* reexamination was ordered on claims 1-16 of the '151 patent in the '1697 proceeding. An Office action was not concurrently issued in the

proceeding. The order indicated that an Office action would issue in due course.

5. On October 31, 2011, *inter partes* reexamination was ordered on claims 1-16 of the '151 patent in the '1714 proceeding. An Office action was not concurrently issued in the proceeding. The order indicated that an Office action would issue in due course.

6. On November 9, 2011, patent owner filed, in the '1714 proceeding, a petition under 37 CFR 1.182 entitled "PETITION TO SUSPEND AND NOT MERGE *INTER PARTES* REEXAMINATION" and, on November 18, 2011, the '1714 requester filed an opposition entitled "PETITION UNDER 1.182 TO OPPOSE PATENT OWNER'S PETITION TO SUSPEND AND NOT MERGE."

7. To date, no Office action has issued in either the '1697 or the '1714 *inter partes* proceeding.

8. A decision dismissing patent owner's November 9, 2011 petition under 37 CFR 1.182, and addressing the '1714 requester's opposition thereto, is being mailed on even date herewith.

DECISION

I. MERGER OF PROCEEDINGS

Reexamination is ordered in the two above-captioned proceedings for the same claims of the same patent. Both proceedings are *inter partes* reexamination proceedings. Both proceedings are still pending, and have not been terminated. Therefore, consideration of merger is ripe at this point in time.

37 CFR 1.989 provides:

> (a) If any reexamination is ordered while a prior *inter partes* reexamination proceeding is pending for the same patent and prosecution in the prior *inter partes* reexamination proceeding has not been terminated, a decision may be made to merge the two proceedings or to suspend one of the two proceedings. Where merger is ordered, the merged examination will normally result in the issuance and publication of a single reexamination certificate under § 1.997.

The 95/001,697 and 95/001,714 *inter partes* proceedings are merged. The merged proceeding will be conducted in accordance with the guidelines and requirements that follow.

II. THE SAME CLAIMS MUST BE MAINTAINED IN BOTH PROCEEDINGS

Presently, the claims (and specification) are identical in both files. Patent owner is required to continue to maintain the same claims (and specification) in both files *throughout the merged proceeding*.

III. CONDUCT OF MERGED PROCEEDING

A. Governing regulations for the merged proceeding:

The present decision merges two *inter partes* reexamination proceedings. Pursuant to 37 CFR 1.989(b), the merged proceeding is governed by 37 CFR §§ 1.902 through 1.997. Pursuant to 37 CFR 1.989(a), the merged examination will normally result in the issuance and publication of a single reexamination certificate under 37 CFR 1.997.

B. *Inter partes* Third Party Requester Participation:

1. Comment rights:

Upon merger of proceedings all *inter partes* requesters can comment pursuant to 35 U.S.C. 314(b)(2).[1] First, an *inter partes* requesters' right to comment is contingent upon the patent owner responding to, or commenting on, an Office action. Second, an *inter partes* requesters' right to comment is limited to issues raised in either the Office action or the patent owner's response to the action. Finally, the *inter partes* requesters' comments must be submitted within the statutory time period of 30 days from date of service of patent owner's response.

No *inter partes* requester has a right to comment on any issue raised outside the confines of the statute, e.g. issues raised in a previous Office action (but not raised in the most recent Office action or response) or the request and comments from another requester.

2. Appeal Rights:

The *inter partes* reexamination procedures for taking appeal, and for participating in the patent owner's appeal, are explained in MPEP 2674 through 2675.02, 2678 through 2683. As pointed out in MPEP 2674:

> A notice of appeal by a third party requester must identify each rejection *that was previously proposed by that third party requester* which the third party requester intends to contest. It is not sufficient to merely appeal from the allowance of a claim (i.e., the examiner's finding of a claim patentable); the third party requester must identify each previously proposed rejection to be contested.

Thus, each *inter partes* reexamination requester's appeal must only be taken from the finding(s) of patentability of claims in the RAN that the individual third party requester proposed in the request, and any that the individual third party requester properly added during the examination stage of the merged proceeding. Also, as provided by 37 CFR 41.67(c)(1)(vi):

---

[1] Each time that the patent owner files a response to an action on the merits from the Patent and Trademark Office, the third-party requester shall have one opportunity to file written comments addressing issues raised by the action of the Office or the patent owner's response thereto, if those written comments are received by the Office within 30 days after the date of service of the patent owner's response.

> No new ground of rejection can be proposed by a third party requester appellant, unless such ground was withdrawn by the examiner during the prosecution of the proceeding, and the third party requester has not yet had an opportunity to propose it as a third party requester proposed ground of rejection.

Thus, the appellant's brief shall present a concise statement of each issue. And, no new ground of rejection (i.e., a ground that the individual requester did not propose) can be proposed by a third party requester appellant, unless that ground was withdrawn by the examiner during the prosecution of the proceeding, and the third party requester did not yet have an opportunity to propose it as a third party requester proposed ground of rejection.

C. Papers mailed/filed:

All papers mailed by the Office throughout the merged proceeding will take the form of a single action which applies to all proceedings. All papers issued by the Office, or filed by the patent owner and the third party requesters, will contain the identifying data for all proceedings and will be physically entered in each reexamination file. All papers filed by the patent owner and the third party requesters must consist of a single paper, **filed in duplicate**, each bearing a signature and identifying data for all files, for entry into each file.

All papers filed by patent owner and the third party requesters should be directed as follows:

by Mail to:	Attn: Mail Stop "Inter Partes Reexam" Central Reexamination Unit Commissioner for Patents P.O. Box 1450 Alexandria, VA 22313-1450
by FAX to:	(571) 273-9900 Central Reexamination Unit
by Hand to:	Customer Service Window Attn: Central Reexamination Unit Randolph Building, Lobby Level 401 Dulany Street Alexandria, VA 22314
by EFS:	Registered users may submit papers via the electronic filing system EFS-Web, at: https://efs.uspto.gov/authenticate/AuthenticateUserLocalEPF.html

Patent owner and requesters are reminded that every paper filed in the merged proceeding subsequent to this decision must be served on all the other parties, and every paper filed must reflect that such paper was served on all the other parties, pursuant to 37 CFR 1.903. All papers are to be addressed to the Central Reexamination Unit as provided above.

D. Amendments:

The filing of any amendments to the drawings, specification or claims must comply with 37 CFR 1.943, which incorporates the provisions of 37 CFR 1.530, and the guidelines of MPEP § 2666.01, which in turn references the guidelines of MPEP § 2250.

37 CFR 1.121 does not apply to amendments in reexamination. Accordingly, clean copies of the amended claims are not required and are not to be submitted; rather amendments are to be presented via markings pursuant to paragraph 37 CFR 1.530(f), except that a claim should be canceled by a statement canceling the claim, without presentation of the text of the claim.

Pursuant to 37 CFR 1.530(i), all amendments must be made relative to the patent specification, including the claims, and drawings, which are in effect as of the date of filing the request for reexamination. *Amendments are not to be made relative to previous amendments.* Thus, for all amendments, all words not appearing in the patent are always underlined, and only words being deleted from the patent appear in brackets.

E. Fees:

Where a paper is filed that requires payment of a fee (e.g., petition fee, excess claims fee, extension of time fee, appeal fee, brief fee, oral hearing fee), only a single fee need be paid. For example, only one fee need be paid for any patent owner's appellant brief (or that of an *inter partes* reexamination requester) which may be filed, even though the brief relates to merged multiple proceedings, and copies must be filed (as pointed out above) for each file in the merged proceeding.

F. Citation of Patents and Printed Publications:

Upon return of the present merged proceeding to the examiner, the examiner will review the files to ensure that each file contains identical citations of prior patents and printed publications, and will cite such documents as are necessary as part of the next action in order to place the files in that condition.

G. Appeal Procedure Reminders for *Inter Partes* Reexamination:

The parties are reminded of the procedures for taking appeal in an *inter partes* reexamination as explained in MPEP 2674 and 2675. The appeal must only be taken from (1) the rejection(s) of the claims in the Right of Appeal Notice (RAN) that the *patent owner* proposes to contest, or (2) the finding(s) of patentability of claims in the RAN that the *third party requester* proposes to contest. Therefore, in the notice of appeal, the patent owner must identify each claim rejected by examiner that the patent owner intends to contest and the third party requester must identify each rejection *that was previously proposed by that third party requester* that the third party requester intends to contest. (37 CFR 41.61) No new ground of rejection (including one proposed by another requester, but not the appellant requester) can be proposed by a third party requester appellant, unless such ground was withdrawn by the examiner during the prosecution of the proceeding, and the third party requester has not yet had an opportunity to propose it as a third

party requester proposed ground of rejection. See 37 CFR 41.67(c)(1)(vi) as to the proposed rejections that each individual requester can challenge in the appellant brief.

CONCLUSION

1. *Inter partes* Reexamination Control Nos. 95/001,697, and 95/001,714 are merged into a single proceeding, to be conducted in accordance with the procedure set forth above in Part III of this decision.

2. Telephone inquiries related to the present decision should be directed to Nicole D. Haines, Legal Advisor, at 571-272-7717 or to the undersigned at 571-272-7726.

Pinchus M. Laufer
Senior Legal Advisor
Office of Patent Legal Administration

March 14, 2012

cc: Finnegan, Henderson, Farabow, Garrett & Dunner LLP
901 New York Avenue, NW
Washington, DC 20001-4413

UNITED STATES PATENT AND TRADEMARK OFFICE

UNITED STATES DEPARTMENT OF COMMERCE
United States Patent and Trademark Office
Address: COMMISSIONER FOR PATENTS
P.O. Box 1450
Alexandria, Virginia 22313-1450
www.uspto.gov

APPLICATION NO.	FILING DATE	FIRST NAMED INVENTOR	ATTORNEY DOCKET NO.	CONFIRMATION NO.
95/001,703	08/05/2011	6,768,497 B2	6768497RX	9764

13992 7590 03/16/2012

NDQ Special Reexam Group
1000 Louisiana Street, Fifty-Third Floor
Houston, TX 77002

EXAMINER	
ART UNIT	PAPER NUMBER

DATE MAILED: 03/16/2012

Please find below and/or attached an Office communication concerning this application or proceeding.

UNITED STATES PATENT AND TRADEMARK OFFICE

Commissioner for Patents
United States Patents and Trademark Office
P.O.Box 1450
Alexandria, VA 22313-1450
www.uspto.gov

DO NOT USE IN PALM PRINTER

THIRD PARTY REQUESTER'S CORRESPONDENCE ADDRESS
SLATER & MATSIL, L.L.P.
17950 PRESTON RD
SUITE 1000
DALLAS, TX 75252-5793

Date:

MAILED

MAR 16 2012

CENTRAL REEXAMINATION UNIT

Transmittal of Communication to Third Party Requester
Inter Partes Reexamination

REEXAMINATION CONTROL NO. : 95001703
PATENT NO. : 6768497
TECHNOLOGY CENTER : 3999
ART UNIT : 3992

Enclosed is a copy of the latest communication from the United States Patent and Trademark Office in the above identified Reexamination proceeding. 37 CFR 1.903.

Prior to the filing of a Notice of Appeal, each time the patent owner responds to this communication, the third party requester of the inter partes reexamination may once file written comments within a period of 30 days from the date of service of the patent owner's response. This 30-day time period is statutory (35 U.S.C. 314(b)(2)), and, as such, it cannot be extended. See also 37 CFR 1.947.

If an ex parte reexamination has been merged with the inter partes reexamination, no responsive submission by any ex parte third party requester is permitted.

All correspondence relating to this inter partes reexamination proceeding should be directed to the Central Reexamination Unit at the mail, FAX, or hand-carry addresses given at the end of the communication enclosed with this transmittal.

UNITED STATES PATENT AND TRADEMARK OFFICE

Commissioner for Patents
United States Patent and Trademark Office
P.O. Box 1450
Alexandria, VA 22313-1450
www.uspto.gov

MAILED

MAR 16 2012

CENTRAL REEXAMINATION UNIT

NDQ Special Reexam Group
1000 Louisiana Street, Fifty-Third Floor
Houston, TX 77002

(For Patent Owner)

Slater & Matsil, LLP
17950 Preston Road, Suite 1000
Dallas, TX 75252-5793

(For *Inter Partes* Requester)

Inter Partes Reexamination Proceeding
Control No. 95/001,703
Filed: August 05, 2011
For: U.S. Patent No. 6,768,497

: **DECISION GRANTING**
: **PETITION AND *SUA SPONTE***
: **WAIVING PAGE LIMIT FOR**
: **REQUESTER'S COMMENTS**

This is a decision on the patent owner paper entitled "PETITION FOR LIMITED WAIVER OF THE PAGE LIMIT REQUIREMENT FOR OFFICE ACTION RESPONSE," filed on November 28, 2011.

The patent owner petition is before the Office of Patent Legal Administration for consideration.

The patent owner petition under 37 CFR 1.183 is granted for the reasons set forth herein.

BACKGROUND

1. On July 27, 2004, United States Patent No. 6,768,497 ("the '497 patent") issued to Baar et al.

2. On August 05, 2011, a request for *inter partes* reexamination of the '497 patent was filed by a third party requester, which request was assigned Reexamination Control No. 95/001,703 ("the '1703 proceeding").

3. On September 28, 2011, the Office mailed an order granting *inter partes* reexamination in the '1703 proceeding.

4. On September 28, 2011, the Office issued a non-final Office action in the '1703 proceeding.

5. On November 28, 2011, patent owner filed the instant petition entitled, "PETITION FOR LIMITED WAIVER OF THE PAGE LIMIT REQUIREMENT FOR OFFICE ACTION RESPONSE" ("the petition under 37 CFR 1.183"), concurrently with "PATENT OWNER'S RESPONSE TO THE NON-FINAL OFFICE ACTION".

DECISION

I. Relevant Authority

37 CFR 1.183 provides:

> In an extraordinary situation, when justice requires, any requirement of the regulations in this part which is not a requirement of the statutes may be suspended or waived by the Director or the Director's designee, *sua sponte*, or on petition of the interested party, subject to such other requirements as may be imposed. Any petition under this section must be accompanied by the petition fee set forth in § 1.17(f).

37 CFR 1.943(b) provides:

> Responses by the patent owner and written comments by the third party requester shall not exceed 50 pages in length, excluding amendments, appendices of claims, and reference materials such as prior art references.

II. Patent Owner Petition Under 37 CFR 1.183

Patent owner's November 28, 2011 petition under 37 CFR 1.183, requesting waiver of the 50-page limit of 37 CFR 1.943(b) for its response to the September 28, 2011 Office action, has been fully considered.

37 CFR 1.183 provides for suspension or waiver of any requirement of the regulations which is not a requirement of the statutes in an extraordinary situation, when justice requires, on petition of the interested party. The burden is on petitioner to set forth with specificity the facts that give rise to an extraordinary situation in which justice requires suspension of a rule. A showing which petitioner can make in support of a request for waiver of the 50-page limit of 37 CFR 1.943(b) can be an attempt to draft a patent owner's response in compliance with the 50-page limit, and submission of a resulting response that is in excess of 50 pages concurrently with a petition under 37 CFR 1.183 for waiver of 37 CFR 1.943(b), requesting entry of the submitted response. Such a response can be evaluated for economizing, extraneous material, and arrangement, without repetition of information already of record. In this way, petitioner can rely on the proposed response: (1) for justification that more pages are needed to complete the response, and (2) to set forth an accurate determination of exactly how many additional pages petitioner deems to be needed for the response.

In the instant petition under 37 CFR 1.183, patent owner requests that the page limit requirement of 37 CFR 1.943(b) be waived for patent owner's concurrently-filed November 28, 2011 response. In particular, patent owner requests that the Office permit entry of a 63-page response consisting of "48 pages of comments directed to issues raised in the First Office Action" and "a declaration of Dr. Christopher L. North, which includes 15 pages (pp. 5-19) of discussion directed to his analysis that the prior art does not anticipate or render obvious the claims."[1]

[1] See petition under 37 CFR 1.183 at page 1.

In support of waiver of 37 CFR 1.943(b), patent owner states that the September 28, 2011 Office action "includes forty-three (43) rejections based on prior art references applied to 96 of the 100 claims in the subject patent" and that the Office action "incorporated by reference over 600 pages from the Third Party Requester's Request for Reexamination and claim chart appendices."[2] Patent owner asserts that it "is requesting an increase in the page limit to 63 pages or 1.46 pages per rejection to address each of the 43 pending rejections 'distinctly and specifically'" as 37 CFR 1.111(b) does not permit general allegations that the claims define a patentable invention.[3] Thus, patent owner asserts that "justice requires a limited waiver of the page limit requirements of 37 C.F.R. 1.943(b) to allow the Patent Owner to have an opportunity to effectively address all of the issues raised by the 43 rejections based on prior art references, which incorporate by reference over 600 pages of the Third Party Request and claim charts."[4]

A document is deemed to be subject to the 50-page length requirement when the document includes legal argument, *i.e.*, arguments of counsel such as, *e.g.*, arguments that the claims are patentable or unpatentable, or that are directed to how an outstanding or proposed rejection is overcome, or, in the case of a document filed by the requester, how an outstanding or proposed rejection is supported. Each determination of whether a document, such as an affidavit or declaration, contains a legal argument that will cause the document to be subject to the page count is made on a case-by-case basis. In determining whether a document such as an affidavit or declaration under 37 CFR 1.132, or any other document of a submission, includes legal argument, the Office analyzes whether the document is providing factual evidence, *i.e.*, evidence of **technological facts**, or whether the document contains argument that is merely an extension of the arguments of counsel. Factual evidence includes, for example, declarations that swear behind the filing date of a reference, that establish the date of a printed publication, that provide a technical explanation or technical definition of terms of art used by a reference, or that provide comparative test results and a scientific, or technological, analysis of the results (see, *e.g.*, MPEP 716.02). If a document is limited to factual evidence, the document is not included in the page count. In addition, affidavits or declarations **limited to** establishing commercial success, long-felt need and failure of others, skepticism of experts, or copying, as per MPEP 716.03-716.06, respectively, will not be included in the page count.

In this instance, patent owner has made a showing in support of the request for waiver of 37 CFR 1.943(b) by submitting a response that is in excess of 50 pages.[5] Based on the individual facts and circumstances of this case such as, for example, the number of pages incorporated by reference from the request for reexamination in the '1703 proceeding in the September 28, 2011 Office action,[6] it is deemed equitable to waive the 50-page limit of 37 CFR 1.943(b) in this instance to the extent that patent owner's response submission exceeds the regulatory page limit.

---

[2] *Id.* at pages 1-2.
[3] *Id.* at page 2.
[4] *Id.* at page 2.
[5] The response submission exceeds the 50-page limit by up to 13 pages. The remarks portion includes 48 pages that count toward the regulatory page limit (the table of contents pages and the listing of the claims are excluded from the page count), and patent owner asserts that 15 pages of the declaration of Christopher L. North include legal argument that count toward the regulatory page limit.
[6] The Office action spans approximately 50 pages and incorporates by reference over 150 pages from the request for reexamination and accompanying claim charts in the '1703 proceeding in setting forth the grounds of rejection.

Accordingly, patent owner's petition under 37 CFR 1.183 is granted and the page limit of 37 CFR 1.943(b) is waived to the extent necessary to permit entry of patent owner's November 28, 2011 response submission. This waiver makes patent owner's November 28, 2011 response submission page-length compliant.

III. Time Period and Page Limit for Submission of Third Party Requester Comments

This decision, *sua sponte*, waives the provisions of 37 CFR 1.943(b) to the extent that any written comments by third party requester filed in response to patent owner's response as set forth in this decision shall not exceed 63 pages in length, excluding reference materials, such as prior art references. **This waiver is conditional on the submission being in at least 12 point font and one-and-a-half or double spaced, with appropriate margins.** Requester has 30 days from the mailing date of this decision, granting patent owner's petition under 37 CFR 1.183 and making patent owner's November 28, 2011 response page-length compliant, to file a comments paper pursuant to 37 CFR 1.947.

CONCLUSION

1. Patent owner's November 28, 2011 petition under 37 CFR 1.183 is granted and the page limit of 37 CFR 1.943(b) is waived to the extent necessary to permit entry of patent owner's November 28, 2011 response submission. This waiver makes patent owner's November 28, 2011 response submission page-length compliant.

2. This decision, *sua sponte*, waives the provisions of 37 CFR 1.943(b) to the extent that any written comments by third party requester filed in response to patent owner's response as set forth in this decision shall not exceed 63 pages in length, excluding reference materials, such as prior art references. **This waiver is conditional on the submission being in at least 12 point font and one-and-a-half or double spaced, with appropriate margins.** Requester has 30 days from the mailing date of this decision, granting patent owner's petition under 37 CFR 1.183 and making patent owner's November 28, 2011 response submission page-length compliant, to file a comments paper pursuant to 37 CFR 1.947.

3. Any questions concerning this communication should be directed to Nicole D. Haines, Legal Advisor, at (571) 272-7717.

Pinchus M. Laufer
Senior Legal Advisor
Office of Patent Legal Administration

03-16-2012

UNITED STATES PATENT AND TRADEMARK OFFICE

Commissioner for Patents
United States Patent and Trademark Office
P.O. Box 1450
Alexandria, VA 22313-1450
www.uspto.gov

Workman Nydegger
1000 Eagle Gate Tower
60 East South Temple
Salt Lake City, UT 84111

(For Patent Owner)

MAILED

FEB 28 2012

CENTRAL REEXAMINATION UNIT

Stefan J. Kirchanski
Venable LLP
2049 Century Park East
21st Floor
Los Angeles, CA 90067

(For Third Party Requester)

In re Allen :
Inter Partes Reexamination Proceeding : **DECISION ON**
Control No. 95/001,705 : **PETITION UNDER**
Filed: September 12, 2011 : **37 CFR 1.181 & 1.927**
For: U.S. Patent No. 7,902,129 :

The third party requester filed a paper on November 28, 2011, entitled "Petition to the Director Under 37 CFR § 1.181 for Review of Denial Request for *Inter Partes* Reexamination of U.S. Patent No. 7,902,129" (hereinafter the petition). The petition is before the Assistant Deputy Commissioner for Patent Operations, who is acting in a capacity to oversee the Central Reexamination Unit (CRU). Petitioner, the reexamination requester, seeks review of the Order Denying Request for *Inter Partes* Reexamination mailed October 28, 2011.

The petition is **GRANTED** to the extent that reexamination is granted for claims 8, 28, and 31 of U.S. Patent No. 7,902,129.

REVIEW OF FACTS

1. U.S. Patent No. 7,902,129 (hereinafter, the '129 patent) issued on March 8, 2011.

2. A replacement request for *ex parte* reexamination was filed by a third party requester on September 12, 2011. The resulting reexamination proceeding was assigned Control No. 95/001,705 (hereinafter, the '705 proceeding). Reexamination was requested for claims 1, 4, 8, 17, 28, 31, and 32 of the '129 patent.

3. A Notice of Reexamination Request Filing Date for the '705 proceeding was issued on September 27, 2011.

4. An order denying the request for reexamination for claims 1, 4, 8, 17, 28, 31, and 32 in the '705 proceeding was mailed on October 28, 2011.

5. On November 28, 2011, the third party requester filed the present petition in the '705 proceeding, which requests review by the director as to whether the Wang and Holland references present a substantial new question (SNQ)[1] of patentability for claims 8, 28, and 31 of the '129 patent.

Petitioner's Grounds in Support of the Requested Relief

Petitioner (the third party requester) alleges that the examiner's denial of the request for reexamination is improper because the examiner applied the incorrect standard for SNQ regarding the teachings of the Holland and Wang references as applied to claims 8, 28, and 31. Specifically, the petitioner advances that the examiner incorrectly concluded that the request in the '705 proceeding does not raise a substantial new question of patentability (SNQ) different from the teachings applied in the prior examination. The examiner determined that request in the '705 proceeding did not raise a SNQ because the teachings of Wang and Holland relied upon to raise the SNQ were cumulative to the teachings relied upon in the prior examination and that Wang was not deemed to be prior art. See pages 2-4 of the order denying reexamination mailed October 28, 2011.

DECISION

I. Standard of Review

35 USC § 312(c) and 37 CFR 1.927 provide for the filing of a petition to review an examiner's determination refusing to order *inter partes* reexamination. The CRU Director's review on

[1] The filing date for the request is September 12, 2011, which is prior to the passage of the America Invents Act. Therefore, the standard for granting a reexamination is whether a substantial new question (SNQ) of patentability exists for at least one claim.

petition is *de novo*. Therefore, the review will determine whether the examiner's refusal to order reexamination for claims 8, 28, and 31 was correct, and will not necessarily indicate agreement or disagreement with every aspect of the examiner's rationale for the denial of the request to order reexamination for claims 8, 28, and 31 of the '129 patent.

II. The Legal Standard for Ordering Reexamination

A review of 35 USC 311-317 and 37 CFR 1.915, 1.919, and 1.923, prior to changes to implement the America Invents Act, showed that *inter partes* reexamination of a United States Patent is only authorized when a consideration of prior art consisting of patents or printed publications establishes that a substantial new question of patentability exists with respect to one or more claims of that patent. In particular, 35 USC 311(a) requires that a request for *inter partes* reexamination be based upon prior art as set forth in 35 USC 301, that is, prior art consisting of patents or printed publications, while 37 CFR 1.915(b)(3) required that a request for *inter partes* reexamination include "a statement pointing out each substantial new question of patentability based on the cited patents and printed publications." A substantial question of patentability is raised by a cited patent or printed publication when there is a substantial likelihood that a reasonable examiner would consider the prior art patent or printed publication important in deciding whether or not the claim is patentable. If the prior art patents and printed publications relied upon in the request raise a substantial question of patentability, then a "substantial new question of patentability" is present, unless the same question of patentability has already been decided by a final holding of invalidity after all appeals, or by the Office in a previous examination or in a reexamination of a patent.

In accordance with this legislative history for the original reexamination statute,[2] MPEP 2642, part II.A., was drafted to require, in order to raise a SNQ for old art, that the old art must be "presented/viewed in a new light, or in a different way, as compared with its use in the earlier examination(s), in view of a material new argument or interpretation presented in the request." This new light must be in terms of how to interpret the state of the "pre-existing technology," as was envisioned by the authors of the original reexamination statute, and left unchanged by the 2002 enactment. For example, a reference may be read in a "new light" if the requester draws attention to a portion of the reference that was not relied upon, or otherwise addressed, in a rejection during the earlier concluded examination of the patent for which reexamination is requested. Similarly, a reference may be interpreted in a new light, or in a different way, by defining a term of art used in the reference, where the definition of the term of art had not been previously presented in the earlier concluded examination of the patent. If a substantial new question of patentability is found, an order for *inter partes* reexamination of the patent is issued. An SNQ is not raised by the old prior art if the Office has previously considered (in an earlier examination of the patent) the same question of patentability as to the patent and has decided that question in favor of the patent owner based on the same prior art patents or printed publications. *In re Recreative Technologies*, 83 F.3d 1394, 38 USPQ2d 1776 (Fed. Cir. 1996).

---

[2] Public Law 96-517, enacted on December 12, 1980.

III. Analysis of the Request for Reexamination in the '705 proceeding

The Request in the '705 proceeding set forth the following proposed rejections, in part, based upon a substantial new question (SNQ) of patentability:

(1) Claims 8, 28, and 31 are unpatentable under 35 USC 102 and 103 over Wang.

(2) Claims 8, 28, and 31 are unpatentable under 35 USC 102 and 103 over Holland.

The Request was denied in the October 28, 2011 Order Denying Request for *Inter Partes* Reexamination, wherein the examiner maintained that a SNQ was not raised by the Wang and Holland references that is different from the questions raised and answered in the prior examination and that Wang was not deemed to be prior art. The examiner determined that the teachings of the Wang and Holland references set forth in the Request were cumulative to the teachings of the prior art applied in prior examination. Therefore, the examiner stated that the Request did not present a new, non-cumulative technical teaching. Thus, the teachings of the Wang and Holland references presented in the Request in the '705 proceeding are stated, in the denial, to be cumulative and not to raise a substantial new question of patentability.

As pointed out above, 37 CFR 1.927 provides for the filing of a petition to review an examiner's determination refusing to order *inter partes* reexamination. The CRU Director reviews the request *de novo* in response to the petition, and such a review of the record, as a whole, has been made in this case.

Turning to the Request, page 27 states that the Holland reference teaches two layers welded at their edges to form a cavity that spans the width of the sheet and that the cavity contains only a lubricating agent (e.g., oil). The request cites to the Figure 1 and the top portion of page 5 of the Holland reference for support. The examiner did not dispute that Holland had such a teaching but deemed the teaching to be cumulative to the teaching in Zettler, which was applied against the claims in the prior examination. The examiner, therefore, concluded that Holland did not have a new, non-cumulative technical teaching that supports a finding of a SNQ.

The petition states that Holland's teachings are not cumulative to the teachings of Zettler applied in the prior examination. See pages 11-15 in the petition.

Upon review of the record, the director finds that Holland's teachings are not cumulative to the teachings of Zettler. Holland teaches that the first and second layers 3,4 define a cavity 5 therebetween in which only the lubricating agent (e.g., oil) is carried, wherein the cavity spans a width of the sheet between which the first and second layers are sealed to one another at the edges of the sheet by welded seams 2 (see Figure 1 and page 5 of the translation of Holland) Specifically, page 5 of the translation states:

> "In Figures 1 and 2 of the illustrations, 1 indicates a cushion-like container, consisting of two oil-impermeable sheets 3 and 4 bonded together at welded seams 2. Oil or a material impregnated with oil is located in a pocket 5 between the sheets 3 and 4."

In application 11/563,616, which issued as the '129 patent, the examiner found claim 47 allowable over Zettler because "Zettler only discloses rhombohedral lubricant-containing cavities that do not span the width of the sheet between which the first and second layers are sealed to each other." See the second full paragraph on page 6 of the November 10, 2010 Office action. The November 10, 2010 Office action rejected claim 9, which included the stiffness and/or rigidity limitation found in the last clause of the claim, as being anticipated by Zettler, The subject matter of claim 47 was incorporated into claim 9 (which issued as patent claim 8) in the amendment dated November 16, 2010. In addition, the subject matter of claim 47 was incorporated into claim 49 (which issued as patent claim 28) and claim 54 (which issued as patent claim 31) in the examiner's amendment dated January 19, 2011. Therefore, the record of the prior examination shows that patent claims 8, 28, and 31 were allowed because the prior art did not teach a cavity, which only contains the lubricating agent, that spans a width of the sheet and is formed by sealing the first and second layers to one another at the edges of the sheet. As discussed above, Holland has teachings relevant to these limitations. In other words, Holland teaches a single cavity that contains only lubricant that spans the width of the sheet, whereas Zettler taught multiple rhombohedral cavities that contained lubricant, which was deemed as not meeting the claim limitations in the prior examination. Thus, Holland presents a new technical teaching which would be important to a reasonable examiner in determining the patentability of the claims because the teachings are relevant to the claim limitations deemed to be lacking in the prior art of record in the prior examination.

The Director has reviewed the entire record, and has determined that there is a substantial new question of patentability presented by the teachings of Holland for reasons set forth above. Accordingly, the petition is granted, and reexamination is hereby ordered. None of the other issues (e.g., the issues concerning Wang) presented in the petition are addressed in this decision; it is not necessary to do so after it is determined that at least one substantial new question has been raised by the request for reexamination, as to all the claims for which review was requested. The examiner to whom this proceeding will be assigned has the discretion to reevaluate whether (1) the other references cited in the request raise a substantial new question of patentability, and (2) if so, whether rejections based upon these references should be made.

CONCLUSION

1. Based on a *de novo* review of the record as a whole, the PETITION is GRANTED.

2. Accordingly, the request for *inter partes* reexamination of claims 8, 28, and 31 of the '129 patent is GRANTED, and reexamination is hereby ordered.

3. The examiner assignment of the ordered reexamination proceeding will be made pursuant to MPEP 2648. The examiner will issue a first Office action on the merits in due course.

4. Telephone inquiries related to this decision should be directed to Andres Kashnikow, Supervisory Patent Examiner, at (571) 272-4361.

Robert J. Oberleitner,
Assistant Deputy Commissioner for Patent Operations and
Acting Director, Central Reexamination Unit

UNITED STATES PATENT AND TRADEMARK OFFICE

UNITED STATES DEPARTMENT OF COMMERCE
United States Patent and Trademark Office
Address: COMMISSIONER FOR PATENTS
P.O. Box 1450
Alexandria, Virginia 22313-1450
www.uspto.gov

APPLICATION NO.	FILING DATE	FIRST NAMED INVENTOR	ATTORNEY DOCKET NO.	CONFIRMATION NO.
95/001,707	08/15/2011	7018704	11729.0001-00000	8559

7590 11/15/2011

BRINKS HOFER
GILSON & LIONE
P O BOX 10395
CHICAGO, IL 60610

EXAMINER	
ART UNIT	PAPER NUMBER

DATE MAILED: 11/15/2011

Please find below and/or attached an Office communication concerning this application or proceeding.

UNITED STATES PATENT AND TRADEMARK OFFICE

Commissioner for Patents
United States Patents and Trademark Office
P.O.Box 1450
Alexandria, VA 22313-1450
www.uspto.gov

DO NOT USE IN PALM PRINTER

THIRD PARTY REQUESTER'S CORRESPONDENCE ADDRESS
FINNEGAN, HENDERSON, FARABOW
GARRETT & DUNNER LLP
901 NEW YORK AVENUE, NW
WASHINGTON, DC 20001-4413

Date:

MAILED

NOV 15 2011

CENTRAL REEXAMINATION UNIT

Transmittal of Communication to Third Party Requester
Inter Partes Reexamination

REEXAMINATION CONTROL NO. : 95001707
PATENT NO. : 7018704
TECHNOLOGY CENTER : 3999
ART UNIT : 3991

Enclosed is a copy of the latest communication from the United States Patent and Trademark Office in the above identified Reexamination proceeding. 37 CFR 1.903.

Prior to the filing of a Notice of Appeal, each time the patent owner responds to this communication, the third party requester of the inter partes reexamination may once file written comments within a period of 30 days from the date of service of the patent owner's response. This 30-day time period is statutory (35 U.S.C. 314(b)(2)), and, as such, it cannot be extended. See also 37 CFR 1.947.

If an ex parte reexamination has been merged with the inter partes reexamination, no responsive submission by any ex parte third party requester is permitted.

All correspondence relating to this inter partes reexamination proceeding should be directed to the Central Reexamination Unit at the mail, FAX, or hand-carry addresses given at the end of the communication enclosed with this transmittal.

Decision on Petition for Extension of Time in Reexamination	Control No.:95/001707

MAILED

NOV 15 2011

CENTRAL REEXAMINATION UNIT

1. THIS IS A DECISION ON THE PETITION FILED November 10, 2011 .

2. THIS DECISION IS ISSUED PURSUANT TO:
   - A. ☐ 37 CFR 1.550(c) – The time for taking any action by a patent owner in an *ex parte* reexamination proceeding will be extended only for sufficient cause and for a reasonable time specified.
   - B. ☒ 37 CFR 1.956 – The time for taking any action by a patent owner in an *inter partes* reexamination proceeding will be extended only for sufficient cause and for a reasonable time specified.

   The petition is before the Central Reexamination Unit for consideration.

3. FORMAL MATTERS
   Patent owner requests that the period for responding to the Office action mailed on September 29, 2011, which sets a two-month period for filing a response thereto, be extended by one month.

   - A. ☒ Petition fee per 37 CFR §1.17(g)):
     - i. ☒ Petition includes authorization to debit a deposit account.
     - ii. ☐ Petition includes authorization to charge a credit card account.
     - iii. ☐ Other: _____.
   - B. ☒ Proper certificate of service was provided. (Not required in reexamination where patent owner is requester.)
   - C. ☒ Petition was timely filed.
   - D. ☒ Petition properly signed.

4. DECISION (See MPEP 2265 and 2665)
   - A. ☒ Granted or ☐ Granted-in-part for one month, because petitioner provided a factual accounting that established sufficient cause. (See 37 CFR 1.550(c) and 37 CFR 1.956).
     - ☐ Other/comment: _____.
   - B. ☐ Dismissed because:
     - i. ☐ Formal matters (See unchecked box(es) (A, B, C and/or D) in section 4 above).
     - ii. ☐ Petitioner failed to provide a factual accounting of reasonably diligent behavior by all those responsible for preparing a response to the outstanding Office action within the statutory time period.
     - iii. ☐ Petitioner failed to explain why, in spite of the action taken thus far, the requested additional time is needed.
     - iv. ☐ The statements provided fail to establish sufficient cause to warrant extension of the time for taking action (See attached).
     - v. ☐ The petition is moot.
     - vi. ☐ Other/comment: _____.

5. CONCLUSION Response is due on December 29, 2011.

   Telephone inquiries with regard to this decision should be directed to Deborah Jones at 571-272-1535 in the Central Reexamination Unit.

Deborah Jones 11/14/11

[*Signature*]

DEBORAH D. JONES
CRU SPE[illegible]091

(Title)

UNITED STATES PATENT AND TRADEMARK OFFICE

UNITED STATES DEPARTMENT OF COMMERCE
United States Patent and Trademark Office
Address: COMMISSIONER FOR PATENTS
P.O. Box 1450
Alexandria, Virginia 22313-1450
www.uspto.gov

APPLICATION NO.	FILING DATE	FIRST NAMED INVENTOR	ATTORNEY DOCKET NO.	CONFIRMATION NO.
95/001,710	08/15/2011	7582432	LT00557 REX	1935

43850 7590 12/29/2011

MORGAN, LEWIS & BOCKIUS LLP (SF)
One Market, Spear Street Tower, Suite 2800
San Francisco, CA 94105

EXAMINER	
ART UNIT	PAPER NUMBER

DATE MAILED: 12/29/2011

Please find below and/or attached an Office communication concerning this application or proceeding.

UNITED STATES PATENT AND TRADEMARK OFFICE

Commissioner for Patents
United States Patents and Trademark Office
P.O.Box 1450
Alexandria, VA 22313-1450
www.uspto.gov

DO NOT USE IN PALM PRINTER

THIRD PARTY REQUESTER'S CORRESPONDENCE ADDRESS
LIFE TECHNOLOGIES CORPORATION
5791 VAN ALLEN WAY
CARLSBAD, CA 92008

Date: **MAILED**

DEC 29 2011

CENTRAL REEXAMINATION UNIT

Transmittal of Communication to Third Party Requester
Inter Partes Reexamination

REEXAMINATION CONTROL NO. : 95001710
PATENT NO. : 7582432
TECHNOLOGY CENTER : 3999
ART UNIT : 3991

Enclosed is a copy of the latest communication from the United States Patent and Trademark Office in the above identified Reexamination proceeding. 37 CFR 1.903.

Prior to the filing of a Notice of Appeal, each time the patent owner responds to this communication, the third party requester of the inter partes reexamination may once file written comments within a period of 30 days from the date of service of the patent owner's response. This 30-day time period is statutory (35 U.S.C. 314(b)(2)), and, as such, it cannot be extended. See also 37 CFR 1.947.

If an ex parte reexamination has been merged with the inter partes reexamination, no responsive submission by any ex parte third party requester is permitted.

All correspondence relating to this inter partes reexamination proceeding should be directed to the Central Reexamination Unit at the mail, FAX, or hand-carry addresses given at the end of the communication enclosed with this transmittal.

PTOL-2070(Rev.07-04)

Decision on Petition for Extension of Time in Reexamination	Control No.:95/001,710

1. THIS IS A DECISION ON THE PETITION FILED December 19, 2011.

2. THIS DECISION IS ISSUED PURSUANT TO:
   A. ☐ 37 CFR 1.550(c) – The time for taking any action by a patent owner in an *ex parte* reexamination proceeding will be extended only for sufficient cause and for a reasonable time specified.
   B. ☒ 37 CFR 1.956 – The time for taking any action by a patent owner in an *inter partes* reexamination proceeding will be extended only for sufficient cause and for a reasonable time specified.
   The petition is before the Central Reexamination Unit for consideration.

3. FORMAL MATTERS
   Patent owner requests that the period for responding to the Office action mailed on November 21, 2011, which sets a two-month period for filing a response thereto, be extended by two months.

   A. ☒ Petition fee per 37 CFR §1.17(g)):
      i. ☒ Petition includes authorization to debit a deposit account.
      ii. ☐ Petition includes authorization to charge a credit card account.
      iii. ☐ Other: _____.
   B. ☒ Proper certificate of service was provided. (Not required in reexamination where patent owner is requester.)
   C. ☒ Petition was timely filed.
   D. ☒ Petition properly signed.

4. DECISION (See MPEP 2265 and 2665)
   A. ☐ Granted or ☒ Granted-in-part for one month, because petitioner provided a factual accounting that established sufficient cause. (See 37 CFR 1.550(c) and 37 CFR 1.956).
      ☐ Other/comment: _____.
   B. ☐ Dismissed because:
      i. ☐ Formal matters (See unchecked box(es) (A, B, C and/or D) in section 4 above).
      ii. ☐ Petitioner failed to provide a factual accounting of reasonably diligent behavior by all those responsible for preparing a response to the outstanding Office action within the statutory time period.
      iii. ☐ Petitioner failed to explain why, in spite of the action taken thus far, the requested additional time is needed.
      iv. ☐ The statements provided fail to establish sufficient cause to warrant extension of the time for taking action (See attached).
      v. ☐ The petition is moot.
      vi. ☐ Other/comment: _____.

5. CONCLUSION A response to the outstanding Office action is due on or before February 21, 2012.

   Telephone inquiries with regard to this decision should be directed to Deborah Jones at 571-272-1535 in the Central Reexamination Unit.

Deborah Jones 12/27/2011
[Signature]

Deborah D. Jones
Supervisory Patent Examiner
CRU - Art Unit 3991
(Title)

UNITED STATES PATENT AND TRADEMARK OFFICE

UNITED STATES DEPARTMENT OF COMMERCE
United States Patent and Trademark Office
Address: COMMISSIONER FOR PATENTS
P.O. Box 1450
Alexandria, Virginia 22313-1450
www.uspto.gov

APPLICATION NO.	FILING DATE	FIRST NAMED INVENTOR	ATTORNEY DOCKET NO.	CONFIRMATION NO.
95/001,711	08/15/2011	7019129	LT00558 REX	1951

43850 7590 12/28/2011

MORGAN, LEWIS & BOCKIUS LLP (SF)
One Market, Spear Street Tower, Suite 2800
San Francisco, CA 94105

EXAMINER	
ART UNIT	PAPER NUMBER

DATE MAILED: 12/28/2011

Please find below and/or attached an Office communication concerning this application or proceeding.

UNITED STATES PATENT AND TRADEMARK OFFICE

Commissioner for Patents
United States Patents and Trademark Office
P.O.Box 1450
Alexandria, VA 22313-1450
www.uspto.gov

DO NOT USE IN PALM PRINTER

THIRD PARTY REQUESTER'S CORRESPONDENCE ADDRESS

Tae Bum Shin
LIFE TECHNOLOGIES CORP
5791 Van Allen Way
Carlsbad, CA 92008

Date: 12-28-11

Transmittal of Communication to Third Party Requester
Inter Partes Reexamination

REEXAMINATION CONTROL NO. : 95001711
PATENT NO. : 7019129
TECHNOLOGY CENTER : 3999
ART UNIT : 3991

Enclosed is a copy of the latest communication from the United States Patent and Trademark Office in the above identified Reexamination proceeding. 37 CFR 1.903.

Prior to the filing of a Notice of Appeal, each time the patent owner responds to this communication, the third party requester of the inter partes reexamination may once file written comments within a period of 30 days from the date of service of the patent owner's response. This 30-day time period is statutory (35 U.S.C. 314(b)(2)), and, as such, it cannot be extended. See also 37 CFR 1.947.

If an ex parte reexamination has been merged with the inter partes reexamination, no responsive submission by any ex parte third party requester is permitted.

All correspondence relating to this inter partes reexamination proceeding should be directed to the Central Reexamination Unit at the mail, FAX, or hand-carry addresses given at the end of the communication enclosed with this transmittal.

Decision on Petition for Extension of Time in Reexamination	Control No.:95/001,711

1. THIS IS A DECISION ON THE PETITION FILED December 19, 2011.

2. THIS DECISION IS ISSUED PURSUANT TO:
   A. ☐ 37 CFR 1.550(c) – The time for taking any action by a patent owner in an *ex parte* reexamination proceeding will be extended only for sufficient cause and for a reasonable time specified.
   B. ☒ 37 CFR 1.956 – The time for taking any action by a patent owner in an *inter partes* reexamination proceeding will be extended only for sufficient cause and for a reasonable time specified.
   The petition is before the Central Reexamination Unit for consideration.

3. FORMAL MATTERS
   Patent owner requests that the period for responding to the Office action mailed on November 21, 2011, which sets a two-month period for filing a response thereto, be extended by two months.

   A. ☒ Petition fee per 37 CFR §1.17(g)):
      i. ☒ Petition includes authorization to debit a deposit account.
      ii. ☐ Petition includes authorization to charge a credit card account.
      iii. ☐ Other: _____.
   B. ☒ Proper certificate of service was provided. (Not required in reexamination where patent owner is requester.)
   C. ☒ Petition was timely filed.
   D. ☒ Petition properly signed.

4. DECISION (See MPEP 2265 and 2665)
   A. ☐ Granted or ☒ Granted-in-part for one month, because petitioner provided a factual accounting that established sufficient cause. (See 37 CFR 1.550(c) and 37 CFR 1.956).
      ☐ Other/comment: _____.
   B. ☐ Dismissed because:
      i. ☐ Formal matters (See unchecked box(es) (A, B, C and/or D) in section 4 above).
      ii. ☐ Petitioner failed to provide a factual accounting of reasonably diligent behavior by all those responsible for preparing a response to the outstanding Office action within the statutory time period.
      iii. ☐ Petitioner failed to explain why, in spite of the action taken thus far, the requested additional time is needed.
      iv. ☐ The statements provided fail to establish sufficient cause to warrant extension of the time for taking action (See attached).
      v. ☐ The petition is moot.
      vi. ☐ Other/comment: _____.

5. CONCLUSION A response to the outstanding Office action is due on or before February 21, 2012.

   Telephone inquiries with regard to this decision should be directed to Deborah Jones at 571-272-1535 in the Central Reexamination Unit.

Deborah Jones 2/27/11
[Signature] (Title) Deborah D. Jones
Supervisory Patent Examiner
CRU - Art Unit 3991

UNITED STATES PATENT AND TRADEMARK OFFICE

UNITED STATES DEPARTMENT OF COMMERCE
United States Patent and Trademark Office
Address: COMMISSIONER FOR PATENTS
P.O. Box 1450
Alexandria, Virginia 22313-1450
www.uspto.gov

APPLICATION NO.	FILING DATE	FIRST NAMED INVENTOR	ATTORNEY DOCKET NO.	CONFIRMATION NO.
95/001,712	08/15/2011	7,109,312	LT00559 REX	1964

43850 7590 12/28/2011

MORGAN, LEWIS & BOCKIUS LLP (SF)
One Market, Spear Street Tower, Suite 2800
San Francisco, CA 94105

EXAMINER	
ART UNIT	PAPER NUMBER

DATE MAILED: 12/28/2011

Please find below and/or attached an Office communication concerning this application or proceeding.

UNITED STATES PATENT AND TRADEMARK OFFICE

Commissioner for Patents
United States Patents and Trademark Office
P.O.Box 1450
Alexandria, VA 22313-1450
www.uspto.gov

DO NOT USE IN PALM PRINTER

THIRD PARTY REQUESTER'S CORRESPONDENCE ADDRESS

LIFE TECHNOLOGIES CORPORATION
5791 VAN ALLEN WAY
CARLSBAD, CA 92008

Date 12-28-11

Transmittal of Communication to Third Party Requester
Inter Partes Reexamination

REEXAMINATION CONTROL NO. : 95001712
PATENT NO. : 7109312
TECHNOLOGY CENTER : 3999
ART UNIT : 3991

Enclosed is a copy of the latest communication from the United States Patent and Trademark Office in the above identified Reexamination proceeding. 37 CFR 1.903.

Prior to the filing of a Notice of Appeal, each time the patent owner responds to this communication, the third party requester of the inter partes reexamination may once file written comments within a period of 30 days from the date of service of the patent owner's response. This 30-day time period is statutory (35 U.S.C. 314(b)(2)), and, as such, it cannot be extended. See also 37 CFR 1.947.

If an ex parte reexamination has been merged with the inter partes reexamination, no responsive submission by any ex parte third party requester is permitted.

All correspondence relating to this inter partes reexamination proceeding should be directed to the Central Reexamination Unit at the mail, FAX, or hand-carry addresses given at the end of the communication enclosed with this transmittal.

Decision on Petition for Extension of Time in Reexamination	Control No.:95/001,712

1. THIS IS A DECISION ON THE PETITION FILED December 19, 2011.

2. THIS DECISION IS ISSUED PURSUANT TO:
   A. ☐ 37 CFR 1.550(c) – The time for taking any action by a patent owner in an *ex parte* reexamination proceeding will be extended only for sufficient cause and for a reasonable time specified.
   B. ☒ 37 CFR 1.956 – The time for taking any action by a patent owner in an *inter partes* reexamination proceeding will be extended only for sufficient cause and for a reasonable time specified.
   The petition is before the Central Reexamination Unit for consideration.

3. FORMAL MATTERS
   Patent owner requests that the period for responding to the Office action mailed on November 21, 2011, which sets a two-month period for filing a response thereto, be extended by two months.

   A. ☒ Petition fee per 37 CFR §1.17(g)):
      i. ☒ Petition includes authorization to debit a deposit account.
      ii. ☐ Petition includes authorization to charge a credit card account.
      iii. ☐ Other: _____.
   B. ☒ Proper certificate of service was provided. (Not required in reexamination where patent owner is requester.)
   C. ☒ Petition was timely filed.
   D. ☒ Petition properly signed.

4. DECISION (See MPEP 2265 and 2665)
   A. ☐ Granted or ☒ Granted-in-part for one month, because petitioner provided a factual accounting that established sufficient cause. (See 37 CFR 1.550(c) and 37 CFR 1.956).
      ☐ Other/comment: _____.
   B. ☐ Dismissed because:
      i. ☐ Formal matters (See unchecked box(es) (A, B, C and/or D) in section 4 above).
      ii. ☐ Petitioner failed to provide a factual accounting of reasonably diligent behavior by all those responsible for preparing a response to the outstanding Office action within the statutory time period.
      iii. ☐ Petitioner failed to explain why, in spite of the action taken thus far, the requested additional time is needed.
      iv. ☐ The statements provided fail to establish sufficient cause to warrant extension of the time for taking action (See attached).
      v. ☐ The petition is moot.
      vi. ☐ Other/comment: _____.

5. CONCLUSION A response to the outstanding Office action is due on or before February 21, 2012.

   Telephone inquiries with regard to this decision should be directed to Deborah Jones at 571-272-1535 in the Central Reexamination Unit.

Deborah Jones 2/7/2012

[*Signature*] (Title) Deborah D. Jones
Supervisory Patent Examiner
CRU - Art Unit 3991

UNITED STATES PATENT AND TRADEMARK OFFICE

UNITED STATES DEPARTMENT OF COMMERCE
United States Patent and Trademark Office
Address: COMMISSIONER FOR PATENTS
P.O. Box 1450
Alexandria, Virginia 22313-1450
www.uspto.gov

APPLICATION NO.	FILING DATE	FIRST NAMED INVENTOR	ATTORNEY DOCKET NO.	CONFIRMATION NO.
95/001,714	08/16/2011	7,490,151 B2	43614.99	3428

22852 7590 12/01/2011

FINNEGAN, HENDERSON, FARABOW, GARRETT & DUNNER LLP
901 NEW YORK AVENUE, NW
WASHINGTON, DC 20001-4413

EXAMINER	
ART UNIT	PAPER NUMBER

DATE MAILED: 12/01/2011

Please find below and/or attached an Office communication concerning this application or proceeding.

UNITED STATES PATENT AND TRADEMARK OFFICE

Commissioner for Patents
United States Patents and Trademark Office
P.O.Box 1450
Alexandria, VA 22313-1450
www.uspto.gov

DO NOT USE IN PALM PRINTER

THIRD PARTY REQUESTER'S CORRESPONDENCE ADDRESS
HAYNES AND BOONE, LLP
IP SECTION
2323 VICTORY AVENUE, SUITE 700
DALLAS, TX 75129

Date:
MAILED
DEC 0 1 2011
CENTRAL REEXAMINATION UNIT

Transmittal of Communication to Third Party Requester
Inter Partes Reexamination

REEXAMINATION CONTROL NO. : 95001714
PATENT NO. : 7490151
TECHNOLOGY CENTER : 3999
ART UNIT : 3992

Enclosed is a copy of the latest communication from the United States Patent and Trademark Office in the above identified Reexamination proceeding. 37 CFR 1.903.

Prior to the filing of a Notice of Appeal, each time the patent owner responds to this communication, the third party requester of the inter partes reexamination may once file written comments within a period of 30 days from the date of service of the patent owner's response. This 30-day time period is statutory (35 U.S.C. 314(b)(2)), and, as such, it cannot be extended. See also 37 CFR 1.947.

If an ex parte reexamination has been merged with the inter partes reexamination, no responsive submission by any ex parte third party requester is permitted.

All correspondence relating to this inter partes reexamination proceeding should be directed to the Central Reexamination Unit at the mail, FAX, or hand-carry addresses given at the end of the communication enclosed with this transmittal.

UNITED STATES PATENT AND TRADEMARK OFFICE

Commissioner for Patents
United States Patent and Trademark Office
P.O. Box 1450
Alexandria, VA 22313-1450
www.uspto.gov

Joseph E. Palys : (For Patent Owner)
FINNEGAN,HENDERSON,FARABOW, :
GARRETT & DUNNER LLP :
901 New York Avenue, N.W. :
Washington, D.C.. 20001-4413 :

MAILED

DEC 0 1 2011

CENTRAL REEXAMINATION UNIT

David L. McCombs :
HAYNES AND BOONE LLP : (For Third Party
2323 Victory Ave., Suite 700 : Requester)
Dallas, Texas 75219 :

In re: Munger et al. :
Inter Partes Reexamination Proceeding : DECISION ON PETITIONS
Control No.: 95/001,714 :
For: U.S. Patent No.: 7,490,151 :

This is a decision on two petitions filed by the patent owner: a petition filed on November 9th, 2011, entitled "PETITION TO VACATE *INTER PARTES* REEXAMINATION" [hereinafter "petition 1"], and a petition filed by Third Party Requestor on November 18th, 2011, entitled "PETITION IN OPPOSITION TO PATENT OWNER'S PETITION TO VACATE *INTER PARTES* REEXAMINATION" [hereinafter "petition 2"].

Petition 1 is treated as a petition under 37 CFR § 1.181. Petition 2 is treated also as a petition under 37 CFR § 1.181 as a submission in opposition to Petition 1.

The petitions are before the Director of the Central Reexamination Unit. The petition 1 is denied and petition 2 is dismissed as moot.

REVIEW OF RELEVANT FACTS

- U.S. Patent No. 7,490,151 issued on February 10th, 2009.

- A request for *inter partes* reexamination was filed on August 16th, 2011 and assigned control no. 95/001,714.

- *Inter partes* reexamination was ordered on October 31st, 2011.
- Petition 1 was filed November 9th, 2011, and petition 2 was filed November 18th, 2011.

STATUTES, REGULATIONS, AND PATENT EXAMINING PROCEDURES

37 C.F.R. § 1.181 Petition to the Director

(a) Petition may be taken to the Director:
(1) From any action or requirement of any examiner in the ex parte prosecution of an application, or in ex parte or inter partes prosecution of a reexamination proceeding which is not subject to appeal to the Board of Patent Appeals and Interferences or to the court.

MPEP § 2646 (II) PETITION TO VACATE THE ORDER GRANTING REEXAMINATION

When a petition under 37 CFR 1.181 is filed to vacate a reexamination order, the third party requester may file a single submission in opposition to the petition.

DECISION

Patent owner ["petitioner"] argues in petition 1 that the Office vacate the proceedings because Office's order dated October 31st, 2011 is *ultra vires* as not based on prior art patents or printed publications. The petitioner further states that the Order failed to make an initial determination as to whether the Martin reference (or any of the other references) was a publicly available printed publication and because the Office's order is based on a reference not shown to be a printed publication.

The Third Party Requester ["petitioner"] argues in petition 2 that the Patent Owner's November 9th Petition (petition 1) is improper under MPEP § 2646(II) and further provides evidence to substantiate the Martin reference to be a patent or printed publication.

Petition 1

As a procedural matter, the petition was filed under 37 CFR § 1.181, which is reserved for action or requirement of any examiner in the ex parte prosecution of an application, or in ex parte or inter partes prosecution of a reexamination proceeding which is not subject to appeal to the Board of Patent Appeals and Interferences or to the court. However, the MPEP § 2646(II) "PETITION TO VACATE THE ORDER GRANTING REEXAMINATION" clearly states:

> "Where the examiner determines that a reference is a printed publication (i.e., that the criteria for publication has been satisfied), that determination is also **not** petitionable. These matters cannot be questioned with respect to vacating the order granting reexamination until a final agency decision on the reexamination proceeding has issued. Rather, these matters can be **argued** by the patent owner and **appealed** during the examination phase of the reexamination proceeding."

The Office considers petitions to vacate the order granting reexamination as not being properly filed under 37 CFR § 1.181. The petition is therefore **denied**.

Petition 2

Petitioner argues in petition 2 that Patent Owner's November 9th Petition (petition 1) is improper under MPEP § 2646(II) and further provides evidence to substantiate the Martin reference to be a patent or printed publication. In light of the Office's decision with regards to Petition 1 (see above), the petition 2 is **dismissed as moot**.

CONCLUSION

1. The petition filed November 9th, 2011 is denied and the petition filed November 18th, 2011 is dismissed as moot.

2. The most-recent Office action (Order) dated October 31st, 2011, as listed in the statement of facts herein, remains outstanding and patent owner's response is due as set forth in that action.

3. Telephone inquiries related to this decision should be directed to Sudhanshu C. Pathak, Supervisory Patent Examiner, at (571) 272-5509 or in his absence to the undersigned at (571) 272-0700.

Irem Yucel
Director, Central Reexamination Unit

UNITED STATES PATENT AND TRADEMARK OFFICE

UNITED STATES DEPARTMENT OF COMMERCE
United States Patent and Trademark Office
Address: COMMISSIONER FOR PATENTS
P.O. Box 1450
Alexandria, Virginia 22313-1450
www.uspto.gov

APPLICATION NO.	FILING DATE	FIRST NAMED INVENTOR	ATTORNEY DOCKET NO.	CONFIRMATION NO.
95/001,714	08/16/2011	7,490,151 B2	43614.99	3428

22852 7590 03/15/2012

FINNEGAN, HENDERSON, FARABOW, GARRETT & DUNNER LLP
901 NEW YORK AVENUE, NW
WASHINGTON, DC 20001-4413

EXAMINER	
ART UNIT	PAPER NUMBER

DATE MAILED: 03/15/2012

Please find below and/or attached an Office communication concerning this application or proceeding.

UNITED STATES PATENT AND TRADEMARK OFFICE

Commissioner for Patents
United States Patents and Trademark Office
P.O.Box 1450
Alexandria, VA 22313-1450
www.uspto.gov

DO NOT USE IN PALM PRINTER

THIRD PARTY REQUESTER'S CORRESPONDENCE ADDRESS
HAYNES AND BOONE, LLP
IP SECTION
2323 VICTORY AVENUE, SUITE 700
DALLAS, TX 75129

Date: MAILED

MAR 10 2010

CENTRAL REEXAMINATION UNIT

Transmittal of Communication to Third Party Requester
Inter Partes Reexamination

REEXAMINATION CONTROL NO. : 95001714
PATENT NO. : 7490151
TECHNOLOGY CENTER : 3999
ART UNIT : 3992

Enclosed is a copy of the latest communication from the United States Patent and Trademark Office in the above identified Reexamination proceeding. 37 CFR 1.903.

Prior to the filing of a Notice of Appeal, each time the patent owner responds to this communication, the third party requester of the inter partes reexamination may once file written comments within a period of 30 days from the date of service of the patent owner's response. This 30-day time period is statutory (35 U.S.C. 314(b)(2)), and, as such, it cannot be extended. See also 37 CFR 1.947.

If an ex parte reexamination has been merged with the inter partes reexamination, no responsive submission by any ex parte third party requester is permitted.

All correspondence relating to this inter partes reexamination proceeding should be directed to the Central Reexamination Unit at the mail, FAX, or hand-carry addresses given at the end of the communication enclosed with this transmittal.

UNITED STATES PATENT AND TRADEMARK OFFICE

Commissioner for Patents
United States Patent and Trademark Office
P.O. Box 1450
Alexandria, VA 22313-1450
www.uspto.gov

MCDERMOTT WILL & EMERY
600 13TH STREET, NW
WASHINGTON, DC 20005-3096

(For Patent Owner)

MAILED
MAR 15 2012
CENTRAL REEXAMINATION UNIT

SIDLEY AUSTIN LLP
717 NORTH HARWOOD
SUITE 3400
DALLAS, TX 75201

(For the '1697 Requester)

HAYNES AND BOONE, LLP
IP SECTION
2323 VICTORY AVENUE
SUITE 700
DALLAS, TX 75219

(For the '1714 Requester)

Inter Partes Reexamination Proceeding
Control No. 95/001,697
Filed: July 25, 2011
For: U.S. Patent No. 7,490,151

Inter Partes Reexamination Proceeding
Control No. 95/001,714
Filed: August 16, 2011
For: U.S. Patent No. 7,490,151

DECISION *SUA SPONTE* MERGING REEXAMINATION PROCEEDINGS

The above-captioned reexamination proceedings are before the Office of Patent Legal Administration for *sua sponte* consideration of whether the proceedings should be merged (consolidated) at this time.

PATENT OWNER'S ADDRESS

Different patent owner addresses are of record for the patent and the two reexamination proceedings. On November 1, 2011, patent owner filed, in the 95/001,714 proceeding, a "REVOCATION OF POWER OF ATTORNEY, STATEMENT UNDER 37 C.F.R. § 3.73(b), AND GRANT OF NEW POWER OF ATTORNEY FOR REEXAMINATION CONTROL NO. 95/001,714 ONLY" stating:

> The undersigned representative of the Assignee hereby grants its power of attorney to the patent practitioners associated with FINNEGAN, HENDERSON, FARABOW, GARRETT & DUNNER, L.L.P., Customer Number 22,852, to prosecute only reexamination proceeding with control no. 95/001,714 and to transact all business in the Patent and Trademark Office connected therewith. Power of attorney and tile mailing address for all other aspects of the '151 patent shall remain unchanged.
>
> Please send all future correspondence concerning reexamination proceeding with control no. 95/001,714 to Finnegan, Henderson, Farabow, Garrett & Dunner, L.L.P., Customer No. 22,852.

The patent owner's November 1, 2011 paper was not effective to change the correspondence address of record for the '1724 proceeding. See *Revisions and Technical Corrections Affecting Requirements for Ex Parte and Inter Partes Reexamination*, 72 Fed. Reg. 18892 (April 16, 2007) (final rule) (stating, "The correspondence address for any pending reexamination proceeding not having the same correspondence address as that of the patent is, by way of this revision to § 1.33(c), automatically changed to that of the patent file..."). The current correspondence address of record for the patent file is the proper patent owner address for reexamination mailings pursuant to 37 CFR 1.33(c), and it is that of McDermott Will & Emery, 600 13th Street, NW, Washington, DC 20005-3096.

Accordingly, all future correspondence will be directed to, and service on patent owner should also be directed to, McDermott Will & Emery, 600 13th Street, NW, Washington, DC 20005-3096. A courtesy copy of the instant decision and a courtesy copy of a decision on patent owner's November 9, 2011 petition, mailed on even date herewith, are being provided to the address specified in patent owner's November 1, 2011 paper.

REVIEW OF RELEVANT FACTS

1. On February 10, 2009, U.S. Patent No. 7,490,151 (the '151 patent) issued to Munger et al. with 16 claims.

2. On July 25, 2011, a first request for *inter partes* reexamination of claims 1-16 of the '151 patent was filed by a third party requester and assigned Reexamination Control No. 95/001,697 ("the '1697 proceeding"). The request identified Apple Inc., ("the '1697 requester") as the real party in interest.

3. On August 16, 2011, a second request for *inter partes* reexamination of claims 1-16 of the '151 patent was filed by a third party requester and assigned Reexamination Control No. 95/001,714 ("the '1714 proceeding"). The request identified Cisco Systems, Inc. ("the '1714 requester") as the real party in interest.

4. On October 21, 2011, *inter partes* reexamination was ordered on claims 1-16 of the '151 patent in the '1697 proceeding. An Office action was not concurrently issued in the

proceeding. The order indicated that an Office action would issue in due course.

5. On October 31, 2011, *inter partes* reexamination was ordered on claims 1-16 of the '151 patent in the '1714 proceeding. An Office action was not concurrently issued in the proceeding. The order indicated that an Office action would issue in due course.

6. On November 9, 2011, patent owner filed, in the '1714 proceeding, a petition under 37 CFR 1.182 entitled "PETITION TO SUSPEND AND NOT MERGE *INTER PARTES* REEXAMINATION" and, on November 18, 2011, the '1714 requester filed an opposition entitled "PETITION UNDER 1.182 TO OPPOSE PATENT OWNER'S PETITION TO SUSPEND AND NOT MERGE."

7. To date, no Office action has issued in either the '1697 or the '1714 *inter partes* proceeding.

8. A decision dismissing patent owner's November 9, 2011 petition under 37 CFR 1.182, and addressing the '1714 requester's opposition thereto, is being mailed on even date herewith.

DECISION

I. MERGER OF PROCEEDINGS

Reexamination is ordered in the two above-captioned proceedings for the same claims of the same patent. Both proceedings are *inter partes* reexamination proceedings. Both proceedings are still pending, and have not been terminated. Therefore, consideration of merger is ripe at this point in time.

37 CFR 1.989 provides:

> (a) If any reexamination is ordered while a prior *inter partes* reexamination proceeding is pending for the same patent and prosecution in the prior *inter partes* reexamination proceeding has not been terminated, a decision may be made to merge the two proceedings or to suspend one of the two proceedings. Where merger is ordered, the merged examination will normally result in the issuance and publication of a single reexamination certificate under § 1.997.

The 95/001,697 and 95/001,714 *inter partes* proceedings are merged. The merged proceeding will be conducted in accordance with the guidelines and requirements that follow.

II. THE SAME CLAIMS MUST BE MAINTAINED IN BOTH PROCEEDINGS

Presently, the claims (and specification) are identical in both files. Patent owner is required to continue to maintain the same claims (and specification) in both files *throughout the merged proceeding*.

III. CONDUCT OF MERGED PROCEEDING

A. Governing regulations for the merged proceeding:

The present decision merges two *inter partes* reexamination proceedings. Pursuant to 37 CFR 1.989(b), the merged proceeding is governed by 37 CFR §§ 1.902 through 1.997. Pursuant to 37 CFR 1.989(a), the merged examination will normally result in the issuance and publication of a single reexamination certificate under 37 CFR 1.997.

B. *Inter partes* Third Party Requester Participation:

1. Comment rights:

Upon merger of proceedings all *inter partes* requesters can comment pursuant to 35 U.S.C. 314(b)(2).[1] First, an *inter partes* requesters' right to comment is contingent upon the patent owner responding to, or commenting on, an Office action. Second, an *inter partes* requesters' right to comment is limited to issues raised in either the Office action or the patent owner's response to the action. Finally, the *inter partes* requesters' comments must be submitted within the statutory time period of 30 days from date of service of patent owner's response.

No *inter partes* requester has a right to comment on any issue raised outside the confines of the statute, e.g. issues raised in a previous Office action (but not raised in the most recent Office action or response) or the request and comments from another requester.

2. Appeal Rights:

The *inter partes* reexamination procedures for taking appeal, and for participating in the patent owner's appeal, are explained in MPEP 2674 through 2675.02, 2678 through 2683. As pointed out in MPEP 2674:

> A notice of appeal by a third party requester must identify each rejection *that was previously proposed by that third party requester* which the third party requester intends to contest. It is not sufficient to merely appeal from the allowance of a claim (i.e., the examiner's finding of a claim patentable); the third party requester must identify each previously proposed rejection to be contested.

Thus, each *inter partes* reexamination requester's appeal must only be taken from the finding(s) of patentability of claims in the RAN that the individual third party requester proposed in the request, and any that the individual third party requester properly added during the examination stage of the merged proceeding. Also, as provided by 37 CFR 41.67(c)(1)(vi):

---

[1] Each time that the patent owner files a response to an action on the merits from the Patent and Trademark Office, the third-party requester shall have one opportunity to file written comments addressing issues raised by the action of the Office or the patent owner's response thereto, if those written comments are received by the Office within 30 days after the date of service of the patent owner's response.

> No new ground of rejection can be proposed by a third party requester appellant, unless such ground was withdrawn by the examiner during the prosecution of the proceeding, and the third party requester has not yet had an opportunity to propose it as a third party requester proposed ground of rejection.

Thus, the appellant's brief shall present a concise statement of each issue. And, no new ground of rejection (i.e., a ground that the individual requester did not propose) can be proposed by a third party requester appellant, unless that ground was withdrawn by the examiner during the prosecution of the proceeding, and the third party requester did not yet have an opportunity to propose it as a third party requester proposed ground of rejection.

C. Papers mailed/filed:

All papers mailed by the Office throughout the merged proceeding will take the form of a single action which applies to all proceedings. All papers issued by the Office, or filed by the patent owner and the third party requesters, will contain the identifying data for all proceedings and will be physically entered in each reexamination file. All papers filed by the patent owner and the third party requesters must consist of a single paper, **filed in duplicate**, each bearing a signature and identifying data for all files, for entry into each file.

All papers filed by patent owner and the third party requesters should be directed as follows:

by Mail to:	Attn: Mail Stop "Inter Partes Reexam" Central Reexamination Unit Commissioner for Patents P.O. Box 1450 Alexandria, VA 22313-1450
by FAX to:	(571) 273-9900 Central Reexamination Unit
by Hand to:	Customer Service Window Attn: Central Reexamination Unit Randolph Building, Lobby Level 401 Dulany Street Alexandria, VA 22314
by EFS:	Registered users may submit papers via the electronic filing system EFS-Web, at: https://efs.uspto.gov/authenticate/AuthenticateUserLocalEPF.html

Patent owner and requesters are reminded that every paper filed in the merged proceeding subsequent to this decision must be served on all the other parties, and every paper filed must reflect that such paper was served on all the other parties, pursuant to 37 CFR 1.903. All papers are to be addressed to the Central Reexamination Unit as provided above.

D. Amendments:

The filing of any amendments to the drawings, specification or claims must comply with 37 CFR 1.943, which incorporates the provisions of 37 CFR 1.530, and the guidelines of MPEP § 2666.01, which in turn references the guidelines of MPEP § 2250.

37 CFR 1.121 does not apply to amendments in reexamination. Accordingly, clean copies of the amended claims are not required and are not to be submitted; rather amendments are to be presented via markings pursuant to paragraph 37 CFR 1.530(f), except that a claim should be canceled by a statement canceling the claim, without presentation of the text of the claim.

Pursuant to 37 CFR 1.530(i), all amendments must be made relative to the patent specification, including the claims, and drawings, which are in effect as of the date of filing the request for reexamination. *Amendments are not to be made relative to previous amendments.* Thus, for all amendments, all words not appearing in the patent are always underlined, and only words being deleted from the patent appear in brackets.

E. Fees:

Where a paper is filed that requires payment of a fee (e.g., petition fee, excess claims fee, extension of time fee, appeal fee, brief fee, oral hearing fee), only a single fee need be paid. For example, only one fee need be paid for any patent owner's appellant brief (or that of an *inter partes* reexamination requester) which may be filed, even though the brief relates to merged multiple proceedings, and copies must be filed (as pointed out above) for each file in the merged proceeding.

F. Citation of Patents and Printed Publications:

Upon return of the present merged proceeding to the examiner, the examiner will review the files to ensure that each file contains identical citations of prior patents and printed publications, and will cite such documents as are necessary as part of the next action in order to place the files in that condition.

G. Appeal Procedure Reminders for *Inter Partes* Reexamination:

The parties are reminded of the procedures for taking appeal in an *inter partes* reexamination as explained in MPEP 2674 and 2675. The appeal must only be taken from (1) the rejection(s) of the claims in the Right of Appeal Notice (RAN) that the *patent owner* proposes to contest, or (2) the finding(s) of patentability of claims in the RAN that the *third party requester* proposes to contest. Therefore, in the notice of appeal, the patent owner must identify each claim rejected by examiner that the patent owner intends to contest and the third party requester must identify each rejection *that was previously proposed by that third party requester* that the third party requester intends to contest. (37 CFR 41.61) No new ground of rejection (including one proposed by another requester, but not the appellant requester) can be proposed by a third party requester appellant, unless such ground was withdrawn by the examiner during the prosecution of the proceeding, and the third party requester has not yet had an opportunity to propose it as a third

party requester proposed ground of rejection. See 37 CFR 41.67(c)(1)(vi) as to the proposed rejections that each individual requester can challenge in the appellant brief.

CONCLUSION

1. *Inter partes* Reexamination Control Nos. 95/001,697, and 95/001,714 are merged into a single proceeding, to be conducted in accordance with the procedure set forth above in Part III of this decision.

2. Telephone inquiries related to the present decision should be directed to Nicole D. Haines, Legal Advisor, at 571-272-7717 or to the undersigned at 571-272-7726.

Pinchus M. Laufer
Senior Legal Advisor
Office of Patent Legal Administration

March 14, 2012

cc: Finnegan, Henderson, Farabow, Garrett & Dunner LLP
901 New York Avenue, NW
Washington, DC 20001-4413

UNITED STATES PATENT AND TRADEMARK OFFICE

UNITED STATES DEPARTMENT OF COMMERCE
United States Patent and Trademark Office
Address: COMMISSIONER FOR PATENTS
P.O. Box 1450
Alexandria, Virginia 22313-1450
www.uspto.gov

APPLICATION NO.	FILING DATE	FIRST NAMED INVENTOR	ATTORNEY DOCKET NO.	CONFIRMATION NO.
95/001,714	08/16/2011	7,490,151 B2	43614.99	3428

22852 7590 03/15/2012

FINNEGAN, HENDERSON, FARABOW, GARRETT & DUNNER LLP
901 NEW YORK AVENUE, NW
WASHINGTON, DC 20001-4413

EXAMINER	
ART UNIT	PAPER NUMBER

DATE MAILED: 03/15/2012

Please find below and/or attached an Office communication concerning this application or proceeding.

UNITED STATES PATENT AND TRADEMARK OFFICE

Commissioner for Patents
United States Patents and Trademark Office
P.O.Box 1450
Alexandria, VA 22313-1450
www.uspto.gov

DO NOT USE IN PALM PRINTER

THIRD PARTY REQUESTER'S CORRESPONDENCE ADDRESS

HAYNES AND BOONE, LLP
IP SECTION
2323 VICTORY AVENUE, SUITE 700
DALLAS, TX 75129

Date:

MAILED

MAR 15 20

CENTRAL REEXAMINATION UNIT

Transmittal of Communication to Third Party Requester
Inter Partes Reexamination

REEXAMINATION CONTROL NO. : 95001714
PATENT NO. : 7490151
TECHNOLOGY CENTER : 3999
ART UNIT : 3992

Enclosed is a copy of the latest communication from the United States Patent and Trademark Office in the above identified Reexamination proceeding. 37 CFR 1.903.

Prior to the filing of a Notice of Appeal, each time the patent owner responds to this communication, the third party requester of the inter partes reexamination may once file written comments within a period of 30 days from the date of service of the patent owner's response. This 30-day time period is statutory (35 U.S.C. 314(b)(2)), and, as such, it cannot be extended. See also 37 CFR 1.947.

If an ex parte reexamination has been merged with the inter partes reexamination, no responsive submission by any ex parte third party requester is permitted.

All correspondence relating to this inter partes reexamination proceeding should be directed to the Central Reexamination Unit at the mail, FAX, or hand-carry addresses given at the end of the communication enclosed with this transmittal.

UNITED STATES PATENT AND TRADEMARK OFFICE

Commissioner for Patents
United States Patent and Trademark Office
P.O. Box 1450
Alexandria, VA 22313-1450
www.uspto.gov

MCDERMOTT WILL & EMERY
600 13TH STREET, NW
WASHINGTON, DC 20005-3096

(For Patent Owner)

MAILED

MAR 15 2012

CENTRAL REEXAMINATION UNIT

HAYNES AND BOONE, LLP
IP SECTION
2323 VICTORY AVENUE
SUITE 700
DALLAS, TX 75219

(For the '1714 Requester)

Inter Partes Reexamination Proceeding
Control No. 95/001,714
Filed: August 16, 2011
For: U.S. Patent No. 7,490,151

: **DECISION**
: **DIMISSING**
: **PETITION**

This is a decision on patent owner's "PETITION TO SUSPEND AND NOT MERGE *INTER PARTES* REEXAMINATION" ("the petition under 37 CFR 1.182"), filed on November 9, 2011. This decision also addresses third party requester's "PETITION UNDER 1.182 TO OPPOSE PATENT OWNER'S PETITION TO SUSPEND AND NOT MERGE" ("the opposition"), filed on November 18, 2011.

The patent owner petition under 37 CFR 1.182 is dismissed for the reasons set forth herein.

BACKGROUND

1. On February 10, 2009, U.S. Patent No. 7,490,151 (the '151 patent) issued to Munger et al. with 16 claims.

2. On July 25, 2011, a first request for *inter partes* reexamination of claims 1-16 of the '151 patent was filed by a third party requester and assigned Reexamination Control No. 95/001,697 ("the '1697 proceeding"). The request identified Apple Inc., ("the '1697 requester", also referred to herein as "Apple") as the real party in interest.

3. On August 16, 2011, a second request for *inter partes* reexamination of claims 1-16 of the '151 patent was filed by a third party requester and assigned Reexamination Control No. 95/001,714 ("the '1714 proceeding"). The request identified Cisco Systems, Inc. ("the '1714 requester", also referred to herein as "Cisco") as the real party in interest.

4. On October 21, 2011, *inter partes* reexamination was ordered on claims 1-16 of the '151 patent in the '1697 proceeding. An Office action was not concurrently issued in the proceeding. The order indicated that an Office action would issue in due course.

5. On October 31, 2011, *inter partes* reexamination was ordered on claims 1-16 of the '151 patent in the '1714 proceeding. An Office action was not concurrently issued in the proceeding. The order indicated that an Office action would issue in due course.

6. On November 9, 2011, patent owner filed the instant petition under 37 CFR 1.182 in the '1714 proceeding.

7. On November 18, 2011, the '1714 requester filed the instant opposition to the patent owner's petition under CFR 1.182 in the '1714 proceeding.

8. To date, no Office action has issued in either the '1697 or the '1714 *inter partes* proceeding.

9. A decision *sua sponte* merging the '1697 and '1714 proceedings is being mailed on even date herewith.

DECISION

I. Patent owner's petition under 37 CFR 1.182

In the instant petition under 37 CFR 1.182, patent owner (also referred to herein as "VirnetX") requests that the Office suspend the '1714 proceeding "because it appears that Cisco initiated a second *inter partes* reexamination of the '151 patent soon after Apple to harass VirnetX."[1] In particular, patent owner asserts that, as co-defendants in concurrent district court litigation initiated by patent owner, "[b]oth Cisco and Apple ... were clearly aware of at least some of the prior art now asserted by Cisco in its request for reexamination."[2] Additionally, patent owner asserts that "Apple filed its request for reexamination, before Cisco, relying on six references totally different from those it identified with Cisco in the district court litigation," and that "Cisco appears to have waited for Apple to file its request for reexamination before initiating a second reexamination of the '151 patent relying primarily on the references Cisco and Apple jointly identified in the district court litigation."[3] Accordingly, patent owner asserts that "[t]hese facts appear to suggest that Cisco and Apple ... chose not to assert all the prior art they were aware of in district court but instead chose to file two separate *inter partes* reexaminations within a few days of each other to harass VirnetX," such that suspension of the '1714 proceeding is appropriate pursuant to MPEP 2640(II)(A).[4]

---

[1] Petition under 37 CFR 1.182 at page 3.
[2] Id. at page 4.
[3] Id.
[4] Id.

In the alternative, patent owner requests that the Office not merge the "Apple-initiated" '1697 proceeding and the "Cisco-initiated" '1714 proceeding.[5] Patent owner also requests, should the Office merge the '1697 and the '1714 proceedings, that the Office "instruct Cisco and Apple that each may only comment on and participate in an appeal from only those issues that it raised in its own request for reexamination."[6]

II. The '1714 requester's opposition

In the instant opposition, third party requester asserts that patent owner's petition under 37 CFR 1.182 is an unauthorized paper in the '1714 proceeding under 37 CFR 1.939(b) because it was filed prior to the initial Office action on the merits.[7] Additionally, the '1714 requester asserts that the patent owner's petition under 37 CFR 1.182 is improper under 37 CFR 1.4(c) because it combines three separate matters into a single petition.[8]

Further, the '1714 requester asserts that, should the Office consider the merits of the patent owner's petition to suspend the '1714 proceeding, the petition should be denied because the petition "is simply devoid of any evidence, explanation or analysis to support the allegation of harassment."[9] In particular, the '1714 requester asserts that "[t]he Patent Owner's petition effectively suggests that only one defendant at a time may pursue inter partes reexamination of a patent in litigation," and that "such a policy would run counter to the reexamination statutes, which permit '***Any*** third-party requester at any time may file a request for inter partes reexamination.'"[10] Further, the '1714 requester asserts that "if the Patent Office were to suspend the present proceeding until completion of the reexamination initiated by Apple, it could have the effect of denying Cisco of its opportunity to challenge the '151 patent's validity in reexamination."[11]

Regarding patent owner's request for no merger of the '1697 and the '1714 proceedings, contrary to patent owner's assertion that "conducting two separate reexamination proceedings would assist the Patent Office in fulfilling its mandate for 'special dispatch,'" the '1714 requester asserts that "consolidating the issues into a single merged proceeding is likely to make the most efficient use of the Office's resources."[12] Finally, the '1714 requester asserts that the patent owner's request regarding the comment rights of the third party requesters of a merged proceeding is contrary to 35 USC 314(b)(2), "which provides the third-party requester with 'one opportunity to file written comments addressing issues raised by the action of the Office of the patent owner's response thereto.'"[13]

---

[5] Id. at page 5.
[6] Id. at page 6.
[7] Opposition at pages 2-3.
[8] Id. at pages 3-4.
[9] Id. at page 4.
[10] Id. at page 5 (citing 35 USC 311(a)).
[11] Id.
[12] Id. at page 6.
[13] Id.

III. Findings and Analysis

In the instant petition under 37 CFR 1.182, patent owner requests suspension of the '1714 proceeding on the basis that the request for reexamination in the '1714 proceeding was filed for purposes of harassment. MPEP 2640(II)(A) provides, in-part (emphasis added):

> Where reexamination is granted on a second or subsequent request, but the patent owner can clearly show that the second or subsequent request was filed for purposes of harassment, the patent owner ***can petition*** under 37 CFR 1.182 that the second or subsequent request should be suspended. If such a petition is granted, prosecution on the second or subsequent reexamination would be suspended until conclusion of proceedings in the first reexamination. In such an instance, merger of the second (or subsequent) reexamination with the first would unduly prolong the conclusion of the pending reexamination and be inconsistent with the requirement that the reexamination proceeding be conducted with special dispatch.

As a preliminary matter, the instant patent owner petition under 37 CFR 1.182, requesting suspension of the '1714 proceeding on the basis that the '1714 proceeding was filed for purposes of harassment, is not an improper paper under 37 CFR 1.939. MPEP 2640(II)(A) expressly authorizes such petition can be filed where reexamination is granted in a proceeding which patent owner contends was filed for purposes of harassment.

Regarding the propriety of Cisco's request for reexamination of the '151 patent in the '1714 proceeding, 35 USC 311(a) provides that "[a]ny third-party requester at any time may file a request for inter partes reexamination by the Office of a patent on the basis of any prior art cited under the provisions of section 301."[14] Thus, Cisco is not precluded from filing a request for *inter partes* reexamination of the '151 where a co-defendant in concurrent infringement litigation initiated by patent owner already filed a request for *inter partes* reexamination of the '151 patent.[15] The filing of Cisco's request is permitted by the *inter partes* reexamination statutes and, therefore, on its face, does not clearly show harassment. Additionally, contrary to patent owner's assertion, the filing of Cisco's request for *inter partes* reexamination of the '151 patent in the '1714 proceeding less than one month after the filing of Apple's request in the '1697 proceeding should benefit patent owner by enabling patent owner to address all of the patentability issues raised in both requests together in a timely fashion. Under the facts and circumstances in this instance, it would be more efficient for both the patent owner and the Office to resolve the patentability issues raised in both requests together as opposed to, for example, had Cisco waited until the conclusion of Apple's '1697 proceeding to file its request in the '1714 proceeding.

---

[14] See also 37 CFR 1.913 (providing, "Except as provided for in § 1.907, any person other than the patent owner or its privies may, at any time during the period of enforceability of a patent which issued from an original application filed in the United States on or after November 29, 1999, file a request for *inter partes* reexamination by the Office of any claim of the patent on the basis of prior art patents or printed publications cited under § 1.501.").

[15] There are no allegations that any of the estoppel provisions would apply in this instance.

Further, MPEP 2642 provides that reexamination of a patent which has previously undergone a reexamination proceeding is permitted where the subsequent request independently provides an SNQ which is different from that raised in the pending reexamination for the claims in effect at the time of the determination.[16] This requirement, that a subsequent request for reexamination contain a new SNQ, provides a safeguard against harassment of the patent owner. As set forth in the October 21, 2011 order granting reexamination in the '1697 proceeding, the examiner has found that Apple's request in the '1697 proceeding for reexamination of the '151 patent raises SNQs, and as set forth in the October 31, 2011 order granting reexamination in the '1714 proceeding, the examiner has found that Cisco's request in the '1714 proceeding for reexamination of the '151 patent also raises SNQs. Whether Apple had been aware of the art that Cisco presented in its request in the '1714 proceeding at the time Apple filed its request in the '1697 proceeding does not clearly show Cisco's request was filed for purposes of harassment where both requests raised SNQs. Therefore, on this record, patent owner has not presented facts clearly showing that Cisco's request for *inter partes* reexamination of the '151 patent in the '1714 proceeding was filed for purposes of harassment and patent owner's November 9, 2011 petition under 37 CFR 1.182 is dismissed.

Patent owner's alternative request not to merge the '1697 and the '1714 proceedings is being treated as a notification of concurrent proceedings pursuant to 37 CFR 1.985(a) and MPEP 2686. As set forth in MPEP 2686.01(I), decisions to merger or not to merger co-pending reexamination proceedings is at the sole discretion of the Office:

> Where a second request for reexamination is filed and reexamination is ordered, and a first reexamination proceeding is pending, the proceedings will be merged where the Office (in its discretion) deems it appropriate to do so, to facilitate the orderly handling of the proceedings. However, a decision not to merge is within the sole discretion of the Office to facilitate/carry out the statutory mandate of 35 U.S.C. 314(c) to conduct reexamination proceedings with "special dispatch".

In this instance, the Office is exercising its discretion by mailing, on even date herewith, a decision *sua sponte* merging the '1697 and the '1714 proceedings. The merger decision explicitly sets forth the participation rights of the parties to the merged proceeding.

CONCLUSION

1. Patent owner's November 9, 2011 petition under 37 CFR 1.182 is dismissed.

---

[16] See MPEP 2642(I) (stating "However, in order for the second or subsequent request for reexamination to be granted, the second or subsequent requester must independently provide a substantial new question of patentability which is different from that raised in the pending reexamination for the claims in effect at the time of the determination. ... If a "different" substantial new question of patentability is not provided by the second or subsequent request for the claims in effect at the time of the determination, the second or subsequent request for reexamination must be denied since the Office is only authorized by statute to grant a reexamination proceeding based on a substantial new question of patentability "affecting any claim of the patent." See 35 U.S.C. 312. Accordingly, there must be at least one substantial new question of patentability established for the existing claims in the patent in order to grant reexamination.).

2. Telephone inquiries related to the present decision should be directed to Nicole D. Haines, Legal Advisor, at 571-272-7717 or to the undersigned at 571-272-7726.

Pinchus M. Laufer
Senior Legal Advisor
Office of Patent Legal Administration

March 14, 2012

cc: Finnegan, Henderson, Farabow, Garrett & Dunner LLP
901 New York Avenue, NW
Washington, DC 20001-4413

UNITED STATES PATENT AND TRADEMARK OFFICE

UNITED STATES DEPARTMENT OF COMMERCE
United States Patent and Trademark Office
Address: COMMISSIONER FOR PATENTS
P.O. Box 1450
Alexandria, Virginia 22313-1450
www.uspto.gov

APPLICATION NO.	FILING DATE	FIRST NAMED INVENTOR	ATTORNEY DOCKET NO.	CONFIRMATION NO.
95/001,718	08/18/2011	Gail K. Donaldson	GEVO-055/01US 310142-2210	7163

23906 7590 03/05/2012

EXAMINER

E I DU PONT DE NEMOURS AND COMPANY
LEGAL PATENT RECORDS CENTER
BARLEY MILL PLAZA 25/1125
4417 LANCASTER PIKE
WILMINGTON, DE 19805

ART UNIT	PAPER NUMBER

DATE MAILED: 03/05/2012

Please find below and/or attached an Office communication concerning this application or proceeding.

UNITED STATES PATENT AND TRADEMARK OFFICE

Commissioner for Patents
United States Patents and Trademark Office
P.O.Box 1450
Alexandria, VA 22313-1450
www.uspto.gov

DO NOT USE IN PALM PRINTER

THIRD PARTY REQUESTER'S CORRESPONDENCE ADDRESS
COOLEY LLP
ATTN: PATENT GROUP
777 6th STREET, NW SUITE 1100
WASHINGTON, DC 20001

Date:
MAILED
MAR 05 2012
CENTRAL REEXAMINATION UNIT

Transmittal of Communication to Third Party Requester
Inter Partes Reexamination

REEXAMINATION CONTROL NO. : 95001718
PATENT NO. : 7851188
TECHNOLOGY CENTER : 3999
ART UNIT : 3991

Enclosed is a copy of the latest communication from the United States Patent and Trademark Office in the above identified Reexamination proceeding. 37 CFR 1.903.

Prior to the filing of a Notice of Appeal, each time the patent owner responds to this communication, the third party requester of the inter partes reexamination may once file written comments within a period of 30 days from the date of service of the patent owner's response. This 30-day time period is statutory (35 U.S.C. 314(b)(2)), and, as such, it cannot be extended. See also 37 CFR 1.947.

If an ex parte reexamination has been merged with the inter partes reexamination, no responsive submission by any ex parte third party requester is permitted.

All correspondence relating to this inter partes reexamination proceeding should be directed to the Central Reexamination Unit at the mail, FAX, or hand-carry addresses given at the end of the communication enclosed with this transmittal.

UNITED STATES PATENT AND TRADEMARK OFFICE

Commissioner for Patents
United States Patent and Trademark Office
P.O. Box 1450
Alexandria, VA 22313-1450
www.uspto.gov

(For Patent Owner)

E I DU PONT DE NEMOURS AND COMPANY
LEGAL PATENT RECORDS CENTER
BARLEY MILL PLAZA 25/1125
4417 LANCASTER PIKE
WILMINGTON, DE 19805

MAILED

MAR 05 2012

CENTRAL REEXAMINATION UNIT

(For Requester)

COOLEY LLP
ATTN: PATENT GROUP
777 6th STREET, NW SUITE 1100
WASHINGTON, DC 20001

In re Donaldson et al.	:
Reexamination Proceeding	: DECISION ON
Control No. 95/001,718	: PETITION UNDER
Filed: August 18, 2011	: 37 CFR 1.181
For: U.S. Patent No. 7,851,188	:

The third party Requester filed a paper on November 28, 2011, entitled "PETITION UNDER 37 C.F.R. §§ 1.927 AND 1.181 FOR SUPERVISORY REVIEW OF REFUSAL TO ORDER REEXAMINATION FOR CLAIMS 1-3, 13-15, 17-24, AND 34-37" (hereinafter the petition). The petition is before the Director of the Central Reexamination Unit (CRU). Petitioner, the reexamination requester, seeks review of the Order Denying Request for *Inter Partes* Reexamination mailed October 27, 2011. Specifically, petitioner requests that the CRU Director find that a substantial new question of patentability exists based upon the references cited.

The Petition is **DENIED**.

REVIEW OF FACTS

1. U.S. Patent No. 7,851,188 (hereinafter, the '188 patent) issued on December 14, 2010.

2. A request for *inter partes* reexamination was filed on August 18, 2011. The resulting reexamination proceeding was assigned Control No. 95/001,718. Reexamination was requested for claims 1-3, 13-15, 17-24 and 34-37 of the '188 patent.

3. A Notice of Reexamination Request Filing Date was issued on October 5, 2011.

4. An order denying the request for reexamination was mailed on October 27, 2011.

5. On November 28, 2011, the third party requester filed the present petition under 37 CFR § 1.181.

Petitioner's Grounds in Support of the Requested Relief

Petitioner (the third party requester) alleges that the examiner's denial of the request for reexamination is improper because the Request presents substantial new questions of patentability (SNQs).[1]

DECISION

I. Standard of Review

35 USC § 312(c) and 37 CFR 1.927 provide for the filing of a petition to review an examiner's determination refusing to order inter partes reexamination. The CRU Director's review of the reexamination request on petition is *de novo*. Therefore, the review will determine whether the examiner's refusal to order reexamination for claims 1-3, 13-15, 17-24 and 34-37 was correct, and will not necessarily indicate agreement or disagreement with every aspect of the examiner's rationale for the denial of the request to order reexamination for claims 1-3, 13-15, 17-24 and 34-37 of the '188 patent. Consideration is limited to whether the cited patents and printed publications raise a substantial new question of patentability to patent claims 1-3, 13-15, 17-24 and 34-37. The review will not consider evidence not of record at the time of the request for reexamination (e.g., evidence made of record for the first time in the petition) nor any additional SNQs proposed for the first time in the petition.

II. The Legal Standard for Ordering Reexamination

---

[1] The filing date for the request is August 18, 2011, which is prior to the passage of the America Invents Act. Therefore, the standard for granting a reexamination is whether a substantial new question (SNQ) of patentability exists for at least one claim.

A review of 35 USC 311-317 and 37 CFR 1.915, 1.919, and 1.923, prior to changes to implement the America Invents Act, showed that inter partes reexamination of a United States Patent is only authorized when a consideration of prior art consisting of patents or printed publications establishes that a substantial new question of patentability exists with respect to one or more claims of that patent. In particular, 35 USC 311(a) requires that a request for inter partes reexamination be based upon prior art as set forth in 35 USC 301, that is, prior art consisting of patents or printed publications, while 37 CFR 1.915(b)(3) required that a request for inter partes reexamination include "a statement pointing out each substantial new question of patentability based on the cited patents and printed publications." A substantial question of patentability is raised by a cited patent or printed publication when there is a substantial likelihood that a reasonable examiner would consider the prior art patent or printed publication important in deciding whether or not the claim is patentable. If the prior art patents and printed publications relied upon in the request raise a substantial question of patentability, then a "substantial new question of patentability" is present, unless the same question of patentability has already been decided by a final holding of invalidity after all appeals, or by the Office in a previous examination or in a reexamination of a patent.

In accordance with this legislative history for the original reexamination statute,[2] MPEP 2642, part II.A., was drafted to require, in order to raise a SNQ for old art, that the old art must be "presented/viewed in a new light, or in a different way, as compared with its use in the earlier examination(s), in view of a material new argument or interpretation presented in the request." This new light must be in terms of how to interpret the state of the "pre-existing technology," as was envisioned by the authors of the original reexamination statute, and left unchanged by the 2002 enactment. For example, a reference may be read in a "new light" if the requester draws attention to a portion of the reference that was not relied upon, or otherwise addressed, in a rejection during the earlier concluded examination of the patent for which reexamination is requested. Similarly, a reference may be interpreted in a new light, or in a different way, by defining a term of art used in the reference, where the definition of the term of art had not been previously presented in the earlier concluded examination of the patent. If a substantial new question of patentability is found, an order for inter partes reexamination of the patent is issued. An SNQ is not raised by the old prior art if the Office has previously considered (in an earlier examination of the patent) the same question of patentability as to the patent and has decided that question in favor of the patent owner based on the same prior art patents or printed publications. In re Recreative Technologies, 83 F.3d 1394, 38 USPQ2d 1776 (Fed. Cir. 1996).

III. Analysis of the Request for Reexamination

---

[2] Public Law 96-517, enacted on December 12, 1980.

Requester considers claims 1-3, 13-15, 17-24 and 34-37 unpatentable over the combination of Yocum and Smit, further combined with one or more of Hansen, Boulton, Renna, Petersen, Laffend, Nakamura and Larroy.
Yocum discloses a method for production of pantothenate by fermentation using genetically engineered microbes. The pathway for pantothenate production includes the first three enzymes recited in claim 1 of the '188 patent. Yocum does not mention isobutanol or isobutyraldehyde.

Smit is concerned with the production of flavor components in cheese. Smit determined that formation of 3-methylbutanal is the rate limiting step for production of aldehydes which impart flavor. Smit tested a number of bacterial strains and found only two having decarboxylase activity necessary for producing this compound. Smit suggests using these strains to make cheese, in order to achieve more rapid flavor development. A gene encoding a branched chain α-keto acid decarboxylase, the fourth enzyme recited in claim 1 of the '188 patent, was cloned and the enzyme activity was characterized.

Hansen and Boulton each teach that in brewer's yeast α-keto isovalerate is converted to isobutyraldehyde, which is then converted to isobutanol.

Renna cloned the acetolactate synthase gene from Bacillus subtilis.

Petersen cloned the gene encoding acetohydroxy acid isomeroreductase in brewer's yeast.

Laffend and Nakamura each teach production of 1,3 propanediol by genetically engineered E. coli.

Larroy characterized an alcohol dehydrogenase gene of brewer's yeast.

Even though the prior art teachings are not cumulative, the cited prior art would not be important to a reasonable examiner in deciding whether any claim of the '188 patent is patentable because there is no suggestion to engineer microorganisms to produce isobutanol. Yocum is concerned with production of pantothenate. Hansen and Boulton teach that brewer's yeast produces some amount of isobutanol, but neither reference indicates that increased isobutanol is desired in beer or that a brewer would wish to increase its production. High levels of isobutanol are also not desirable in cheese. To the extent that Smit might be seen as advocating the increased, or more rapid, production of flavor compounds, the suggested solution is to use bacterial strains which naturally possess the desired enzymes, not to genetically engineer bacteria. The remaining references likewise fail to suggest genetically engineering microorganisms to produce isobutanol.

The fact that the references teach that all aspects of the claimed invention were individually known in the art is not sufficient to establish a prima facie case of

obviousness without some objective reason to combine the teachings of the references (MPEP 2143.01(IV)). Requester's argument that "one skilled in the art, wishing to make isobutanol," would have been motivated to combine the references is not persuasive absent any evidence that one skilled in the art would have wanted to produce isobutanol by fermentation. With no suggestion in the prior art to engineer microorganisms to produce isobutanol, a reasonable examiner would not find it important to the patentability of the claims that the methods and materials used to do so were known in the art, and therefore the cited prior art does not raise a SNQ.

CONCLUSION

1. The PETITION is DENIED.

2. This decision is final and nonappealable. 35 U.S.C. § 303(c); 37 CFR 1.927. No further communication on this matter will be acknowledged or considered.

3. Telephone inquiries related to this decision should be directed to Deborah Jones, Supervisory Patent Examiner, at (571) 272-1535, or in her absence to the undersigned at (571) 272-0700.

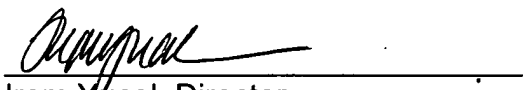

Irem Yucel, Director
Central Reexamination Unit

UNITED STATES PATENT AND TRADEMARK OFFICE

UNITED STATES DEPARTMENT OF COMMERCE
United States Patent and Trademark Office
Address: COMMISSIONER FOR PATENTS
P.O. Box 1450
Alexandria, Virginia 22313-1450
www.uspto.gov

APPLICATION NO.	FILING DATE	FIRST NAMED INVENTOR	ATTORNEY DOCKET NO.	CONFIRMATION NO.
95/001,721	08/22/2011	7,923,390	SYC0008XA	1718

207 7590 11/29/2011

WEINGARTEN, SCHURGIN, GAGNEBIN & LEBOVICI LLP
TEN POST OFFICE SQUARE
BOSTON, MA 02109

EXAMINER	
ART UNIT	PAPER NUMBER

DATE MAILED: 11/29/2011

Please find below and/or attached an Office communication concerning this application or proceeding.

UNITED STATES PATENT AND TRADEMARK OFFICE

UNITED STATES DEPARTMENT OF COMMERCE
United States Patent and Trademark Office
Address: COMMISSIONER FOR PATENTS
P.O. Box 1450
Alexandria, Virginia 22313-1450
www.uspto.gov

APPLICATION NO.	FILING DATE	FIRST NAMED INVENTOR	ATTORNEY DOCKET NO.	CONFIRMATION NO.
90/011,670	05/05/2011	7923390	MCTGS-004Xq700	5181

207 7590 11/29/2011

WEINGARTEN, SCHURGIN, GAGNEBIN & LEBOVICI LLP
TEN POST OFFICE SQUARE
BOSTON, MA 02109

EXAMINER	
ART UNIT	PAPER NUMBER

DATE MAILED: 11/29/2011

Please find below and/or attached an Office communication concerning this application or proceeding.

UNITED STATES PATENT AND TRADEMARK OFFICE

Commissioner for Patents
United States Patents and Trademark Office
P.O.Box 1450
Alexandria, VA 22313-1450
www.uspto.gov

DO NOT USE IN PALM PRINTER

THIRD PARTY REQUESTER'S CORRESPONDENCE ADDRESS
DINSMORE & SHOHL LLP
FIFTH THIRD CENTER
ONE SOUTH MAIN STREET SUITE 1300
DAYTON, OH 45402-2023

Date:
MAILED

NOV 29 2011

CENTRAL REEXAMINATION UNIT

Transmittal of Communication to Third Party Requester
Inter Partes Reexamination

REEXAMINATION CONTROL NO. : 95001721
PATENT NO. : 7923390
TECHNOLOGY CENTER : 3999
ART UNIT : 3991

Enclosed is a copy of the latest communication from the United States Patent and Trademark Office in the above identified Reexamination proceeding. 37 CFR 1.903.

Prior to the filing of a Notice of Appeal, each time the patent owner responds to this communication, the third party requester of the inter partes reexamination may once file written comments within a period of 30 days from the date of service of the patent owner's response. This 30-day time period is statutory (35 U.S.C. 314(b)(2)), and, as such, it cannot be extended. See also 37 CFR 1.947.

If an ex parte reexamination has been merged with the inter partes reexamination, no responsive submission by any ex parte third party requester is permitted.

All correspondence relating to this inter partes reexamination proceeding should be directed to the Central Reexamination Unit at the mail, FAX, or hand-carry addresses given at the end of the communication enclosed with this transmittal.

UNITED STATES PATENT AND TRADEMARK OFFICE

Commissioner for Patents
United States Patent and Trademark Office
P.O. Box 1450
Alexandria, VA 22313-1450
www.uspto.gov

Weingarten, Schurgin, Gagnebin & Lebovici LLP
Ten Post Office Square
Boston, MA 02109

(For Patent Owner)

MAILED

NOV 29 2011

CENTRAL REEXAMINATION UNIT

David R. Yohannan
Kelley, Drye & Warren LLP
3050 K Street NW, Suite 400
Washington, DC 20007

(For the '95/001,721 Requester)

In re Burke et al.
Ex Parte Reexamination Proceeding
Control No.: 90/011,670
Filed: May 5, 2011
For: U.S. Patent No. 7,923,390 B2

In re Burke et al.
Inter Partes Reexamination Proceeding
Control No.: 95/001,721
Filed: August 22, 2011
For: U.S. Patent No.: 7,923,390 B2

DECISION
SUA SPONTE
TO MERGE
REEXAMINATION
PROCEEDINGS

The above-captioned reexamination proceedings are before the Office of Patent Legal Administration for *sua sponte* consideration on merging the above proceedings.

Ex parte reexamination proceeding No. 90/011,670 and *inter partes* reexamination proceeding No. 95/001,721 **are merged** into a single proceeding.

BACKGROUND

1. On April 12, 2011, United States Patent Number 7,923,390 B2 ("the '390 patent") issued to Burke et al. with 28 claims.

2. On May 5, 2011, patent owner filed a request for *ex parte* reexamination of claims 1-28 of the '390 patent and was assigned control number 90/011,670 ("the '670 proceeding").

3. On June 16, 2011, *ex parte* reexamination of claims 1-28 of the '390 patent was granted in the '670 reexamination proceeding. No patent owner statement has been filed in the '670 reexamination proceeding, and the time for filing such a statement has expired.

4. On August 22, 2011, a request for *inter partes* reexamination of claims 1 and 14 of the '390 patent was filed by a third party requester and assigned Reexamination Control No. 95/001,721 ("the '721 proceeding"). The request identified Syscom Advanced Materials as the real party in interest.

5. On November 18, 2011, *inter partes* reexamination of claims 1 and 14 of the '390 patent was granted in the '721 proceeding.

6. To date, no Office action has issued in either of the two proceedings.

DECISION

I. MERGER OF PROCEEDINGS

Reexamination has been ordered in the above-captioned two proceedings for overlapping claims of the same patent. One of the proceedings (the '670 proceeding) is an *ex parte* proceeding. The other proceeding (the '721 proceeding) is an *inter partes* proceeding. Both proceedings are still pending, and have not been terminated. In addition, the period for filing the patent owner's statement in the *ex parte* proceeding has expired. Therefore, consideration of merger is ripe at this point in time.

MPEP 2686.01 points out:

> Where a second request for reexamination is filed and reexamination is ordered, and a first reexamination proceeding is pending, the proceedings will be merged where the Office (in its discretion) deems it appropriate to do so, to facilitate the orderly handling of the proceedings. However, a decision not to merge is within the sole discretion of the Office to facilitate/carry out the statutory mandate of 35 U.S.C. 314(c) to conduct reexamination proceedings with "special dispatch."

In this instance, based upon the record as a whole, it is found, based on the facts as they exist at present, that merger of the proceedings should facilitate the orderly handling of the proceedings with special dispatch. Accordingly, the 90/011,670 and 95/001,721 proceedings **are hereby merged**. The merged proceeding will be conducted in accordance with the guidelines and requirements that follow.

II. THE SAME CLAIMS MUST BE MAINTAINED IN BOTH PROCEEDINGS

The claims are identical in both proceedings. The patent owner is required to continue to maintain the same claims (and specification) in both files throughout the merged proceeding.

III. CONDUCT OF MERGED PROCEEDING

A. Governing regulations for the merged proceeding:

The present decision merges an *ex parte* reexamination proceeding with an *inter partes* reexamination proceeding. Pursuant to 37 CFR 1.989(b), the merged proceeding is governed by 37 CFR 1.902 through 1.997.

B. *Inter partes* Third Party Requester Participation:

1. Comment rights:

The *inter partes* requester can comment pursuant to 35 U.S.C. 314(b)(2).[1] First, an *inter partes* requester's right to comment is contingent upon the patent owner responding to, or commenting on, an Office action. Second, the *inter partes* requester's right to comment is limited to issues raised in either the Office action or the patent owner's response to the action.

2. Appeal Rights:

The *inter partes* reexamination procedures for taking appeal, and for participating in the patent owner's appeal, are explained in MPEP 2674 through 2675 and 2678 through 2683. As pointed out in MPEP 2674:

> A notice of appeal by a third party requester must identify each rejection *that was previously proposed by that* third *party requester* which the third party requester intends to contest. It is not sufficient to merely appeal from the allowance of a claim (i.e., the examiner's finding of a claim patentable); the third party requester must identify each previously proposed rejection to be contested.

Thus, the *inter partes* reexamination requester's appeal must **only** be taken from the finding(s) of patentability of claims in the RAN as to the rejections the third party requester proposed in the *inter partes* reexamination request and any that the *inter partes* third party requester properly added during the examination stage of the merged proceeding. Also, as provided by 37 CFR 41.67(c)(1)(vi):

> No new ground of rejection can be proposed by a third party requester appellant, unless such ground was withdrawn by the examiner during the prosecution of the proceeding, and the third party requester has not yet had an opportunity to propose it as a third party requester proposed ground of rejection.

---

[1] Each time that the patent owner files a response to an action on the merits from the United States Patent and Trademark Office ("Office"), the *inter partes* third-party requester shall have one opportunity to file written comments addressing issues raised by the action of the Office or the patent owner's response thereto, if those written comments are received by the Office within 30 days after the date of service of the patent owner's response.

Thus, an appellant's brief shall present a concise statement of each issue. And, no new ground of rejection (i.e., a ground that the requester did not propose in the *inter partes* reexamination request, or during the merged proceeding) can be proposed by the *inter partes* third party requester appellant, unless that ground was withdrawn by the examiner during the prosecution of the proceeding, and the *inter partes* third party requester did not yet have an opportunity to propose it as a third party requester proposed ground of rejection.

It is to be noted that, because the '721 *inter partes* third party requester did not propose any rejections of claims 2-13, and 15-28 in its request for reexamination, the '721 requester has no appeal rights as to those claims as they appear in the '390 patent.

C. Papers mailed/filed:

All papers mailed by the Office throughout the merged proceeding will take the form of a single action which applies to both proceedings. All papers issued by the Office, or filed by the patent owner and the third party requester, will contain the identifying data for both files and will be physically entered in each reexamination file. All papers filed by the patent owner and the third party requester must consist of a single paper, **filed in duplicate**, each bearing a signature and identifying data for both files, for entry into each file.

All papers filed by the patent owner and the third party requester should be directed:

by Mail to: Attn: Mail Stop "*Inter Partes* Reexam"
Central Reexamination Unit
Commissioner for Patents
P.O. Box 1450
Alexandria, VA 22313-1450

by FAX to: (571) 273-9900
Central Reexamination Unit

by Hand to: Customer Service Window
Attn: Central Reexamination Unit
Randolph Building, Lobby Level
401 Dulany Street
Alexandria, VA 22314

by EFS: Registered users may submit papers via the electronic filing system EFS-Web, at:

https://efs.uspto.gov/efile/myportal/efs-registered

The patent owner and the requester are reminded that every paper filed (including papers filed *via* facsimile transmission) in the merged proceeding subsequent to this decision must be served on the other party, and every paper filed must reflect that such paper was served on the other

party, pursuant to 37 CFR 1.903. All papers are to be addressed to the Central Reexamination Unit as provided above.

D. Amendments:

The filing of any amendments to the drawings, specification or claims must comply with 37 CFR 1.943, which incorporates the provisions of 37 CFR 1.530, and the guidelines of MPEP § 2666.01, which in turn references the guidelines of MPEP § 2250.

37 CFR 1.121 does not apply to amendments in reexamination. Accordingly, clean copies of the amended claims are not required and are not to be submitted; rather amendments are to be presented via markings pursuant to paragraph 37 CFR 1.530(f), except that a claim should be canceled by a statement canceling the claim, without presentation of the text of the claim.

Pursuant to 37 CFR 1.530(i), all amendments must be made relative to the patent specification, including the claims, and drawings, which are in effect as of the date of filing the request for reexamination. *Amendments are not to be made relative to previous amendments.* Thus, for all amendments, all words not appearing in the patent are always underlined, and only words being deleted from the patent appear in brackets.

E. Fees:

Where a paper is filed that requires payment of a fee (*e.g.*, petition fee, excess claims fee, extension of time fee, appeal fee, brief fee, oral hearing fee), only a single fee need be paid. For example, only one fee need be paid for any patent owner's appellant brief (or that of the *inter partes* reexamination requester) which may be filed, even though the brief relates to merged multiple proceedings, and copies must be filed (as pointed out above) for each file in the merged proceeding.

F. Citation of Patents and Printed Publications:

Upon return of the present merged proceeding to the examiner, the examiner will review the files to ensure that each file contains identical citations of prior patents and printed publications, and will cite such documents as are necessary as part of the next action in order to place the files in that condition.

G. Appeal Procedure Reminders for *Inter Partes* Reexamination

The parties are reminded of the procedures for taking appeal in an *inter partes* reexamination as explained in MPEP 2674 and 2675. The appeal must only be taken from (1) the rejection(s) of the claims in the Right of Appeal Notice (RAN) that the *patent owner* proposes to contest, or (2) the finding(s) of patentability of claims in the RAN that the *inter partes requester* proposes to contest. Therefore, in the notice of appeal, the patent owner must identify each claim rejected by examiner that the patent owner intends to contest. The *inter partes* requester must identify each rejection *that was previously proposed by the inter partes requester* that the *inter partes* third

party requester intends to contest, and each rejection made and later withdrawn by the examiner that the *inter partes* requester intends to contest. No new ground of rejection can be proposed by the *inter partes* requester appellant, unless such ground was withdrawn by the examiner during the prosecution of the proceeding, and the *inter partes* requester has not yet had an opportunity to propose it as a third party requester proposed ground of rejection. See 37 CFR 41.67(c)(1)(vi) as to the proposed rejections that the *inter partes* requester can challenge in the appellant brief.

CONCLUSION

1. *Ex parte* Reexamination Control No. 90/011,670 and *inter partes* Reexamination Control No. 95/001,721 are **merged into a single proceeding**, to be conducted in accordance with the procedure set forth above in Part III of this decision.

2. Any questions concerning this communication should be directed to Susy Tsang-Foster, Legal Advisor, at 571-272-7711.

Pinchus M. Laufer
Senior Legal Advisor
Office of Patent Legal Administration

November 22, 2011

UNITED STATES PATENT AND TRADEMARK OFFICE

Commissioner for Patents
United States Patent and Trademark Office
P.O. Box 1450
Alexandria, VA 22313-1450
www.uspto.gov

KNOBBE MARTENS OLSON
& BEAR LLP
2040 MAIN STREET
FOURTEENTH FLOOR
IRVINE CA 92614

(FOR PATENT OWNER)

MAILED

NOV 15 2011

CENTRAL REEXAMINATION UNIT

ALLEMAN HALL MCCOY RUSSELL
& TUTTLE, LLP
806 S.W. BROADWAY, SUITE 600
PORTLAND, OR 97205

(FOR THIRD PARTY
REQUESTER)

In re Kruse
Reexamination Proceeding
Control No. : 95/001,730
Deposited: October 21, 2011
Patent No. 6,405,704

: **DECISION**
: **ON**
: **THIRD PARTY REQUESTER'S**
: **PETITION**
: **UNDER 37 CFR 1.181**

This is a decision addressing third party requester's petition, filed October 21, 2011, under 37 CFR 1.181 requesting that the proceeding be given the filing date of August 29, 2011. Because the petition is requesting supervisory review under 37 CFR 1.181(a)(3), the petition is treated as a request for director review of the September 21, 2011 "Notice of Failure to Comply with *Inter Partes* Reexamination Request Filing Requirements (37 CFR 1.915(c))" that determined that the papers deposited on August 29, 2011 did not meet the filing date requirements.

The petition is before the Director of Technology Center 1600, who also oversees the Central Reexamination Unit, for decision.

The requester's October 21, 2011 petition is DENIED for the reasons set forth below.

STATEMENT OF FACTS RELEVANT TO THE DECISION

1. Patent No. 6,405,704 (the '704 patent) issued on June 18, 2002.

2. A request for reexamination, assigned Control No. 95/001,730 (the '730 proceeding), was deposited by a third party requester on August 29, 2011.

3. On September 21, 2011, a "Notice of Failure to Comply with *Inter Partes* Reexamination Request Filing Requirements (37 CFR 1.915(c))" [hereinafter "Notice"] was mailed by the Office. The notice stated that the request failed to comply with filing date requirements due to failure to provide a statement pointing out each substantial new question of patentability based on the cited patents and printed publications, and a detailed explanation of the pertinency and manner of applying the patents & printed publications to every claim for which reexamination is requested.

4. On October 21, 2011, the third party requester deposited a replacement request for *inter partes* reexamination of the '704 patent.

5. Also, on October 21, 2011, a third party requester filed the petition under 37 CFR 1.181(a)(3) to accord the proceeding a filing date of August 29, 2011.

DECISION UNDER 37 CFR 1.181

The third party requester (petitioner) states that they are seeking relief under 37 CFR 1.181(a)(3) to accord the proceeding a filing date of August 29, 2011, the date of deposit for the original request for reexamination. Petitioner asserts that the original deposit date of August 29, 2011 should be the filing date of this proceeding because the error made in the originally deposited request was minor and the passage of the American Invents Acts on September 16, 2011 changes the standard for granting an *inter partes* reexamination. See, e.g., pages 1-2 of the petition.

In response to petitioner's general arguments for according a filing date of August 29, 2011 to this reexamination proceeding, the director finds there are not good and sufficient reasons to do so. First, 35 U.S.C. 314(c) requires that all *inter partes* reexamination proceedings to be acted upon with "special dispatch." The filing date regulations (e.g., 37 CFR 1.915) and procedures of the Office were established through notice and comment in order to achieve special dispatch in a reasonable manner. Second, under 35 U.S.C. 311, in a request for *inter partes* reexamination of a patent, the requester must "set forth the pertinency and manner of applying cited prior art to every claim for which reexamination is requested." Third, under 35 U.S.C. 315, the patent owner in an *inter partes* reexamination proceeding has an appeal right "with respect to any decision adverse to the patentability of" the patent claims, and the reexamination requester has an appeal right "with respect to any final decision favorable to the patentability of" the patent claims. Accordingly, the requester must explain the pertinency and manner of applying cited prior art to every requested claim for each proffered proposed rejection.

The petition does not state that the Office failed to follow its policies and procedures, and does not allege that the September 21, 2011 Notice incorrectly identified an error in the request deposited on August 29, 2011. Instead, the petitioner argues that the error was only a minor typographical error. Whether or not the error is classified as a "minor typographical error" or an "inadvertent error," the effect of the error was that requester would have appeal rights for claims 1-4 based on a proposed rejection identified as "SNQ 14" (assuming reexamination is granted on this basis) even though requester only provided the statutorily mandated explanation for claim 1 on pages 95-97 of the August 29, 2011 request. In other words, the record is clear that the August 29, 2011 request failed to meet the requirements of 35 U.S.C. 311 and its implementing regulation 37 CFR 1.915. Such statutorily-based requirements cannot be waived or set aside merely because Congress acted on September 16, 2011 to change the standard for granting *inter partes* reexamination. In summary, upon director review, the record shows that Office personnel appropriately followed Office rules and procedures in the determination to issue the Notice, and did not categorically deprive the petitioner of its statutory rights to file a request for reexamination.

As a result of the above-mentioned defect, the August 29, 2011 request fails to provide a detailed explanation of the pertinency and manner of applying the patents and printed publications to every claim for which reexamination is requested," as is required by 37 CFR 1.915(b)(3). Specifically, for each identified proposed rejection, the request must explain how the cited documents identified for that proposed rejection are applied to meet/teach the claim limitations for each listed claim, to thus establish the identified proposed rejection. If the requester were permitted to omit an explanation of how such documents cited in the request are applied to the patent claims, an undue burden would be placed on the Office to address each document in the determination on the request, without an explanation of the relevance to the patent claims. Accordingly, such an omission is prohibited by law.

In summary, the Office personnel appropriately followed the reexamination laws and procedures in deciding to issue the Notice, in the interest of "special dispatch," and in accordance with 35 USC 311 and its implementing regulations and procedures. Accordingly, good and sufficient reasons to accord the August 29, 2011 deposit date as the filing date for this reexamination proceeding have not been provided. Therefore, the third party requester's petition is denied.

CONCLUSION

1. Third party requester's petition under 37 CFR 1.181, filed October 21, 2011, is DENIED for the reasons discussed above.

2. Telephone inquiries related to this decision should be directed to Andy Kashnikow, Supervisory Patent Examiner, at (571) 272-4361.

Irem Yucel, Director
Technology Center 1600

UNITED STATES PATENT AND TRADEMARK OFFICE

UNITED STATES DEPARTMENT OF COMMERCE
United States Patent and Trademark Office
Address: COMMISSIONER FOR PATENTS
P.O. Box 1450
Alexandria, Virginia 22313-1450
www.uspto.gov

APPLICATION NO.	FILING DATE	FIRST NAMED INVENTOR	ATTORNEY DOCKET NO.	CONFIRMATION NO.
95/001,737	09/06/2011	James C. Chen	RI3381699	2315

40401 7590 01/05/2012

Hershkovitz & Associates, LLC
2845 Duke Street
Alexandria, VA 22314

EXAMINER	
ART UNIT	PAPER NUMBER

DATE MAILED: 01/05/2012

Please find below and/or attached an Office communication concerning this application or proceeding.

UNITED STATES PATENT AND TRADEMARK OFFICE

Commissioner for Patents
United States Patents and Trademark Office
P.O.Box 1450
Alexandria, VA 22313-1450
www.uspto.gov

DO NOT USE IN PALM PRINTER

THIRD PARTY REQUESTER'S CORRESPONDENCE ADDRESS

CLIFFORD A. ULRICH
KENYON & KENYON LLP
ONE BROADWAY
NEW YORK, NY 10004

Date:

MAILED
JAN 05 2012
CENTRAL REEXAMINATION UNIT

Transmittal of Communication to Third Party Requester
Inter Partes Reexamination

REEXAMINATION CONTROL NO. : 95001737
PATENT NO. : 6520669
TECHNOLOGY CENTER : 3999
ART UNIT : 3992

Enclosed is a copy of the latest communication from the United States Patent and Trademark Office in the above identified Reexamination proceeding. 37 CFR 1.903.

Prior to the filing of a Notice of Appeal, each time the patent owner responds to this communication, the third party requester of the inter partes reexamination may once file written comments within a period of 30 days from the date of service of the patent owner's response. This 30-day time period is statutory (35 U.S.C. 314(b)(2)), and, as such, it cannot be extended. See also 37 CFR 1.947.

If an ex parte reexamination has been merged with the inter partes reexamination, no responsive submission by any ex parte third party requester is permitted.

All correspondence relating to this inter partes reexamination proceeding should be directed to the Central Reexamination Unit at the mail, FAX, or hand-carry addresses given at the end of the communication enclosed with this transmittal.

UNITED STATES PATENT AND TRADEMARK OFFICE

Commissioner for Patents
United States Patent and Trademark Office
P.O. Box 1450
Alexandria, VA 22313-1450
www.uspto.gov

HERSHKOVITZ & ASSOCIATES, LLC : (For Patent Owner)
2845 Duke Street :
Alexandria, Va. 22314 :

MAILED

JAN 05 2012

CENTRAL REEXAMINATION UNIT

Clifford A. Ulrich :
KENYON & KENYON LLP : (For Third Party
One Broadway : Requester)
New York, NY 10004 :

In re: Chen et al. :
Inter Partes Reexamination Proceeding : DECISION ON PETITION
Control No.: 95/001,737 :
For: U.S. Patent No.: 6,520,669 :

This is a decision on petition filed by the patent owner: a petition filed on December 5th, 2011, entitled "PETITION TO VACATE *OFFICE ACTION*" ["petition"].

The Petition is treated as a petition under 37 CFR § 1.181.

The petition is before the Director of the Central Reexamination Unit. The petition is **denied**.

REVIEW OF RELEVANT FACTS

- U.S. Patent No. 6,520,669 issued on February 18th, 2003.
- A request for *inter partes* reexamination was filed on September 6th, 2011 and assigned control no. 95/001,737.
- *Inter partes* reexamination was ordered on October 14th, 2011.
- An Office Action was mailed on October 14th, 2011.
- A petition for an Extension of Time was filed on December 2nd, 2011.
- The Petition was filed on December 5th, 2011.

- The Petition for the Extension of Time was granted-in-part for one (1) month on December 9th, 2011.

STATUTES, REGULATIONS, AND PATENT EXAMINING PROCEDURES

37 C.F.R. § 1.181 Petition to the Director

(a) Petition may be taken to the Director:

(1) From any action or requirement of any examiner in the ex parte prosecution of an application, or in ex parte or inter partes prosecution of a reexamination proceeding which is not subject to appeal to the Board of Patent Appeals and Interferences or to the court.

DECISION

Patent owner ["petitioner"] argues in the petition that the Office vacate the Office Action dated October 14, 2011, since it does not conform with the "special dispatch" requirement of the *inter partes* Reexamination proceedings, including filtering the unreasonably voluminous number of rejections.

Petition

As a procedural matter, the petition was filed under 37 CFR § 1.181, which is reserved for action or requirement of any examiner in the ex parte prosecution of an application, or in ex parte or inter partes prosecution of a reexamination proceeding which is not subject to appeal to the Board of Patent Appeals and Interferences or to the court.

In regards to the Petition the MPEP in § 2660(III): FORM AND CONTENT OF FIRST OFFICE ACTION ON THE MERITS THAT IS NOT AN ACP clearly states:

> The examiner's first action should be comprehensive and address **all** issues as to the prior art patents and/or printed publications. The action will clearly set forth **each** ground of rejection and/or ground of objection, and the reasons supporting the ground. The action will also clearly set forth each determination favorable to the patentability of claims, i.e., each rejection proposed by the third party requester that the examiner refuses to adopt. Reasons why the rejection proposed by the third party requester is not appropriate (i.e.,

why the claim cannot be rejected under the ground proposed by the third party requester) must be clearly stated for each rejection proposed by the third party requester that the examiner refuses to adopt. Comprehensive reasons for patentability must be given for each determination favorable to patentability of claims. See MPEP § 1302.14 for examples of suitable statements of reasons. It is to be noted that the examiner is **not to refuse** to adopt a rejection properly proposed by the requester as being cumulative to other rejections applied. Rather, any such proposed rejection must be adopted **to preserve parties' appeal rights as to such proposed rejections**.....

Where the request for reexamination includes material such as a claim chart to explain a proposed rejection in order to establish the existence of a substantial new question of patentability, the examiner may cut and paste the claim chart (or other material) to incorporate it within the body of the Office action.

Therefore, the MPEP does not provide for the examiner to filter the unreasonably voluminous number of rejections proposed by the Third Party Requestor in order to preserve the Requestor's appeal rights. The petition is therefore **denied**.

CONCLUSION

1. The petition filed December 5th, 2011 is denied.

2. The most-recent Office action dated October 14th, 2011, as listed in the statement of facts herein, remains outstanding and patent owner's response is due as set forth in decision on the Extension of Time dated December 9th, 2011.

3. Telephone inquiries related to this decision should be directed to Sudhanshu C. Pathak, Supervisory Patent Examiner, at (571) 272-5509 or in his absence to the undersigned at (571) 272-0700.

Irem Yucel
Director, Central Reexamination Unit

UNITED STATES PATENT AND TRADEMARK OFFICE

UNITED STATES DEPARTMENT OF COMMERCE
United States Patent and Trademark Office
Address: COMMISSIONER FOR PATENTS
P.O. Box 1450
Alexandria, Virginia 22313-1450
www.uspto.gov

APPLICATION NO.	FILING DATE	FIRST NAMED INVENTOR	ATTORNEY DOCKET NO.	CONFIRMATION NO.
95/001,746	09/07/2011	6839759	43614.98	5175

22852 7590 12/19/2011

FINNEGAN, HENDERSON, FARABOW, GARRETT & DUNNER LLP
901 NEW YORK AVENUE, NW
WASHINGTON, DC 20001-4413

EXAMINER	
NALVEN, ANDREW L	
ART UNIT	PAPER NUMBER
3992	
MAIL DATE	DELIVERY MODE
12/19/2011	PAPER

Please find below and/or attached an Office communication concerning this application or proceeding.

The time period for reply, if any, is set in the attached communication.

UNITED STATES PATENT AND TRADEMARK OFFICE

Commissioner for Patents
United States Patents and Trademark Office
P.O.Box 1450
Alexandria, VA 22313-1450
www.uspto.gov

DO NOT USE IN PALM PRINTER

THIRD PARTY REQUESTER'S CORRESPONDENCE ADDRESS

Date: 12-19-11

David L. McCombs
HAYNES AND BOONE, LLP, IP SECTION
2323 Victory Ave., Suite 700
Dallas, TX 75219

Transmittal of Communication to Third Party Requester
Inter Partes Reexamination

REEXAMINATION CONTROL NO. : 95001746
PATENT NO. : 6839759
TECHNOLOGY CENTER : 3999
ART UNIT : 3992

Enclosed is a copy of the latest communication from the United States Patent and Trademark Office in the above identified Reexamination proceeding. 37 CFR 1.903.

Prior to the filing of a Notice of Appeal, each time the patent owner responds to this communication, the third party requester of the inter partes reexamination may once file written comments within a period of 30 days from the date of service of the patent owner's response. This 30-day time period is statutory (35 U.S.C. 314(b)(2)), and, as such, it cannot be extended. See also 37 CFR 1.947.

If an ex parte reexamination has been merged with the inter partes reexamination, no responsive submission by any ex parte third party requester is permitted.

All correspondence relating to this inter partes reexamination proceeding should be directed to the Central Reexamination Unit at the mail, FAX, or hand-carry addresses given at the end of the communication enclosed with this transmittal.

UNITED STATES PATENT AND TRADEMARK OFFICE

MAILED

Commissioner for Patents
United States Patent and Trademark Office
P.O. Box 1450
Alexandria, VA 22313-1450
www.uspto.gov

DEC 19 2011

CENTRAL REEXAMINATION UNIT

Joseph E. Palys
FINNEGAN, HENDERSON, FARABOW, GARRETT & DUNNER LLP
901 New York Avenue, N.W.
Washington, D.C.. 20001-4413

(For Patent Owner)

David L. McCombs
HAYNES AND BOONE LLP
2323 Victory Ave., Suite 700
Dallas, Texas 75219

(For Third Party Requester)

In re: Larson et al.
Inter Partes Reexamination Proceeding
Control No.: 95/001,746
For: U.S. Patent No. 6,839,759

DECISION ON PETITION TO VACATE FILING DATE OF *INTER PARTES* REEXAMINATION PROCEEDING AND PETITION IN OPPOSITION THEREOF

This is a decision on the 17 November 2011 petition filed by the patent owner under 37 CFR 1.181 entitled, "Expedited Petition to Vacate *Inter Partes* Reexamination" [hereinafter "the petition to vacate"]. The petition to vacate requests that the Office vacate the filing date of the reexamination proceeding because the order granting reexamination and the corresponding Office action were not based on prior art patents or printed publications. The third party requester filed a petition under 37 CFR § 1.182 on 1 December 2011 to oppose the petition to vacate [hereinafter "the petition in opposition"].

The petition in opposition is being treated as a petition under 37 CFR 1.181. As such, these petitions are before the Director of the Central Reexamination Unit.

The petition to vacate is dismissed for the reasons set forth below.

The petition in opposition is dismissed for the reasons set forth below.

REVIEW OF RELEVANT FACTS

- U.S. Patent No. 6,839,759 [hereinafter "the '759 patent] was granted to Larson et al. on 4 January 2005.

- On 7 September 2011, a request for *inter partes* reexamination was filed by a third party requester. The resulting reexamination proceeding was assigned control number 95/001,746 [hereinafter "the '1746 proceeding"].

- On 14 October 2011, the Office issued an order granting *inter partes* reexamination in the '1746 proceeding, with an accompanying Office action on the merits.

- On 17 November 2011, patent owner filed the petition to vacate.

- On 1 December 2011, the third party requester filed the petition in opposition.

STATUTES, REGULATIONS, AND PATENT EXAMINING PROCEDURES

37 CFR 1.181 Petition to the Director

(a) Petition may be taken to the Director:
(1) From any action or requirement of any examiner in the ex parte prosecution of an application, or in ex parte or inter partes prosecution of a reexamination proceeding which is not subject to appeal to the Board of Patent Appeals and Interferences or to the court.

MPEP § 2646 (II) Petition to Vacate the Order Granting Reexamination

Where the examiner determines that a date of a reference is early enough such that the reference constitutes prior art, that determination is not petitionable (with respect to vacating the examiner's finding of a substantial new question). Where the examiner determines that a reference is a printed publication (i.e., that the criteria for publication has been satisfied), that determination is also not petitionable. These matters cannot be questioned with respect to vacating the order granting reexamination until a final agency decision on the reexamination proceeding has issued. Rather, these matters can be argued by the patent owner and appealed during the examination phase of the reexamination proceeding. . . When a petition under 37 CFR 1.181 is filed to vacate a reexamination order, the third party requester may file a single submission in opposition to the petition.

DECISION ON PETITION TO VACATE THE FILING DATE

Patent owner contends that the order granting reexamination and the corresponding Office action are *ultra vires* as not based on prior art patents or printed publications. As such, patent owner requests that the Office vacate the '1746 proceeding. However, patent owner presents only one basis for this contention – that none of the *Kent, Martin, Kent II,* RFC 793, RFC 791, and *Maughan* references have been shown to be printed publications. Petition to Vacate, pp. 3-5.

The MPEP clearly states that "[w]here the examiner determines that a reference is a printed publication (i.e., that the criteria for publication has been satisfied), that determination is . . . not petitionable." MPEP § 2646(II). The MPEP goes on to point out that such a matter "can be argued by the patent owner and appealed during the examination phase of the reexamination proceeding." *Id.* Further the MPEP cautions that "[t]he line of demarcation between appealable matters for the Board of Patent Appeals and Interferences (Board) and petitionable matters for the Director of the U.S. Patent and Trademark Office (Director) should be carefully observed," MPEP § 1201, and that "the Director will not ordinarily entertain a petition where the question presented is a matter appealable to the Board," *id.*

In view of the foregoing, patent owner's basis for contending that the order granting reexamination and the corresponding Office action are *ultra vires,* namely that the Office has not shown that the aforementioned references are printed publications, is an appealable issue and is not appropriate to address via a petition. In other words, all the issues raised by patent owner are subject to appeal to the Board of Patent Appeals and Interferences. Therefore, this paper cannot be deemed a proper petition under 37 CFR 1.181(a)(1).

This petition is **dismissed** as being an improper paper.

DECISION ON PETITION IN OPPOSITION

"When a petition under 37 CFR § 1.181 is filed to vacate a reexamination order, the third party requester may file a single submission in opposition to the petition." MPEP § 2646(II). Here, third party requester filed the petition in opposition as a single submission in opposition to the patent owner's petition to vacate. However, as set forth above, the petition to vacate is an improper paper. Since the petition to vacate is improper, there is no petition filed under 37 CFR 1.181 upon which the third party requester may base the filing of the single submission in opposition.

This petition is **dismissed** as being an improper paper.

In view of the above, the present petitions in the reexamination proceeding do not have an entry right under the rules. Therefore, the present petitions will be expunged from record in the '1746 reexamination proceeding, and are being returned to the petitioners ***without consideration of the substance of the petitions***. As the petitions has been entered into the electronic Image File Wrapper (IFW) record, the petitions will be "returned" by closing the paper in the IFW, and marking the paper nonpublic to expunge it from the record. The present decision will, however, be made of record in the reexamination proceeding. See also MPEP § 2667.

CONCLUSION

1. The patent owner's petition under 37 CFR § 1.181 to vacate the reexamination proceeding is hereby **dismissed.**

2. The third party requester's petition in opposition is hereby **dismissed.**

3. The patent owner's petition under 37 CFR § 1.181 and third party requester's petition in opposition **will be expunged** from the record by closing the papers in the IFW record, and marking the papers nonpublic. This decision, however, will be of record in the proceeding.

4. The Office action, dated 14 October 2011, remains outstanding and the patent owner's response is due as set forth in that action.

5. Any response should be addressed as follows:

By Mail to: Mail Stop *Ex Parte* Reexam
Central Reexamination Unit
Commissioner for Patents
United States Patent & Trademark Office
P. O. Box 1450
Alexandria, VA 22313-1450

By Fax to: (571) 273-9900
Central Reexamination Unit

By Hand: Customer Service Window
Randolph Building
401 Dulany Street
Alexandria, VA 22314

By EFS: Registered users of EFS-Web may alternatively submit such correspondence via EFS-Web, at **https://efs.uspto.gov/efile/myportal/efs-registered**. EFS-Web offers the benefit of quick submission to the particular area of the Office that needs to act on the correspondence. Also, EFS-Web submissions are "soft scanned" (i.e., electronically uploaded) directly into the official file for the reexamination proceeding, which offers parties the opportunity to review the content of their submissions after the "soft scanning" process is complete.

6. Telephone inquiries with regard to this decision should be directed to Daniel Ryman, SPE AU 3992, at (571) 272-3152, in the event that Daniel Ryman is unavailable, to the undersigned at (571) 272-0700.

Irem Yucel
Director, Central Reexamination Unit

UNITED STATES PATENT AND TRADEMARK OFFICE

UNITED STATES DEPARTMENT OF COMMERCE
United States Patent and Trademark Office
Address: COMMISSIONER FOR PATENTS
P.O. Box 1450
Alexandria, Virginia 22313-1450
www.uspto.gov

APPLICATION NO.	FILING DATE	FIRST NAMED INVENTOR	ATTORNEY DOCKET NO.	CONFIRMATION NO.
95/001,747	09/07/2011	Guoshun Deng	237325-000013	5412

84310 7590 11/29/2011

Troutman Sanders LLP
The Chrysler Building
405 Lexington Avenue
New York, NY 10174

EXAMINER	
ART UNIT	PAPER NUMBER

DATE MAILED: 11/29/2011

Please find below and/or attached an Office communication concerning this application or proceeding.

UNITED STATES PATENT AND TRADEMARK OFFICE

Commissioner for Patents
United States Patents and Trademark Office
P.O.Box 1450
Alexandria, VA 22313-1450
www.uspto.gov

DO NOT USE IN PALM PRINTER

THIRD PARTY REQUESTER'S CORRESPONDENCE ADDRESS
BAKER BOTTS LLP
PATENT DEPARTMENT
98 SAN JACINTO BLVD., SUITE 1500
AUSTIN, TX 78701-4039

Date: MAILED

NOV 29 2011

CENTRAL REEXAMINATION UNIT

Transmittal of Communication to Third Party Requester
Inter Partes Reexamination

REEXAMINATION CONTROL NO. : 95001747
PATENT NO. : 7788447
TECHNOLOGY CENTER : 3999
ART UNIT : 3992

Enclosed is a copy of the latest communication from the United States Patent and Trademark Office in the above identified Reexamination proceeding. 37 CFR 1.903.

Prior to the filing of a Notice of Appeal, each time the patent owner responds to this communication, the third party requester of the inter partes reexamination may once file written comments within a period of 30 days from the date of service of the patent owner's response. This 30-day time period is statutory (35 U.S.C. 314(b)(2)), and, as such, it cannot be extended. See also 37 CFR 1.947.

If an ex parte reexamination has been merged with the inter partes reexamination, no responsive submission by any ex parte third party requester is permitted.

All correspondence relating to this inter partes reexamination proceeding should be directed to the Central Reexamination Unit at the mail, FAX, or hand-carry addresses given at the end of the communication enclosed with this transmittal.

Decision on Petition for Extension of Time in Reexamination	Control No.: 95/001,747

MAILED

NOV 29 2011

CENTRAL REEXAMINATION UNIT

1. THIS IS A DECISION ON THE PETITION FILED 11/16/2011.

2. THIS DECISION IS ISSUED PURSUANT TO:
   - A. ☐ 37 CFR 1.550(c) – The time for taking any action by a patent owner in an *ex parte* reexamination proceeding will be extended only for sufficient cause and for a reasonable time specified.
   - B. ☒ 37 CFR 1.956 – The time for taking any action by a patent owner in an *inter partes* reexamination proceeding will be extended only for sufficient cause and for a reasonable time specified.

   The petition is before the Central Reexamination Unit for consideration.

3. FORMAL MATTERS

   Patent owner requests that the period for responding to the Office action mailed on 11/04/2011, which sets a two (2) month period for filing a response thereto, be extended by one (1) month.

   - A. ☒ Petition fee per 37 CFR §1.17(g)):
     - i. ☒ Petition includes authorization to debit a deposit account.
     - ii. ☐ Petition includes authorization to charge a credit card account.
     - iii. ☐ Other: _____.
   - B. ☒ Proper certificate of service was provided. (Not required in reexamination where patent owner is requester.)
   - C. ☒ Petition was timely filed.
   - D. ☒ Petition properly signed.

4. DECISION (See MPEP 2265 and 2665)
   - A. ☐ Granted or ☐ Granted-in-part for _____, because petitioner provided a factual accounting that established sufficient cause. (See 37 CFR 1.550(c) and 37 CFR 1.956).
     - ☐ Other/comment: _____.
   - B. ☒ Dismissed because:
     - i. ☐ Formal matters (See unchecked box(es) (A, B, C and/or D) in section 4 above).
     - ii. ☐ Petitioner failed to provide a factual accounting of reasonably diligent behavior by all those responsible for preparing a response to the outstanding Office action within the statutory time period.
     - iii. ☐ Petitioner failed to explain why, in spite of the action taken thus far, the requested additional time is needed.
     - iv. ☐ The statements provided fail to establish sufficient cause to warrant extension of the time for taking action (See attached).
     - v. ☐ The petition is moot.
     - vi. ☒ Other/comment: See Attached comments.

5. CONCLUSION

   Telephone inquiries with regard to this decision should be directed to Sudhanshu C. Pathak at 571-272-5509. In his/her absence, calls may be directed to Mark Reinhart at 571-272-1611 in the Central Reexamination Unit.

/Sudhanshu C. Pathak/
[*Signature*]

SPE, CRU 3992
(Title)

In consideration of providing the patent owner with a fair opportunity to present an argument against any attack on the patent as balanced with the statutory mandate of conducting reexamination proceedings with special dispatch that the Office must fully consider the facts presented in any petitions for extension of time. This is the first request for extension of time in this proceeding. While the petition speaks to the considerations of not receiving the Office until November 14, 2011, however the Petition does not explicitly provide the reason why there was the delay in receiving the Office Action. This is noted and is not persuasive. In considering the other issues raised, it is Patent owner who must exercise diligence in responding to the Office action. It is agreed that patent owner needs to be given opportunity to complete all aspects of investigation prior to responding to the Office action in an *inter partes* reexamination proceedings. The requirement for reasonably diligent behavior by patent owner includes a resource management. Resource management takes into account planned holidays, vacations and other business related travels not related to this proceeding. This is noted and is not persuasive.

The petition for extension of time is hereby denied.

UNITED STATES PATENT AND TRADEMARK OFFICE

Commissioner for Patents
United States Patent and Trademark Office
P.O. Box 1450
Alexandria, VA 22313-1450
www.uspto.gov

Decision Date : November 29, 2011

In re Application of :

Alan Drizen

Application No : 95001748

Filed : 08-Sep-2011

Attorney Docket No : 033083.0009-US09

DECISION ON REQUEST TO WITHDRAW AS ATTORNEY/AGENTOF RECORD

This is an electronic decision on the Request to Withdraw as attorney or agent of record under 37 CFR § 1.36(b), filed November 29, 2011

The request is **APPROVED.**

The request was signed by Tanya E. Harkins (registration no. 52993) on behalf of all attorneys/agents associated with Customer Number 20529 . All attorneys/agents associated with Cusotmer Number 20529 have been withdrawn.

Since there are no remaining attorneys of record, all future communications from the Office will be directed to the first named inventor or assignee that has properly made itself of record pursuant to 37 CFR 3.71, with correspondence address:

Name Kevin Drizen

Name2

Address 1 7 Timber Court

Address 2

City Georgetown Ontario

State

Postal Code L7G 4S4

Country CA

As a reminder, requester is required to inform the first named inventor or assignee that has properly made itself of record pursuant to 37 CFR 3.71 of the electronically processed petition.

Telephone inquiries concerning this decision should be directed to the Patent Electronic Business Center (EBC) at 866-217-9197.

Office of Petitions

Doc Code: PET.AUTO **Document Description: Petition automatically granted by EFS-Web**	PTO/SB/83 U.S. Patent and Trademark Office Department of Commerce

Electronic Petition Request	**REQUEST FOR WITHDRAWAL AS ATTORNEY OR AGENT AND CHANGE OF CORRESPONDENCE ADDRESS**
Application Number	95001748
Filing Date	08-Sep-2011
First Named Inventor	Alan Drizen
Art Unit	3991
Examiner Name	EVELYN HUANG
Attorney Docket Number	033083.0009-US09
Title	TOPICAL DRUG PREPARATIONS

◉ Please withdraw me as attorney or agent for the above identified patent application and the practitioners of record associated with Customer Number: 20529

The reason(s) for this request are those described in 37 CFR:

10.40(b)(4)

Certifications

☒ I/We have given reasonable notice to the client, prior to the expiration of the response period, that the practitioner(s) intend to withdraw from employment

☒ I/We have delivered to the client or a duly authorized representative of the client all papers and property (including funds) to which the client is entitled

☒ I/We have notified the client of any responses that may be due and the time frame within which the client must respond

Change the correspondence address and direct all future correspondence to the first named inventor or assignee that has properly made itself of record pursuant to 37 CFR 3.71:

Name	Kevin Drizen
Address	7 Timber Court
City	Georgetown Ontario
State	
Postal Code	L7G 4S4
Country	CA

I am authorized to sign on behalf of myself and all withdrawing practitioners.	
Signature	/Tanya E. Harkins/
Name	Tanya E. Harkins
Registration Number	52993

UNITED STATES PATENT AND TRADEMARK OFFICE

UNITED STATES DEPARTMENT OF COMMERCE
United States Patent and Trademark Office
Address: COMMISSIONER FOR PATENTS
P.O. Box 1450
Alexandria, Virginia 22313-1450
www.uspto.gov

APPLICATION NO.	FILING DATE	FIRST NAMED INVENTOR	ATTORNEY DOCKET NO.	CONFIRMATION NO.
95/001,749	09/08/2011	7422053	0375.0001L3	7311

27896 7590 01/17/2012

EDELL, SHAPIRO & FINNAN, LLC
1901 RESEARCH BOULEVARD
SUITE 400
ROCKVILLE, MD 20850

EXAMINER	
ART UNIT	PAPER NUMBER

DATE MAILED: 01/17/2012

Please find below and/or attached an Office communication concerning this application or proceeding.

UNITED STATES PATENT AND TRADEMARK OFFICE

UNITED STATES DEPARTMENT OF COMMERCE
United States Patent and Trademark Office
Address: COMMISSIONER FOR PATENTS
P.O. Box 1450
Alexandria, Virginia 22313-1450
www.uspto.gov

APPLICATION NO.	FILING DATE	FIRST NAMED INVENTOR	ATTORNEY DOCKET NO.	CONFIRMATION NO.
95/001,749	09/08/2011	7422053	0375.0001L3	7311

27896 7590 01/17/2012

EDELL, SHAPIRO & FINNAN, LLC
1901 RESEARCH BOULEVARD
SUITE 400
ROCKVILLE, MD 20850

EXAMINER	
ART UNIT	PAPER NUMBER

DATE MAILED: 01/17/2012

Please find below and/or attached an Office communication concerning this application or proceeding.

UNITED STATES PATENT AND TRADEMARK OFFICE

Commissioner for Patents
United States Patents and Trademark Office
P.O.Box 1450
Alexandria, VA 22313-1450
www.uspto.gov

DO NOT USE IN PALM PRINTER

THIRD PARTY REQUESTER'S CORRESPONDENCE ADDRESS
BRADLEY J. THORSON
PATTERSON THUENTE CHRISTENSEN PEDERSEN, P.A.
4800 IDS CENTER, 80 SOUTH 8TH STREET
MINNEAPOLIS, MN 55402

Date: MAILED

JAN 17 2012

CENTRAL REEXAMINATION UNIT

Transmittal of Communication to Third Party Requester
Inter Partes Reexamination

REEXAMINATION CONTROL NO. : 95001749
PATENT NO. : 7422053
TECHNOLOGY CENTER : 3999
ART UNIT : 3993

Enclosed is a copy of the latest communication from the United States Patent and Trademark Office in the above identified Reexamination proceeding. 37 CFR 1.903.

Prior to the filing of a Notice of Appeal, each time the patent owner responds to this communication, the third party requester of the inter partes reexamination may once file written comments within a period of 30 days from the date of service of the patent owner's response. This 30-day time period is statutory (35 U.S.C. 314(b)(2)), and, as such, it cannot be extended. See also 37 CFR 1.947.

If an ex parte reexamination has been merged with the inter partes reexamination, no responsive submission by any ex parte third party requester is permitted.

All correspondence relating to this inter partes reexamination proceeding should be directed to the Central Reexamination Unit at the mail, FAX, or hand-carry addresses given at the end of the communication enclosed with this transmittal.

UNITED STATES PATENT AND TRADEMARK OFFICE

Commissioner for Patents
United States Patent and Trademark Office
P.O. Box 1450
Alexandria, VA 22313-1450
www.uspto.gov

Edell, Shapiro & Finnan, LLC
1901 Research Boulevard
Suite 400
Rockville, MD 20850

(For Patent Owner)

MAILED

JAN 17 2012

CENTRAL REEXAMINATION UNIT

Patterson, Thuente, Christensen, & Pedersen, P.A.
Attn: Bradley J. Thorson
4800 IDS Center, 80 South 8th Street
Minneapolis, MN 55402-2100

(For Requester)

In re Siu
Reexamination Proceeding
Control No. 95/001,749
Filed: September 8, 2011
For: U.S. Patent No. 7,422,053

: DECISION ON
: PETITION
: UNDER
: 37 CFR 1.181
: AND OPPOSITION
: BY THIRD PARTY
: REQUESTER

The paper filed by patent owner on December 2, 2011, styled as "Petition Under 37 CFR § 1.181 to Vacate an *Ultra Vires* Reexamination Order" is before the Group Director of the Central Reexamination Unit (CRU). Patent owner requests that the order granting reexamination, mailed November 18, 2011, be vacated arguing that the reexamination is prohibited under 35 USC § 317 and 37 CFR 1.907. Also before the Group Director of the CRU is a paper filed by third party requester on December 9, 2011, styled as "Opposition of 3rd Party Requester to Patent Owner's Petition Under 37 CFR 1. §181 to Vacate an *Ultra Vires* Reexamination Order." Third party requester argues that the reexamination order is fully authorized by law and is not *ultra vires* and thus, patent owner's petition to vacate must be denied.

The third party requester's opposition petition is granted to the extent that the patent owner's petition is denied for the reasons set forth below.

REVIEW OF FACTS

1. The '053 patent issued on September 9, 2008. The '053 patent is a continuation of application no. 10/390,773, filed March 9, 2003, which is now abandoned.

2. On September 8, 2011, the third party requester deposited a request for *inter partes* reexamination, and the resulting reexamination proceeding was assigned Control No. 95/001,749 (hereinafter, the '749 proceeding).

3. Reexamination was requested for claims 1-5, 9, 18-20 and 24 of the '053 patent.

4. A Notice of Reexamination Request Filing Date was issued on November 5, 2011.

5. An order granting the request for reexamination for claims 1-5, 9, 18-20 and 24 was issued on November 18, 2011.

6. On December 2, 2011, the patent owner filed a petition under 37 CFR § 1.181.

7. On December 9, 2011, the third party requester filed an opposition to patent owner's petition.

Arguments Presented

Patent owner argues that 35 USC 371(a) prohibits the filing of a second *inter partes* reexamination request until the *inter partes* reexamination certificate issues and publishes in the first *inter partes* reexamination request, unless proper authorization is obtained from the Director. Here the first *inter partes* reexamination, assigned control no. 95/000,534 (hereinafter, the '534 proceeding), is still pending. Thus, patent owner argues that since an *inter partes* reexamination certificate has neither issued nor published in the '534 proceeding and the third party requester has not obtained proper authorization from the Director, the grant of reexamination in the '749 proceeding should be vacated. Patent owner also notes that the references asserted in the '749 proceeding were made of record in the '053 patent during the '534 proceeding.

Third party requester argues that the request of the '534 proceeding was only partially granted, where reexamination was ordered for claims 8, 11-17 and 22 of the '053 patent but not ordered for claims 1-7, 9-10, 18-21 and 23-25. Third party requester contested the denial of reexamination for claims 1-7, 9-10, 18-21 and 23-25 through a series of petitions in

the '534 proceeding. All petitions were either denied or dismissed. Third party requester points out that a petition decision mailed March 23, 2011 in the '534 proceeding contained the following passage under "Requester's Recourse" that authorized the filing of a subsequent *inter partes* reexamination request:

> In the event that the third party requester desires to initiate an *inter partes* reexamination of the '053 patent, requester may wish to consider filing a new and complete request for *inter partes* reexamination, (which new request includes the missing information identified above). This decision is without prejudice to the right of the requester to file a new request for reexamination to address the issues noted. The requester is not barred from filing a new request for *inter partes* reexamination as argued by the petitioner because the estoppel provision of 35 U.S.C. 317(b) to not attach since the reexamination has not been instituted. The request must set forth a substantial new question of patentability that is different from the substantial new question of patentability set forth in the '534 proceeding.
>
> The requester can file a new request for *inter partes* reexamination and provide an explanation of the manner and pertinence of applying each cited document to the patent claims for which reexamination is requested, as required by 37 CFR 1.915(b)(3). Each substantial new question of patentability or proposed ground of rejection ("SNQ/proposed rejection") must be identified separately. The patent claims applying to each identified SNQ/proposed rejection must be listed. Then, for each identified SNQ/proposed rejection, the request must explain how the cited documents identified for that SNQ/proposed rejection are applied to meet/teach the claim limitations for each listed claim, to thus establish the identified SNQ/proposed rejection. Where references are applied in combination, each combination must be individually identified, and the basis for forming the identified combination of references must be supplied.

Third party requester also points out that the request for *inter partes* reexamination in the '749 proceeding involves only claims 1-5, 9, 18-10 and 24 of the '053 patent - all of which claims are not subject to reexamination in the '534 proceeding.

DECISION

The facts of the instant proceeding support third party requester's arguments and do not support patent owner's arguments. The record is clear that the grant of reexamination in the '749 proceeding was specifically authorized by the Director. The petition decision of March 23, 2011 in the '534 proceeding is to the point: third party requester was specifically authorized to file a subsequent *inter partes* reexamination request. Furthermore, third party requester highlighted this authorization in the request filed September 8, 2011 and the reexamination order for the '749 proceeding pointed to the authorization on the first

page of the order granting reexamination. In addition, the '534 proceeding only involves claims 8, 11-17 and 22 of the '053 patent whereas the '740 proceeding involves claims 1-5, 9, 18-20 and 24. There is no overlap of the claims being reexamined in the '534 proceeding and the claims being reexamined in the '749 proceeding. Accordingly, the third party requester's opposition petition is granted to the extent that the patent owner's petition is denied

CONCLUSION

1. This decision is final and nonappealable. 37 CFR 1.927. No further communication on this matter will be acknowledged or considered.

2. Third party requester's opposition petition is GRANTED to the extent that patent owner's petition is DENIED.

3. Telephone inquiries related to this decision should be directed to Andres Kashnikow, Special Program Examiner, at (571) 272-4361.

Irem Yucel, Director
Central Reexamination Unit

UNITED STATES PATENT AND TRADEMARK OFFICE

Commissioner for Patents
United States Patent and Trademark Office
P.O. Box 1450
Alexandria, VA 22313-1450
www.uspto.gov

Thomas, Kayden, Horstemeyer & Risley, LLP (For Patent Owner)
400 Interstate North Parkway SE
Suite 1500
Atlanta, GA 30339

MAILED

MAR 23 2012

CENTRAL REEXAMINATION UNIT

Jigang Jin (For Requester)
Mitchell & Company, Law Offices
4 Embarcadero Center, Suite 1400
San Francisco, CA 94111

In re *Bekele*
Reexamination Proceeding
Control No. 95/001,766
Filed: September 16, 2011
For: U.S. Patent No. 7,643,274

: DECISION ON
: PETITION UNDER
: 37 CFR 1.181

The paper filed by requester on January 13, 2012, styled as "Petition Under 37 C.F.R. § 1.181 for Review of Examiner's decision to Not Reexam Certain claims of a Patent Ordered for *Inter Partes* Reexamination" is before the Director of the Central Reexamination Unit (CRU). Petitioner, the reexamination requester, seeks review of the order granting the request for *Inter Partes* Reexamination, mailed December 13, 2011. The order granted reexamination as to claims 1-8, 16 and 18-20 of U.S. Patent No. 7,643,274 (hereinafter the '274 patent), but denied reexamination as to claims 9-15 and 17. Specifically, petitioner requests that the CRU Director find that the examiner erred in his decision to not grant reexamination of claims 9-15[1].

The petition is denied for the reasons set forth below.

REVIEW OF FACTS

1. The '274 patent issued on January 5, 2010.

[1] Petitioner mentions claim 17 in the Section III "Statement of Facts" at page 5 of the petition. However, Section IV "Argument and Points to Be Reviewed" of the petition does not discuss the examiner's refusal to grant reexamination with respect to claim 17. As petitioner has thus not presented any argument as to why reexamination should be granted for claim 17, this petition decision does not address the propriety of the examiner's refusal to grant reexamination with respect to claim 17. As the examiner has noted in the Office action mailed December 13, 2011, concurrent with the order, claim 17 is not subject to reexamination.

2. On September 16, 2011, a third party requester deposited a request for *inter partes* reexamination for claims 1-20 of the '274 patent, and the resulting reexamination proceeding was assigned Control No. 95/001,766 (hereinafter, the '766 proceeding).

3. On December 13, 2011, an order granting the request for reexamination as to claims 1-8, 16 and 18-20 but denying reexamination as to claims 9-15 and 17 of the '274 patent was mailed. On even date, an Office action rejecting claims 1-8, 16 and 18-20 was mailed.

4. On January 13, 2012, the third party requester timely filed the above-mentioned petition under 37 CFR § 1.181.

Petitioner's Grounds in Support of the Requested Relief

The following is a list of the prior art cited by requester:

1. U.S. Patent No. 5,835,344 to Alexander (hereinafter "Alexander");
2. U.S. Patent No. 6,480,377 to Genest et al. (hereinafter "Genest");
3. U.S. Patent No. D446,196 to Chamberlain et al. (hereinafter "Chamberlain");
4. U.S. Patent Application Publication No. 2005/0200608 to Ulla et al. (hereinafter "Ulla"); and
5. "See-Thru Sexy Hard Case 3-Pack" by Speck Products, dated December 25, 2005 (hereinafter "Speck").

Petitioner (the third party requester) alleges that the examiner incorrectly denied the request for reexamination of claims 9-15 because the examiner's grounds for declining reexamination turned on the absence of a trivial feature that was not disclosed in the prior art. Petition at page 1. Petitioner argues that claims 9-15 of the '274 patent require a laptop cover where the cover encompasses *all four* raised sides of the keyboard and *all four* raised sides of the display portion. Petition at pages 1-2. Petitioner admits that the Alexander reference encompasses all four raised sides of the keyboard portion *but only three* of the raised sides covering the display portion. Petition at page 2. Petitioner then argues that adding one additional raised edge to the portion covering the display portion would be a mere predictable variation of the laptop cover of Alexander. Petition at page 2.

DECISION

I. Standard of Review

35 USC 312(c) and 37 CFR 1.927 provide for the filing of a petition to review an examiner's determination refusing to order *inter partes* reexamination. The CRU Director's review on petition is *de novo*. Therefore, the review will determine whether the examiner's refusal to order reexamination for claims 9-15 was proper and will not necessarily indicate agreement or disagreement with every aspect of the examiner's rationale for the denial of the request to order reexamination for claims 9-15 of the '274 patent. The review will not necessarily consider

evidence not of record at the time of the request for reexamination (e.g., evidence made of record for the first time in the petition).

II. Relevant Regulations for *Inter Partes* Reexamination

37 C.F.R. § 1.913 states in part:

> (a) Except as provided for in § 1.907 and in paragraph (b) of this section, any person other than the patent owner or its privies may, at any time during the period of enforceability of a patent which issued from an original application filed in the United States on or after November 29, 1999, file a request for *inter partes* reexamination by the Office of any claim of the patent on the basis of prior art patents or printed publications cited under § 1.501.

37 C.F.R. § 1.915(b) states in part:

> (3) A statement pointing out, based on the cited patents and printed publications, each showing of a reasonable likelihood that the requester will prevail with respect to at least one of the claims challenged in the request, and a detailed explanation of the pertinency and manner of applying the patents and printed publications to every claim for which reexamination is requested.

37 C.F.R. § 1.923 states:

> Within three months following the filing date of a request for *inter partes* reexamination under § 1.915, the examiner will consider the request and determine whether or not the request and the prior art establish a reasonable likelihood that the requester will prevail with respect to at least one of the claims challenged in the request. The examiner's determination will be based on the claims in effect at the time of the determination, will become a part of the official file of the patent, and will be mailed to the patent owner at the address as provided for in § 1.33(c) and to the third party requester. If the examiner determines that the request has not established a reasonable likelihood that the requester will prevail with respect to at least one of the challenged claims, the examiner shall refuse the request and shall not order *inter partes* reexamination.

37 C.F.R. § 1.927 states:

> The third party requester may seek review by a petition to the Director under § 1.181 within one month of the mailing date of the examiner's determination refusing to order *inter partes* reexamination. Any such petition must comply with § 1.181(b). If no petition is timely filed or if the decision on petition affirms that a reasonable likelihood that the requester will prevail with respect to at least one of the claims challenged in the request has not been established, the determination shall be final and nonappealable.

37 C.F.R. § 1.931(a) states:

> If it is found that there is a reasonable likelihood that the requester will prevail with respect to at least one of the claims challenged in the request, the determination will include an order for *inter partes* reexamination of the patent for resolution of the question of whether the requester will prevail.

III. The Legal Standard for Ordering Reexamination

A review of 35 USC 311-317 and 37 CFR 1.915, 1.919, and 1.923, after implementation of the Leahy-Smith America Invents Act[2], shows that *inter partes* reexamination of a United States Patent is only authorized when a consideration of prior art consisting of patents or printed publications establishes that there is a reasonable likelihood that the requester will prevail with respect to at least one of the claims challenged in the request. In particular, 35 USC 311(a) requires that a request for *inter partes* reexamination be based upon prior art as set forth in 35 USC 301, that is, prior art consisting of patents or printed publications, while 37 CFR 1.915(b)(3) requires that a request for *inter partes* reexamination include "a statement ... showing that there is a reasonable likelihood that the requester will prevail with respect to at least one of the claims challenged in the request."

Section 6(c)(3)(A) of the Leahy-Smith America Invents Act amended 35 USC 312 and 313 to delete any reference to the SNQ standard, and provide, in place of each deletion, language requiring the information presented in a request for *inter partes* reexamination (filed pursuant to 35 USC 311) to show that there is a reasonable likelihood that the requester will prevail with respect to at least one of the claims challenged in the request. With respect to the reasonable likelihood standard, House Rep. 112–98 (Part 1), 112th Cong., 1st Sess., provides, in connection with *inter partes* review, the following:

> "The threshold for initiating an inter partes review is elevated from 'significant new question of patentability'—a standard that currently allows 95% of all requests to be granted—to a standard requiring petitioners to present information showing that their challenge has a reasonable likelihood of success." H.R. Rep. No. 112–98 (Part 1), at 47.

Similarly, with respect to the reasonable likelihood standard, a Senate debate in the Congressional Record at S1375 (March 8, 2011), 112th Cong., 1st Sess., provides, in connection with *inter partes* review, the following:

> "Among the most important protections for patent owners added by the present bill are its elevated thresholds for instituting inter partes and post-grant reviews. The present bill dispenses with the test of "substantial new question of patentability," a standard that currently allows 95% of all requests to be granted. It instead imposes thresholds that require petitioners to present information that creates serious doubts about the patent's validity. ...
>
> ...The "reasonable likelihood" test is currently used in evaluating whether a party is entitled to a preliminary injunction, and effectively requires the petitioner to present a prima facie case justifying a rejection of the claims in the patent."

To implement this change to the standard of granting an *inter partes* reexamination request, the Office revised the rules of practice for *inter partes* reexamination by amending 37 CFR 1.915, 1.923, 1.927, and 1.931 to delete any reference to the SNQ standard for granting reexamination, and insert in its place reference to the newly enacted "reasonable likelihood" standard. See "Revision of Standard for Granting an Inter Partes Reexamination Request: Final Rule," 76 Fed. Reg. 59055 (Sept. 23, 2011). The relevant regulations, as amended, appear in subsection II.

---

[2] Public Law 112-29, 125 Stat. 284 (2011).

IV. Analysis of the Request for Reexamination of the '274 patent

The Request in the instant proceeding sets forth the following proposed rejections:

1. Claims 1-20 are rendered obvious by the combined teachings of Alexander and Genest.

2. Claims 1-20 are rendered obvious by the combined teachings of Alexander and Chamberlain.

3. Claims 1-20 are rendered obvious by the combined teachings of Alexander and Ulla.

4. Claims 1-20 are rendered obvious by the combined teachings of Alexander and Speck.

5. Claims 1-20 are rendered obvious by the combined teachings of Speck and Alexander.

The request was granted in the December 13, 2011 order granting the request for *Inter Partes* Reexamination as to claims 1-8, 16 and 18-20 but denied as to claims 9-15 and 17[3].

The petition raised a general issue regarding claims 9-15, as indicated above, instead of framing issues on the basis of the proposed rejections. Therefore, this decision will follow the format established by the petition to address the general issue raised by the petition, and will only address the proposed rejections discussed in the petition in detail.

Section 6(c)(3)(A) of the Leahy-Smith America Invents Act provides a provision under which a request for *inter partes* reexamination will not be granted unless the information presented in the request shows that there is a reasonable likelihood that the requester will prevail with respect to at least one of the claims challenged in the request.

In order to show a reasonable likelihood of prevailing, the request, in view of the prior art, must set forth a proposed ground of rejection for a claim(s) that addresses each and every limitation set forth in the claim(s).

The examiner found that the request failed to make a showing of a reasonable likelihood of prevailing (RLP) because Alexander did not disclose the first planar element 202 as having a raised edge "for covering a section of *all sides* of the display portion"; that raised edges 286, 288 and 290 cover only three of the four sides of the display panel 280. Order at pages 6-7 and 10-11. The examiner additionally found that Genest and Ulla do not cure this deficiency. Order at pages 6-7 and 10-11. The examiner also found that since claims 10-15 depend from claim 9, the

[3] Claim 17 will not be further discussed for the reasons set forth in fn. 1. It should also be noted that the order sets forth additional reasons for not granting the request with respect to claim 9-15 at pages 7-8 and 12-13. Specifically, the examiner found that the proposed combinations of Alexander and Chamberlain, Alexander and Speck and Speck and Alexander do not present an RLP showing. However, petitioner has not raised arguments with respect to any of these proposed combinations. Accordingly, these combinations will not be addressed or discussed.

request failed to make an RLP showing for claims 10-15 for the same reasons as discussed with respect to claim 9. Order at pages 7 and 11.

In response to the examiner's findings, petitioner argues that, with respect to claim 9, the claimed feature allegedly lacking in the teachings of Alexander, Genest and Ulla – a planar element having a raised edge for covering a section of all sides of the display portion – is nothing more than an arrangement of old elements with each performing the same function it had been known to perform and thus, yields no more than one would expect from such an arrangement. Petition at page 6. Petitioner argues that Alexander teaches a raised edge for covering at least three sides of the display portion and that adding a fourth wall would do no more than yield predictable results as it would define a recess to receive and protect a laptop computer's display portion (a function described in Alexander). Petition at page 7. Petitioner also argues that Alexander suggests doing so in the disclosure with respect to the lower case body 220 that includes four walls. Petition at page 7. Petitioner thus argues that going from seven sides to eight sides is not such an inventive leap as to deserve a patentable claim. Petition at page 7. Petitioner adds that prior art of record from the original prosecution, such as Song, U.S. Patent No. 5,682,993, shows using a raised edge to cover a section of all sides of a display portion. Petition at page 7.

A review of the record finds that the examiner correctly determined that Alexander in combination with either Genest or Ulla does not present an RLP showing for claims 9-15. Petitioner's argument that a planar element having four raised edges for covering a section of all sides of the display portion is nothing more than an arrangement of old elements is misplaced. Although the request specifically set forth proposed rejections for claims 9-15 for Alexander in view of Genest and Alexander in view of Ulla, a review of the request reveals that petitioner did not propose either Genest or Ulla as teaching the planar element having four raised edges for covering a section of all sides of the display portion. Genest and Ulla were set forth by petitioner to teach the plurality of tabs also recited in claim 9. See, e.g., request at page 29. To the contrary, the request indicates that petitioner considered Alexander to supply this teaching. See, e.g., pages 29 and 58 of the request. Then, in the petition, petitioner does not quibble with the examiner's determination that Alexander only teaches three raised edges. Petition at pages 2, 5 and 6. Petitioner also does not even attempt to argue that either Genest or Ulla teach the four raised edges. Instead, petitioner attempts to insert a different argument regarding the application of Alexander, namely, that Alexander implies the four raised edges or, at the very least, the previously-applied prior art teaches it. Petition at pages 6-8.

Petitioner cannot now, on petition, present a new argument regarding the application of Alexander to claims 9-15 and state that the examiner erred in making such an application. Petitioner cannot introduce new evidence to establish that the examiner erred in the determination, e.g., effectively bootstrap new arguments into being "new evidence" to establish a reasonable likelihood of prevailing in the request for reexamination in the '766 proceeding. The requirement that the *request* must present a reasonable likelihood of prevailing (RLP) on at least one claim places the initial burden of proof on the requester to present a complete explanation in the request. The CRU Director's *de novo* review is based upon the record at the time the examiner made the determination. The examiner properly considered the proposed rejections provided in the request: Alexander in view of Genest and Alexander in view of Ulla. The RLP analysis in the determination is consistent with the proposed rejections as framed in the request.

The examiner correctly found that Alexander did not teach the four raised edges and that neither Genest nor Ulla cured this deficiency, as they did not teach this feature either. Therefore, upon review of the record, petitioner's arguments are not persuasive.

The *de novo* review on the record of the request for reexamination in the '766 reexamination proceeding, undertaken in light of the arguments presented in the petition supports the conclusion that the request for reexamination did not establish that there is a reasonable likelihood that the requester will prevail with respect to claims 9-15 in the '274 patent. Accordingly, the petition is denied.

CONCLUSION

1. Based on a *de novo* review of the record as a whole, the PETITION is DENIED.

2. This decision is final and nonappealable. 37 CFR 1.927. No further communication on this matter will be acknowledged or considered.

3. Telephone inquiries related to this decision should be directed to Andres Kashnikow, Supervisory Patent Examiner, at (571) 272-4361.

Irem Yuksel
Director
Central Reexamination Unit

UNITED STATES PATENT AND TRADEMARK OFFICE

Commissioner for Patents
United States Patent and Trademark Office
P.O. Box 1450
Alexandria, VA 22313-1450
www.uspto.gov

Thomas, Kayden, Horstemeyer & Risley, LLP (For Patent Owner)
400 Interstate North Parkway SE
Suite 1500
Atlanta, GA 30339

MAILED

MAR 23 2012

CENTRAL REEXAMINATION UNIT

Jigang Jin (For Requester)
Mitchell & Company, Law Offices
4 Embarcadero Center, Suite 1400
San Francisco, CA 94111

In re *Bekele* :
Reexamination Proceeding : DECISION ON
Control No. 95/001,767 : PETITION UNDER
Filed: September 16, 2011 : 37 CFR 1.181
For: U.S. Patent No. 7,907,400 :

The paper filed by requester on January 13, 2012, styled as "Petition Under 37 C.F.R. § 1.181 for Review of Examiner's decision to Not Reexam Certain claims of a Patent Ordered for *Inter Partes* Reexamination" is before the Director of the Central Reexamination Unit (CRU). Petitioner, the reexamination requester, seeks review of the order granting the request for *Inter Partes* Reexamination, mailed December 13, 2011. The order granted reexamination as to claims 1-8 and 26-39 of U.S. Patent No. 7,907,400 (hereinafter the '400 patent), but denied reexamination as to claims 9-25 and 40-53. Specifically, petitioner requests that the CRU Director find that the examiner erred in his decision to not grant reexamination of claims 9-25 and 40-53[1].

The petition is denied for the reasons set forth below.

REVIEW OF FACTS

1. The '400 patent issued on March 15, 2011.

[1] Petitioner mentions claim 17 in the Section III "Statement of Facts" at page 5 of the petition. However, Section IV "Argument and Points to Be Reviewed" of the petition does not discuss the examiner's refusal to grant reexamination with respect to claim 17. As petitioner has thus not presented any argument as to why reexamination should be granted for claim 17, this petition decision does not address the propriety of the examiner's refusal to grant reexamination with respect to claim 17. As the examiner has noted in the Office action mailed December 13, 2011, concurrent with the order, claim 17 is not subject to reexamination.

2. On September 16, 2011, a third party requester deposited a request for *inter partes* reexamination for claims 1-53 of the '400 patent, and the resulting reexamination proceeding was assigned Control No. 95/001,767 (hereinafter, the '767 proceeding).

3. On December 13, 2011, an order granting the request for reexamination as to claims 1-8 and 25-39 but denying reexamination as to claims 9-25 and 40-53 of the '400 patent was mailed. On even date, an Office action rejecting claims 1-8 and 26-39 was mailed.

4. On January 13, 2012, the third party requester timely filed the above-mentioned petition under 37 CFR § 1.181.

Petitioner's Grounds in Support of the Requested Relief

The following is a list of the prior art cited by requester:

1. U.S. Patent No. 5,835,344 to Alexander (hereinafter "Alexander");
2. U.S. Patent No. 6,480,377 to Genest et al. (hereinafter "Genest");
3. U.S. Patent No. D446,196 to Chamberlain et al. (hereinafter "Chamberlain");
4. U.S. Patent Application Publication No. 2005/0200608 to Ulla et al. (hereinafter "Ulla"); and
5. "See-Thru Sexy Hard Case 3-Pack" by Speck Products, dated December 25, 2005 (hereinafter "Speck").

Petitioner (the third party requester) raises the following two issues in the petition:

1) Petitioner alleges that the examiner incorrectly denied the request for reexamination of claims 9-15 because the examiner's grounds for declining reexamination turned on the absence of a trivial feature that was not disclosed in the prior art. Petition at page 1. Petitioner argues that claims 9-15, 21-25 and 40-44 of the '400 patent require a laptop cover where the cover encompasses *all four* raised sides of the keyboard and *all four* raised sides of the display portion. Petition at page 2. Petitioner admits that the Alexander reference encompasses all four raised sides of the keyboard portion *but only three* of the raised sides covering the display portion. Petition at page 2. Petitioner then argues that adding one additional raised edge to the portion covering the display portion would be a mere predictable variation of the laptop cover of Alexander. Petition at page 2.

2) Petitioner also argues that claims 16, 18-20 and 45-53 of the '400 patent require a plurality of protruding tabs located *on opposing sides* of a laptop cover. Petition at page 2. Petitioner argues that Genest discloses placing multiple tabs *on the same side* of the cover, but placing tabs on opposing sides of a cover would be a mere predictable variation of the laptop cover taught by Alexander. Petition at page 2. Petitioner also argues that Alexander teaches a set of "release ports" on opposing sides that serve the same function as tabs (holding the laptop cover to the laptop). Petition at page 2. Petitioner than argues that replacing the opposite facing "release ports" with the opposite facing tabs would be an obvious variation. Petition at page 2.

DECISION

I. Standard of Review

35 USC 312(c) and 37 CFR 1.927 provide for the filing of a petition to review an examiner's determination refusing to order *inter partes* reexamination. The CRU Director's review on petition is *de novo*. Therefore, the review will determine whether the examiner's refusal to order reexamination for claims 9-16, 18-25 and 40-53 was proper and will not necessarily indicate agreement or disagreement with every aspect of the examiner's rationale for the denial of the request to order reexamination for claims 9-16, 18-25 and 40-53 of the '400 patent. The review will not necessarily consider evidence not of record at the time of the request for reexamination (e.g., evidence made of record for the first time in the petition).

II. Relevant Regulations for *Inter Partes* Reexamination

37 C.F.R. § 1.913 states in part:

> (a) Except as provided for in § 1.907 and in paragraph (b) of this section, any person other than the patent owner or its privies may, at any time during the period of enforceability of a patent which issued from an original application filed in the United States on or after November 29, 1999, file a request for *inter partes* reexamination by the Office of any claim of the patent on the basis of prior art patents or printed publications cited under § 1.501.

37 C.F.R. § 1.915(b) states in part:

> (3) A statement pointing out, based on the cited patents and printed publications, each showing of a reasonable likelihood that the requester will prevail with respect to at least one of the claims challenged in the request, and a detailed explanation of the pertinency and manner of applying the patents and printed publications to every claim for which reexamination is requested.

37 C.F.R. § 1.923 states:

> Within three months following the filing date of a request for *inter partes* reexamination under § 1.915, the examiner will consider the request and determine whether or not the request and the prior art establish a reasonable likelihood that the requester will prevail with respect to at least one of the claims challenged in the request. The examiner's determination will be based on the claims in effect at the time of the determination, will become a part of the official file of the patent, and will be mailed to the patent owner at the address as provided for in § 1.33(c) and to the third party requester. If the examiner determines that the request has not established a reasonable likelihood that the requester will prevail with respect to at least one of the challenged claims, the examiner shall refuse the request and shall not order *inter partes* reexamination.

37 C.F.R. § 1.927 states:

> The third party requester may seek review by a petition to the Director under § 1.181 within one month of the mailing date of the examiner's determination refusing to order *inter partes* reexamination. Any such petition must comply with § 1.181(b). If no petition is timely filed or if the decision on petition affirms that a reasonable likelihood that the requester will prevail with

> respect to at least one of the claims challenged in the request has not been established, the determination shall be final and nonappealable.

37 C.F.R. § 1.931(a) states:

> If it is found that there is a reasonable likelihood that the requester will prevail with respect to at least one of the claims challenged in the request, the determination will include an order for *inter partes* reexamination of the patent for resolution of the question of whether the requester will prevail.

III. The Legal Standard for Ordering Reexamination

A review of 35 USC 311-317 and 37 CFR 1.915, 1.919, and 1.923, after implementation of the Leahy-Smith America Invents Act[2], shows that *inter partes* reexamination of a United States Patent is only authorized when a consideration of prior art consisting of patents or printed publications establishes that there is a reasonable likelihood that the requester will prevail with respect to at least one of the claims challenged in the request. In particular, 35 USC 311(a) requires that a request for *inter partes* reexamination be based upon prior art as set forth in 35 USC 301, that is, prior art consisting of patents or printed publications, while 37 CFR 1.915(b)(3) requires that a request for *inter partes* reexamination include "a statement ... showing that there is a reasonable likelihood that the requester will prevail with respect to at least one of the claims challenged in the request."

Section 6(c)(3)(A) of the Leahy-Smith America Invents Act amended 35 USC 312 and 313 to delete any reference to the SNQ standard, and provide, in place of each deletion, language requiring the information presented in a request for *inter partes* reexamination (filed pursuant to 35 USC 311) to show that there is a reasonable likelihood that the requester will prevail with respect to at least one of the claims challenged in the request. With respect to the reasonable likelihood standard, House Rep. 112–98 (Part 1), 112th Cong., 1st Sess., provides, in connection with *inter partes* review, the following:

> "The threshold for initiating an inter partes review is elevated from 'significant new question of patentability'—a standard that currently allows 95% of all requests to be granted—to a standard requiring petitioners to present information showing that their challenge has a reasonable likelihood of success." H.R. Rep. No. 112–98 (Part 1), at 47.

Similarly, with respect to the reasonable likelihood standard, a Senate debate in the Congressional Record at S1375 (March 8, 2011), 112th Cong., 1st Sess., provides, in connection with *inter partes* review, the following:

> "Among the most important protections for patent owners added by the present bill are its elevated thresholds for instituting inter partes and post-grant reviews. The present bill dispenses with the test of "substantial new question of patentability," a standard that currently allows 95% of all requests to be granted. It instead imposes thresholds that require petitioners to present information that creates serious doubts about the patent's validity. ...

[2] Public Law 112-29, 125 Stat. 284 (2011).

> ...The "reasonable likelihood" test is currently used in evaluating whether a party is entitled to a preliminary injunction, and effectively requires the petitioner to present a prima facie case justifying a rejection of the claims in the patent."

To implement this change to the standard of granting an *inter partes* reexamination request, the Office revised the rules of practice for *inter partes* reexamination by amending 37 CFR 1.915, 1.923, 1.927, and 1.931 to delete any reference to the SNQ standard for granting reexamination, and insert in its place reference to the newly enacted "reasonable likelihood" standard. See "Revision of Standard for Granting an Inter Partes Reexamination Request: Final Rule," 76 Fed. Reg. 59055 (Sept. 23, 2011). The relevant regulations, as amended, appear in subsection II.

IV. Analysis of the Request for Reexamination of the '400 patent

The Request in the instant proceeding sets forth the following proposed rejections:

1. Claims 1-53 are rendered obvious by the combined teachings of Alexander and Genest.

2. Claims 1-53 are rendered obvious by the combined teachings of Alexander and Chamberlain.

3. Claims 1-53 are rendered obvious by the combined teachings of Alexander and Speck.

4. Claims 1-53 are rendered obvious by the combined teachings of Speck and Alexander.

The request was granted in the December 13, 2011 order granting the request for *Inter Partes* Reexamination as to claims 1-8 and 26-39 but denied as to claims 9-25 and 40-53[3].

The petition raised two issues regarding claims 9-16, 18-25 and 40-53, as indicated above, instead of framing issues on the basis of the proposed rejections. Therefore, this decision will follow the format established by the petition to address the two issues raised by the petition, and will only address the proposed rejections discussed in the petition in detail.

Section 6(c)(3)(A) of the Leahy-Smith America Invents Act provides a provision under which a request for *inter partes* reexamination will not be granted unless the information presented in the request shows that there is a reasonable likelihood that the requester will prevail with respect to at least one of the claims challenged in the request.

In order to show a reasonable likelihood of prevailing, the request, in view of the prior art, must set forth a proposed ground of rejection for a claim(s) that addresses each and every limitation set forth in the claim(s).

---

[3] Claim 17 will not be further discussed for the reasons set forth in fn. 1. It should also be noted that the order sets forth additional reasons for not granting the request with respect to claim 9-15 at pages 7-8 and 12-13. Specifically, the examiner found that the proposed combinations of Alexander and Chamberlain, Alexander and Speck and Speck and Alexander do not present an RLP showing. However, petitioner has not raised arguments with respect to any of these proposed combinations. Accordingly, these combinations will not be addressed or discussed.

First Issue – Claims 9-15, 21-25 and 40-44

The examiner found that the request failed to make a showing of a reasonable likelihood of prevailing (RLP) for claims 9-15, 21-25 and 40-44 because Alexander did not disclose the first planar element 202 as having a raised edge "for covering a section of *all sides* of the display portion"; that raised edges 286, 288 and 290 cover only three of the four sides of the display panel 280. Order at pages 6-7. The examiner additionally found that Genest does not cure this deficiency. Order at pages 6-7. The examiner also found that since claims 10-15, 22-25 and 40-44 depend from claims 9 and 21, the request failed to make an RLP showing for claims 10-15 and 40-44 for the same reasons as discussed with respect to claims 9 and 21. Order at pages 6-7.

In response to the examiner's findings, petitioner argues that, with respect to claims 9 and 21, the claimed feature allegedly lacking in the teachings of Alexander and Genest – a planar element having a raised edge for covering a section of all sides of the display portion – is nothing more than an arrangement of old elements with each performing the same function it had been known to perform and thus, yields no more than one would expect from such an arrangement. Petition at page 7. Petitioner argues that Alexander teaches a raised edge for covering at least three sides of the display portion and that adding a fourth wall would do no more than yield predictable results as it would define a recess to receive and protect a laptop computer's display portion (a function described in Alexander). Petition at page 7. Petitioner also argues that Alexander suggests doing so in the disclosure with respect to the lower case body 220 that includes four walls. Petition at pages 7-8. Petitioner thus argues that going from seven sides to eight sides is not such an inventive leap as to deserve a patentable claim. Petition at page 8. Petitioner adds that prior art of record from the original prosecution, such as Song, U.S. Patent No. 5,682,993, shows using a raised edge to cover a section of all sides of a display portion. Petition at page 8.

A review of the record finds that the examiner correctly determined that Alexander in combination with Genest does not present an RLP showing for claims 9-15, 21-25 and 40-44. Petitioner's argument that a planar element having four raised edges for covering a section of all sides of the display portion is nothing more than an arrangement of old elements is misplaced. Although the request specifically set forth proposed rejections for claims 9-15, 21-25 and 40-44 for Alexander in view of Genest, a review of the request reveals that petitioner did not propose Genest as teaching the planar element having four raised edges for covering a section of all sides of the display portion. Genest was set forth by petitioner to teach the plurality of tabs also recited in claim 9. See, e.g., request at page 22. To the contrary, the request indicates that petitioner considered Alexander to supply this teaching. See, e.g., pages 22 and 63 of the request. Then, in the petition, petitioner does not quibble with the examiner's determination that Alexander only teaches three raised edges. Petition at pages 2, 5 and 7. Petitioner also does not even attempt to argue that Genest teaches the four raised edges. Instead, petitioner attempts to insert a different argument regarding the application of Alexander, namely, that Alexander implies the four raised edges or, at the very least, the previously-applied prior art teaches it. Petition at pages 7-8.

Petitioner cannot now, on petition, present a new argument regarding the application of Alexander to claims 9-15, 21-25 and 40-44 and state that the examiner erred in making such an application. Petitioner cannot introduce new evidence to establish that the examiner erred in the determination, e.g., effectively bootstrap new arguments into being "new evidence" to establish a

reasonable likelihood of prevailing in the request for reexamination in the '767 proceeding. The requirement that the *request* must present a reasonable likelihood of prevailing (RLP) on at least one claim places the initial burden of proof on the requester to present a complete explanation in the request. The CRU Director's *de novo* review is based upon the record at the time the examiner made the determination. The examiner properly considered the proposed rejection provided in the request: Alexander in view of Genest. The RLP analysis in the determination is consistent with the proposed rejections as framed in the request. The examiner correctly found that Alexander did not teach the four raised edges and that Genest did not cure this deficiency, as it did not teach this feature either. Therefore, upon review of the record, petitioner's arguments are not persuasive.

Second Issue – Claims 16, 18-20 and 45-53

The examiner found that the request failed to make a showing of a reasonable likelihood of prevailing (RLP) for claims 16, 18-20 and 45-53 because Alexander did not disclose tabs. Order at page 7. The examiner additionally found that Genest does not teach a "plurality of protruding tabs located on *opposing sides*" as recited in the claims, and with respect to both the first and second rectangular sheets. Order at page 7. The examiner also found that since claims 18-20 and 45-53 depend from claim 16, the request failed to make an RLP showing for claims 18-20 and 45-53 for the same reasons as discussed with respect to claim 16. Order at page 7.

In response to the examiner's findings, petitioner argues that, with respect to claim 16, the claimed feature allegedly lacking in the teachings of Alexander and Genest – a second rectangular sheet including a plurality of protruding tabs located on opposing sides of the second rectangular sheet – is nothing more than an arrangement of old elements with each performing the same function it had been known to perform and thus, yields no more than one would expect from such an arrangement. Petition at page 9. Petitioner argues that Alexander teaches a set of release ports 296 formed at each of the display cover's sidewalls 288 and 290 aligned with the release mechanism buttons or slides 292. Petition at page 9. Petitioner thus argues that similar to the tabs in Genest, the ports' function is to engage with the buttons or slides 292 to hold or grip the display portion of a laptop and they are located on opposing sides of the display cover's sidewalls. Petition at page 9. Petitioner then argues that it would be obvious to modify Alexander's display cover to include Genest's tabs on opposing sides of the cover so that the cover can be easily mounted on the laptop's display portion. Petition at page 9.

A review of the record finds that the examiner correctly determined that Alexander in combination with Genest does not present an RLP showing for claims 16, 18-20 and 45-53. Petitioner's argument that placing a plurality of tabs on opposing sides of a laptop cover is nothing more than an arrangement of old elements is misplaced. Although the request specifically set forth proposed rejections for claims 16, 18-20 and 45-53 for Alexander in view of Genest, a review of the request reveals that petitioner did not propose Genest as teaching the tabs located on *opposing sides* of a laptop cover. Genest was indeed set forth by petitioner to teach the plurality of tabs. See, e.g, request at page 24. However, the request does not indicate that petitioner considered Genest to teach the feature of the tabs being on *opposing sides*. See, e.g., request at pages 24 and 68. In fact, the request does not specifically address the feature of the tabs being on opposing sides. Petitioner also does not even attempt to argue that Genest teaches

the tabs on *opposing sides*. Instead, petitioner attempts to insert a different argument regarding the application of Alexander, namely, that Alexander teaches a set of release ports 296 that are located on opposing sides of the display cover's sidewalls that could be essentially replaced by the tabs of Genest. Petition at page 9.

As with the first issue above, petitioner cannot now, on petition, present a new argument regarding the application of Alexander to claims 16, 18-20 and 45-53 and state that the examiner erred in making such an application. Petitioner cannot introduce new evidence to establish that the examiner erred in the determination, e.g., effectively bootstrap new arguments into being "new evidence" to establish a reasonable likelihood of prevailing in the request for reexamination in the '767 proceeding. The requirement that the *request* must present a reasonable likelihood of prevailing (RLP) on at least one claim places the initial burden of proof on the requester to present a complete explanation in the request. The CRU Director's *de novo* review is based upon the record at the time the examiner made the determination. The examiner properly considered the proposed rejection provided in the request: Alexander in view of Genest. The RLP analysis in the determination is consistent with the proposed rejections as framed in the request. The examiner correctly found that Alexander did not teach the tabs and that Genest did not teach tabs on opposing sides. Therefore, upon review of the record, petitioner's arguments are not persuasive.

The *de novo* review on the record of the request for reexamination in the '767 reexamination proceeding, undertaken in light of the arguments presented in the petition supports the conclusion that the request for reexamination did not establish that there is a reasonable likelihood that the requester will prevail with respect to claims 9-16, 18-25 and 40-53 in the '400 patent. Accordingly, the petition is denied.

CONCLUSION

1. Based on a *de novo* review of the record as a whole, the PETITION is DENIED.

2. This decision is final and nonappealable. 37 CFR 1.927. No further communication on this matter will be acknowledged or considered.

3. Telephone inquiries related to this decision should be directed to Andres Kashnikow, Supervisory Patent Examiner, at (571) 272-4361.

Irem Yucel
Director
Central Reexamination Unit

UNITED STATES PATENT AND TRADEMARK OFFICE

Commissioner for Patents
United States Patent and Trademark Office
P.O. Box 1450
Alexandria, VA 22313-1450
www.uspto.gov

Christopher & Weisberg, P.A.
200 East Las Olas Boulevard
Suite 2040
Fort Lauderdale, FL 33301

(FOR PATENT OWNER)

MAILED

NOV 15 2011

CENTRAL REEXAMINATION UNIT

Arnold & Porter LLP
Attn: IP Docketing Dept.
555 Twelfth Street, NW
Washington, D.C. 20004-1206

(FOR THIRD PARTY REQUESTER)

In re Addonizio et al.
Reexamination Proceeding
Control No. : 95/001,768
Filed: October 4, 2011
Patent No. 7,967,852

: **DECISION**
: **ON**
: **PETITION**
: **UNDER**
: **37 CFR 1.181**

This is a decision on the Third Party Requester's petition filed September 20, 2011 under 37 CFR 1.182 to request permission to use color for the document entitled "Request for *Inter Partes* Reexamination", which includes color illustrations.

The petition is before the Group Director overseeing the Central Reexamination Unit.

SUMMARY

Third Party Requester's petition is DISMISSED as moot for the reasons set forth below, without consideration of the merits.

BRIEF STATEMENT OF RELEVANT FACTS

1. U.S. Patent No. 7,967,852 (the '852 patent) issued on June 28, 2011.

2. A request for *inter partes* reexamination, assigned Control No. 95/001,768 (the '768 proceeding), was filed by a third party requester on September 20, 2011. Filed concurrently with this request was the instant petition

3. A Notice of Incomplete *Inter Partes* Reexamination Request was mailed on September 28, 2011.

4. A corrected Request for *Inter Partes* Reexamination was filed on October 4, 2011.

DECISION

The instant petition, requests permission to use color for the document entitled "Request for *Inter Partes* Reexamination", which includes color illustrations. The petition indicates that the request referred to is the request filed concurrently with the petition on September 20, 2011. However, requester filed a corrected request for *inter partes* reexamination of October 4, 2011. This corrected request was not accompanied by a petition requesting permission to use color illustrations. In addition, it is not clear from the petition that it pertains to the corrected request filed October 4, 2011, nor was any clarification give in the corrected request. Accordingly, the instant petition is hereby dismissed as moot.

CONCLUSION

1. Patent Owner's petition under 37 CFR 1.182, filed September 20, 2011, is **dismissed** as moot for the reasons discussed above.

2. The present *inter partes* reexamination proceeding is being forwarded to the examiner for prosecution in due course.

3. Telephone inquiries related to this decision should be directed to Andres Kashnikow, Supervisory Patent Examiner, at (571) 272-4361.

Irem Yucel
Group Director, Technology Center 1600

UNITED STATES PATENT AND TRADEMARK OFFICE

Commissioner for Patents
United States Patent and Trademark Office
P.O. Box 1450
Alexandria, VA 22313-1450
www.uspto.gov

ROLF FASTH
FASTH LAW OFFICES
26 PINECREST PLAZA, SUITE 2
SOUTHERN PINES, NC 28387-4301

(For Patent Owner)

MAILED

MAR 08 2012

CENTRAL REEXAMINATION UNIT

JEFFRY H.NELSON
NIXON & VANDERHYE, P.C.
901 NORTH GLEBE ROAD 11th FLOOR
ARLINGTON, VA 22203

(For Third Party Requester)

In re Hoglund
Inter Partes Reexamination Proceeding
Control No. 95/001,771
Filed: November 4, 2011
For: U.S. Patent No. 7,350,674

: DECISION ON
: PETITION UNDER
: 37 CFR 1.181 &
: 1.927

Third party requester filed a paper on January 23, 2012, entitled "Petition to Review Refusal to Order Inter Partes Reexamination" (hereinafter "the petition"). The petition is before the Director of the Central Reexamination Unit (CRU). Petitioner, the reexamination requester, seeks supervisory review of the Order, which was mailed on December 21, 2011.

The petition is **dismissed as moot** for the reasons set forth below.

REVIEW OF RELEVANT FACTS

1. U.S. Patent No. 7,350,674 ("the '674 patent") issued on April 1, 2008.

2. On November 4, 2011, a corrected request for *inter partes* reexamination was filed for claims 1-7 of the '674 patent. The reexamination proceeding was assigned Control No. 95/001,771 (hereinafter, the '771 proceeding).

3. On December 21, 2011, a determination ordering reexamination for claim 1 of the '674 patent and denying the request for reexamination for claims 2-7 of the '674 patent was mailed in the '771 proceeding. An Office action, which contained rejections of patent claim 1, was mailed on the same day.

4. On January 17, 2012, the patent owner responded to the Office action. The response included an amendment of patent claims 1-5 that did not comply with reexamination laws and procedures.

5. On January 18, 2012, the Office mailed a "Notice of Defective Paper In *Ex Parte* Reexamination," which gave the patent owner one month to filed a compliant amendment.

6. On January 23, 2012, the instant petition was filed. The petition requests review of the examiner's determination to deny reexamination for patent claims 2 and 3 based upon three proposed rejections.

7. On January 25, 2012, the patent owner filed a corrected amendment, which cancelled patent claim 2 and amended patent claims 1 and 3-5.

8. On February 24, 2012, the third party requester filed comments on the patent owner's response and the Office action. The comments included proposed rejections for newly amended claims 1 and 3.

Petitioner's Grounds in Support of the Requested Relief

Petitioner alleges that the examiner's denial of reexamination for patent claims 2 and 3 is improper because the determination incorrectly found that the request did not establish a reasonable likelihood of prevailing for claims 2 and 3 based upon the following three proposed rejections:

1. European Patent Document EP 0732280-A1 ("EP '280") in view of the Bauer Rotary Valve Brochure and the 1999 Users' Meeting Power Point Presentation, and further in view of Great Britain Patent Document GB 503 710 ("GB '710").

2. EP '280 in view of Swedish Patent Document C503684 ("SE '684"), and further in view of GB '710.

3. SE '684 in view of the Bauer Rotary Valve Brochure and the 1999 Users' Meeting, and further in view of GB '710.

See, e.g., page 2 of the petition.

DECISION

I. Relevant Regulations and Procedures for *Inter Partes* Reexamination

37 C.F.R. § 1.915(b) states in part:

> (3) A statement pointing out, based on the cited patents and printed publications, each showing of a reasonable likelihood that the requester will prevail with respect to at least one of the claims challenged in the request, and a detailed explanation of the pertinency and manner of applying the patents and printed publications to every claim for which reexamination is requested.

37 C.F.R. § 1.923 states:

> Within three months following the filing date of a request for *inter partes* reexamination under § 1.915, the examiner will consider the request and determine whether or not the request and the prior art establish a reasonable likelihood that the requester will prevail with respect to at least one of the claims challenged in the request. The examiner's determination will be based on the claims in effect at the time of the determination, will become a part of the official file of the patent, and will be mailed to the patent owner at the address as provided for in § 1.33(c) and to the third party requester. If the examiner determines that the request has not established a reasonable likelihood that the requester will prevail with respect to at least one of the challenged claims, the examiner shall refuse the request and shall not order *inter partes* reexamination.

37 C.F.R. § 1.927 states:

> The third party requester may seek review by a petition to the Director under § 1.181 within one month of the mailing date of the examiner's determination refusing to order *inter partes* reexamination. Any such petition must comply with § 1.181(b). If no petition is timely filed or if the decision on petition affirms that a reasonable likelihood that the requester will prevail with respect to at least one of the claims challenged in the request has not been established, the determination shall be final and nonappealable.

37 C.F.R. § 1.931(a) states:

> If it is found that there is a reasonable likelihood that the requester will prevail with respect to at least one of the claims challenged in the request, the determination will

include an order for *inter partes* reexamination of the patent for resolution of the question of whether the requester will prevail.

37 C.F.R. § 1.948(a) states:

(a) After the *inter partes* reexamination order, the third party requester may only cite additional prior art as defined under § 1.501 if it is filed as part of a comments submission under § 1.947 or § 1.951(b) and is limited to prior art:

(1) which is necessary to rebut a finding of fact by the examiner;

(2) which is necessary to rebut a response of the patent owner; or

(3) which for the first time became known or available to the third party requester after the filing of the request for *inter partes* reexamination proceeding. Prior art submitted under paragraph (a)(3) of this section must be accompanied by a statement as to when the prior art first became known or available to the third party requester and must include a discussion of the pertinency of each reference to the patentability of at least one claim.

MPEP 2666.05 states, in part:

II. CONTENT

The third party requester comments must be directed to points and issues covered by the Office action and/or the patent owner's response. The written comments filed by a third party requester should specify the issues and points in the Office action or the patent owner's response to which each comment is directed. Thus, the third party requester should (1) set forth the point or issue, (2) state the page of the Office action and/or the patent owner response where the point or issue is recited, and (3) then present the third party requester's discussion and argument as to the point or issue. If this is not done by the third party requester, the comments should not be held defective if the examiner can ascertain that all of the comments filed by the third party requester are directed to the issues and points in the Office action and/or the patent owner's response.

Third party requester comments are limited to issues covered by the Office action or the patent owner's response. New prior art can be submitted with the comments **only** where the prior art (A) is necessary to rebut a finding of fact by the examiner, (B) is necessary to rebut a response of the patent owner, or (C) for the first time became known or available to the third party requester after the filing of the request for *inter partes* reexamination.

...

As to item (B) above, 37 CFR 1.948(a)(2) permits the requester to provide a new proposed rejection, where such new proposed rejection is necessitated by patent owner's amendment of the claims.

...

> As to items (A) - (C) above where a newly proposed rejection is based on the newly presented prior patents and printed publications (art), the third party requester must present the newly proposed rejection in compliance with the guidelines set forth in MPEP § 2617, since any such new proposed rejection stands on the same footing as a proposed rejection presented with the request for reexamination, and is treated the same way as to future Office actions and any appeal. See MPEP § 2617 as to the required discussion of the pertinency of each reference to the patentability of at least one claim presented for the newly submitted prior art. An explanation pursuant to the requirements of 35 U.S.C. 311 of how the art is applied is no less important at this stage of the prosecution, than it is when filing the request.

II. Discussion

As stated above, the petition requests review of the determination to deny reexamination for claims 2 and 3 of the '674 patent in regard to three proposed rejections. The petition did not request review of the determination to deny reexamination for patent claims 4-7 and did not request review for other proposed rejections raised in the request.

35 USC 312(c) and 37 CFR 1.927 provide for the filing of a petition to review an examiner's determination refusing to order *inter partes* reexamination. The CRU Director's review on petition is *de novo*. The review will not necessarily consider evidence not of record at the time of the request for reexamination (e.g., evidence made of record for the first time in the petition) or address issues not raised by the petition. In summary, the *de novo* review is limited to the determination to deny reexamination for claims 2 and 3 of the '674 patent in regard to three above-mentioned proposed rejections.

As pointed out, the patent owner filed an amendment to claims 1-5 of the '674 patent on January 25, 2012. Patent owner, by the amendment, has voluntarily brought claims 1 and 3-5 into the reexamination proceeding. Specifically, ***any*** amendment to a claim not involved in the reexamination proceeding will bring that claim into the reexamination proceeding. See 37 CFR 1.104. There is no requirement to rewrite a dependent claim in independent format if it depends from a cancelled patent claim. See MPEP 2660.03. In fact, amending claim 1 to include the subject matter of claim 2 and amending claim 3 brought claim 3 and the subject matter of claim 2 into the reexamination proceeding even though the order determined that dependent claims 2 and 3 were not subject to reexamination. For this reason, there is no need to determine whether or not a reasonable likelihood to prevail was raised by the request for patent claims 2 and 3 in order to confer jurisdiction to reexamine these claims under 35 USC 312(a). As stated above, the Office has jurisdiction to examine the claims 1-5 in this reexamination proceeding due to the amendment of January 25, 2012.

On February 24, 2012, as discussed above, the third party requester filed comments, which included new proposed rejections, in response to patent owner's proposed

amendments to claims 1-3 of the '674 patent. The comments are permitted to raise new proposed rejections under 37 CFR 1.948(a)(2). In other words, reexamination laws and procedures allow the requester to submit new proposed rejections that are necessitated by the proposed amendments submitted by the patent owner. See MPEP 2666.05. In addition, the new proposed rejections in the comments are identical to the proposed rejections for which review was requested in the petition. Therefore, the examiner will consider these new proposed rejections in preparing the next Office action.

As a result of the January 25, 2012 amendment and February 24, 2012 comments, the remedy requested in the petition, e.g., reexamination of claims 1-3 based upon the three above-identified proposed rejections, will be given in the next Office action. In other words, the ultimate relief requested by the petition will effectively be granted due to consideration of the January 25, 2012 amendment and February 24, 2012 comments in accordance with reexamination laws and procedures.

For these reasons, the petition is moot, and hereby, dismissed.

CONCLUSION

1. Based on a review of the record, the PETITION is DISMISSED as moot.

2. The examiner will consider the three above-identified proposed rejections raised in the requester's comments of February 24, 2012, and the patent owner's January 25, 2012 response and amendment in the next Office action in due course.

3. This decision is final and nonappealable. 37 CFR 1.927. No further communication on this matter will be acknowledged or considered.

4. Telephone inquiries related to this decision should be directed to Andres Kashnikow, Supervisory Patent Examiner, at (571) 272-4361.

Irem Yucel
Director
Central Reexamination Unit

UNITED STATES PATENT AND TRADEMARK OFFICE

UNITED STATES DEPARTMENT OF COMMERCE
United States Patent and Trademark Office
Address: COMMISSIONER FOR PATENTS
P.O. Box 1450
Alexandria, Virginia 22313-1450
www.uspto.gov

APPLICATION NO.	FILING DATE	FIRST NAMED INVENTOR	ATTORNEY DOCKET NO.	CONFIRMATION NO.
95/001,772	09/30/2011	6,571,334	19027.RX334	4241

24201 7590 01/26/2012

FULWIDER PATTON LLP
HOWARD HUGHES CENTER
6060 CENTER DRIVE, TENTH FLOOR
LOS ANGELES, CA 90045

EXAMINER	
ART UNIT	PAPER NUMBER

DATE MAILED: 01/26/2012

Please find below and/or attached an Office communication concerning this application or proceeding.

UNITED STATES PATENT AND TRADEMARK OFFICE

Commissioner for Patents
United States Patent and Trademark Office
P.O. Box 1450
Alexandria, VA 22313-1450
www.uspto.gov

DO NOT USE IN PALM PRINTER

(THIRD PARTY REQUESTER'S CORRESPONDENCE ADDRESS)

NOVAK DRUCE + QUIGG LLP

1000 Louisiana Street

Fifty-Third Floor

Houston, TX 77002

Transmittal of Communication to Third Party Requester
Inter Partes Reexamination

REEXAMINATION CONTROL NUMBER *95/001,772*.

PATENT NUMBER *6,571,334*.

TECHNOLOGY CENTER *CRU*.

ART UNIT *3992*.

Enclosed is a copy of the latest communication from the United States Patent and Trademark Office in the above-identified reexamination proceeding. 37 CFR 1.903.

Prior to the filing of a Notice of Appeal, each time the patent owner responds to this communication, the third party requester of the *inter partes* reexamination may once file written comments within a period of 30 days from the date of service of the patent owner's response. This 30-day time period is statutory (35 U.S.C. 314(b)(2)), and, as such, it cannot be extended. See also 37 CFR 1.947.

If an *ex parte* reexamination has been merged with the *inter partes* reexamination, no responsive submission by any *ex parte* third party requester is permitted.

All correspondence relating to this inter partes reexamination proceeding should be directed to the **Central Reexamination Unit** at the mail, FAX, or hand-carry addresses given at the end of the communication enclosed with this transmittal.

Decision on Petition for Extension of Time in Reexamination	Control No.: 95/001,772

1. THIS IS A DECISION ON THE PETITION FILED: 20 January 2012.

2. THIS DECISION IS ISSUED PURSUANT TO:
   A. ☐ 37 CFR 1.550(c) – The time for taking any action by a patent owner in an *ex parte* reexamination proceeding will be extended only for sufficient cause and for a reasonable time specified.
   B. ☒ 37 CFR 1.956 – The time for taking any action by a patent owner in an *inter partes* reexamination proceeding will be extended only for sufficient cause and for a reasonable time specified.
   The petition is before the Central Reexamination Unit for consideration.

3. FORMAL MATTERS
   Patent owner requests that the period for responding to the Notice of Appeal dated 10 December 2011 which sets a two (2) month period for filing a response to the Office action, be extended by two (2) months.

   A. ☒ Petition fee per 37 CFR §1.17(g)):
      i. ☐ Petition includes authorization to debit a deposit account.
      ii. ☐ Petition includes authorization to charge a credit card account.
      iii. ☐ Other: _____.
   B. ☒ Proper certificate of service was provided. (Not required in reexamination where patent owner is requester.)
   C. ☒ Petition was timely filed.
   D. ☒ Petition properly signed.

4. DECISION (See MPEP 2265 and 2665)
   A. ☐ Granted or ☒ Granted-in-part for one (1) month because petitioner provided a factual accounting that established sufficient cause. (See 37 CFR 1.550(c) and 37 CFR 1.956).
   B. ☒ Other/comment: see attached
   C. ☐ Dismissed because:
      i. ☐ Formal matters (See unchecked box(es) (A, B, C and/or D) in section 4 above).
      ii. ☐ Petitioner failed to provide a factual accounting of reasonably diligent behavior by all those responsible for preparing a response to the outstanding Office action within the statutory time period.
      iii. ☐ Petitioner failed to explain why, in spite of the action taken thus far, the requested additional time is needed.
      iv. ☐ The statements provided fail to establish sufficient cause to warrant extension of the time for taking action (See attached).
      v. ☐ The petition is moot.
      vi. ☒ Other/comment: see attachment.

5. CONCLUSION

   Telephone inquiries with regard to this decision should be directed to Mark Reinhart at 571-272-1611. In his/her absence, calls may be directed to Eric Keasel at 571-272-4929 in the Central Reexamination Unit.

/Mark Reinhart/	SPE, AU 3992 Central Reexamination Unit
[*Signature*]	(Title)

In consideration of providing the patent owner with a fair opportunity to present an argument against any attack on the patent as balanced with the statutory mandate of conducting reexamination proceedings with "special dispatch" the Office must fully consider the facts presented in any petition for extension of time. The petition speaks to the considerations of other concurrent proceedings before counsel, the extensive length and complexity of the Office action, and the need for an interview.

The requirement for reasonably diligent behavior by the patent owner includes a reasonable expectation of resource management. Resource management takes into consideration the time other concurrent proceedings before counsel. As such, the Office does not consider concurrent proceedings as "sufficient cause" for the purpose of extensions of time in reexamination proceedings

Further, absent unavailability of the examiner or something outside the normal business practice that could not have been anticipated by counsel, interviews are generally not considered as "sufficient cause" for the purpose of granting an extension of time.

Pursuant to MPEP § 2665 (in part) Extension of Time (in-part)

> "First requests for extensions of these time periods will be granted for sufficient cause, and for a reasonable time specified-usually 1 month. The reasons stated in the request will be evaluated, and the request will be favorably considered where there is a factual accounting of reasonably diligent behavior by all those responsible for preparing a response or comments within the statutory time period. Second or subsequent requests for extensions of time, or requests for more than one month, will be granted only in extraordinary situations." (emphasis added)

On balance there is "sufficient cause" to grant-in-part the extension of time for one (1) month. When balanced between the need for "special dispatch" and the opportunity for a patent owner to fully respond to the issues outstanding the breadth and complexity of the Office actions does support "sufficient cause" for granting-in-part the petition for extension of time.

The petition for extension of time is hereby granted-in-part for one (1) month.

UNITED STATES PATENT AND TRADEMARK OFFICE

COMMISSIONER FOR PATENTS
UNITED STATES PATENT AND TRADEMARK OFFICE
P.O. BOX 1450
ALEXANDRIA, VA 22313-1450
www.uspto.gov

NIELDS, LEMACK & FRAME, LLC
176 E. MAIN STREET
SUITE #5
WESTBOROUGH, MA 01581

(For Patent Owner)

MAILED

APR 0 4 2012

CENTRAL REEXAMINATION UNIT

Peter K. Sollins
FOLEY HOAG, LLP, PATENT GROUP
155 SEAPORT BLVD.
WORLD TRADE CENTER WEST
BOSTON, MA 02110

(For Third-Party Requester)

In re Flaherty et al.
Reexamination Proceeding
Control No. 95/001,775
Request Deposited: October 4, 2011
For: U.S. Patent No. 8,028,491

: DECISION ON
: PETITION TO VACATE ORDER
: GRANTING *INTER PARTES*
: REEXAMINATION
: AS ULTRA VIRES

This is a decision on the patent owner petition under 37 CFR 1.181(a)(3) filed on February 16, 2012 by which Patent Owner requests the Order Granting the Request for reexamination of claims 1-13 of US Patent No 8,028,491 be vacated as an *ultra vires* act and on requester's opposition petition thereto filed February 27, 2012. The petitions are before the Director of the Central Reexamination Unit for decision.

The patent owner petition is **DISMISSED** for the reasons set forth below.

The requester's opposition petition is **GRANTED** to the extent that patent owner's petition is dismissed.

REVIEW OF RELEVANT FACTS

1. On October 4, 2011, a request for *inter partes* reexamination of all of the claims (claims 1-13) of U.S. Patent No 8,028,491 to Flaherty et al. was filed by a third party requester. The real party of interest was identified as ADA Solutions, Inc. The request was assigned Control no. 95/001,775 ("the '775 proceeding").

2. On December 16, 2011, the Office issued an order granting the '775 request for *inter partes* reexamination of claims 1-13. The Office also issued a first Office action on the merits on the same day.

3. On February 16, 2012, patent owner submitted a response to the first Office action of December 16, 2011. On the same day, patent owner also filed a petition entitled "PETITION TO THE DIRECTOR UNDER 37 C.F.R. § 1.181 TO VACATE THE PENDING INTER PARTES REEXAMINATION," the subject of this instant decision.

4. On February 27, 2012, third party requester filed an opposition to the patent owner's petition (of February 16, 2012) to vacate the order granting reexamination.

APPLICABLE STATUE(S) AND RULE(S)

35 U.S.C. § 312 provides

> (a) REEXAMINATION. – Not later than 3 months after the filing of a request for inter parted reexamination under section 311, the Director shall determine whether the information presented in the request shows that there is a reasonable likelihood that the requester would prevail with respect to at least 1 of the claims challenged in the request, with or without consideration of other patents or printed publications. A showing that there is a reasonable likelihood that the requester would prevail with respect to at least 1 of the claims challenged in the request is not precluded by the fact that a patent or printed publication was previously cited by or to the Office or considered by the Office. (Emphasis added.)

35 U.S.C. § 313 provides

> If, in a determination made under section 312(a), the Director finds that it has been shown that there is a reasonable likelihood that the requester would prevail with respect to at least 1 of the claims challenged in the request, the determination shall include an order for inter partes reexamination of the patent for resolution of the question. The order may be accompanied by the initial action of the Patent and Trademark Office on the merits of the inter partes reexamination conducted in accordance with section 314.

37 C.F.R. § 1.915(b)(3) provides

> A statement pointing out, based on the cited patents and printed publications, each showing of a reasonable likelihood that the requester will prevail with respect to at least one of the claims challenged in the request, and a detailed explanation of the pertinency and manner of applying the patents and printed publications to every claim for which reexamination is requested.

37 C.F.R. § 1.923 provides

> Within three months following the filing date of a request for *inter partes* reexamination under 1.915, the examiner will consider the request and determine whether or not the request and the prior art establish a reasonable likelihood that the requester will prevail with respect to at least one of the claims challenged in the request. The examiner's determination will be based on the claims in effect at the time of the determinations, will become a part of the official file of the patent, and will be mailed to the patent owner at the address as provided in 1.33(c) and to the third party requester. If the examiner determines that the request has not established a reasonable likelihood that the requester will prevail with respect to at least one of the challenged claims, the examiner shall refuse the request and shall not order *inter partes* reexamination.

37 C.F.R. § 1.931 provides

> (a) If it is found that there is a reasonable likelihood that the requester will prevail with respect to at least one of the claims challenged in the request, the determination will include an order for inter partes reexamination of the patent for resolution of the question of whether the requester will prevail.

DECISION

Patent owner petitions under 37 C.F.R § 1.181(a)(3) to vacate the order granting reexamination mailed on December 16, 201 as an *ultra vires* act. Petitioner asserts that the Office does not have jurisdiction to initiate or continue this reexamination because, according to patent owner, the rejections proposed by the request for reexamination rely on the same teachings which were considered in the original prosecution.

Patent owner relies on 35 U.S.C. § 302 to support the assertion that the order granting reexamination is an *ultra vires* act. However, the requirements of 35 U.S.C. § 302 is limited to *ex parte* reexamination and does not apply to *inter partes* reexamination. For *inter partes* reexamination, the relevant statute is 35 U.S.C. § 312, which was recently amended, as reproduced above. For this reason, petitioner's arguments that the order is an *ultra vires* act because the request for *inter partes* reexamination fails to meet the requirements of 35 U.S.C. § 302 is not persuasive.

Patent owner also relies upon the policy set forth in MPEP § 2616, which discusses the requirement for the request to include "a statement pointing out each substantial question of patentability ..." under 37 C.F.R. § 1.915(b)(3) to support the argument that because there is no

new teachings presented in the request, the Office had no discretion to order the reexamination. Under the "substantial new question of patentability" (SNQ) standard, a request must present a question of patentability that is substantially different from those raised in the previous examination of the patent before the Office. Patent owner reasons that since the request was filed after the recent enactment of the America Invents Act of 2011 which "elevated" the threshold for determining whether there should be an order granting the request for reexamination from the SNQ standard to the "reasonable likelihood to prevail" (RLP) standard, the request should fail because it does not pass the SNQ threshold which is lower that the RLP threshold.

Patent owner's reliance on the SNQ standard is misplaced. As patent owner noted, for *inter partes* reexamination, the SNQ standard has been replaced with the RLP standard. The relevant rules of practice have been revised accordingly and are reproduced above. (See "Revision of Standard for Granting an Inter Partes Reexamination Request", 76 Fed. Reg. 185 September 23, 2011.) Whether the issue being brought forth for consideration has been addressed in a previous Office proceeding does not preclude reexamination under the current standard for ordering *inter partes* reexamination. See the second sentence of 35 U.S.C. 312(a) emphasized above. Under 35 U.S.C. § 312, the Office has the discretion to reconsider issues that have been addressed in the past, provided the estoppel provisions of 35 U.S.C. 317 do not apply. The determination of whether the questions presented in the request are new is no longer a prerequisite to the determination of whether to order *inter partes* reexamination.[1]

After a review of the present record, and based upon the above discussion, it is found that petitioner patent owner has not shown the Office to have "clearly exceeded its statutory authority" nor acted "in brazen defiance of its statutory authorization" in the Office's determination to order re-examination. See *Heinl v Godici*, (E.D.Va. 2001), 143 F. Supp. 2d 593. Accordingly, patent owner's petition does not demonstrate that the granting of *inter partes* reexamination was *ultra vires,* and therefore, the petition is dismissed.

CONCLUSION

1. Petitioner's request to vacate the reexamination is **dismissed.**

2. The requester's opposition petition is **granted** to the extent that patent owner's petition is dismissed.

3. Telephone inquiries related to this decision should be directed to Supervisory Patent Examiners, Andres Kashnikow, at (571) 272-4361, or Eileen Lillis, at (571) 272-6928.

Irem Yucel
Director, Central Reexamination Unit

[1] Accordingly, this decision does not address the arguments in requester's opposition that the issues raised are new because such determination is not relevant to deciding this petition.

UNITED STATES PATENT AND TRADEMARK OFFICE

UNITED STATES DEPARTMENT OF COMMERCE
United States Patent and Trademark Office
Address: COMMISSIONER FOR PATENTS
P.O. Box 1450
Alexandria, Virginia 22313-1450
www.uspto.gov

APPLICATION NO.	FILING DATE	FIRST NAMED INVENTOR	ATTORNEY DOCKET NO.	CONFIRMATION NO.
95/001,781 -95/001802	10/11/2011	7,804,426	DRIVP011REX	4257

21912 7590 04/19/2012

VAN PELT, YI & JAMES LLP
10050 N. FOOTHILL BLVD #200
CUPERTINO, CA 95014

EXAMINER	
ART UNIT	PAPER NUMBER

DATE MAILED: 04/19/2012

Please find below and/or attached an Office communication concerning this application or proceeding.

UNITED STATES PATENT AND TRADEMARK OFFICE

Commissioner for Patents
United States Patents and Trademark Office
P.O.Box 1450
Alexandria, VA 22313-1450
www.uspto.gov

DO NOT USE IN PALM PRINTER

THIRD PARTY REQUESTER'S CORRESPONDENCE ADDRESS

JONES DAY
222 EAST 41st. ST.
NEW YORK, NY 10017

Date: 4-19-12

Transmittal of Communication to Third Party Requester
Inter Partes Reexamination

REEXAMINATION CONTROL NO. : 95001781 + 95001802
PATENT NO. : 7804426
TECHNOLOGY CENTER : 3999
ART UNIT : 3992

Enclosed is a copy of the latest communication from the United States Patent and Trademark Office in the above identified Reexamination proceeding. 37 CFR 1.903.

Prior to the filing of a Notice of Appeal, each time the patent owner responds to this communication, the third party requester of the inter partes reexamination may once file written comments within a period of 30 days from the date of service of the patent owner's response. This 30-day time period is statutory (35 U.S.C. 314(b)(2)), and, as such, it cannot be extended. See also 37 CFR 1.947.

If an ex parte reexamination has been merged with the inter partes reexamination, no responsive submission by any ex parte third party requester is permitted.

All correspondence relating to this inter partes reexamination proceeding should be directed to the Central Reexamination Unit at the mail, FAX, or hand-carry addresses given at the end of the communication enclosed with this transmittal.

UNITED STATES PATENT AND TRADEMARK OFFICE

Commissioner for Patents
United States Patent and Trademark Office
P.O. Box 1450
Alexandria, VA 22313-1450
www.uspto.gov

MAILED

APR 19 2012

VAN PELT, YI & JAMES LLP (For Patent Owner)
10050 N. FOOTHILL BLVD #200
CUPERTINO CA 95014

CENTRAL REEXAMINATION UNIT

JONES DAY (For Third Party Requester)
222 EAST 41ST STREET
NEW YORK, NY 10017

In re Jamie Etcheson	:
Inter partes Reexamination	:
Control No. 95/001,781	: **DECISION**
Filed: October 11, 2011	: **SUA SPONTE**
For: U.S. Patent No. 7,804,426	: **TO MERGER**
	: ***INTER PARTES***
In re Jamie Etcheson	: **REEXAMINATION**
Control No. 95/001,802	: **PROCEEDINGS**
Filed: November 3, 2011	:
For: U.S. Patent No. 7,804,426	:

The above-captioned reexamination proceedings are before the Office of Patent Legal Administration for *sua sponte* consideration of whether the proceedings should be merged (consolidated) at this time.

BACKGROUND

1. On September 28, 2010 the Office issued U.S. Patent No. 7,804,426 (the '426 patent) to Jamie Etcheson with thirty-three claims.

2. On October 11, 2011, a third party requester filed a request for *inter partes* reexamination of all the claims of the '426 patent, assigned Control No. 95/001,781 (the '1781 proceeding). The request identified SmartDrive Systems, Inc. (hereinafter "the requester") as the real party in interest.

3. On November 3, 2011, the same third party requester filed a second request for *inter partes* reexamination, assigned Control No. 95/001,802 (the '1802 proceeding). The request identified SmartDrive Systems Inc. (hereinafter "the requester") as the real party in interest.

4. On December 13, 2011, *inter partes* reexamination of the '376 patent was granted on all the claims of the '426 patent in the '1781 proceeding. An Office action was concurrently issued.

5. On January 6, 2012, *inter partes* reexamination of the '376 patent was granted on all the claims of the '426 patent in the '1802 proceeding. An Office action was concurrently issued.

6. On February 13, 2012, patent owner timely filed a response in the '1781 proceeding to the December 13, 2011 Office action, retaining all the original claims as issued and adding new claims 34-85.

7. On March 6, 2012, patent owner timely filed a response in the '1802 proceeding to the January 6, 2012 Office action, retaining all the original claims as issued and adding new claims 34-85, identical to those claims in the co-pending '1781 proceeding.

8. On March 14, 2012, the third party requester timely filed comments in the '1781 proceeding.

9. On April 5, 2012, the third party requester timely filed comments in the '1802 proceeding.

DECISION

I. MERGER OF PROCEEDINGS

Reexamination is ordered in the two above-captioned proceedings for the same claims of the same patent. Both proceedings are *inter partes* reexamination proceedings. Both proceedings are still pending, and have not been terminated. Therefore, consideration of merger is ripe at this point in time.

37 CFR 1.989 provides:

> (a) If any reexamination is ordered while a prior *inter partes* reexamination proceeding is pending for the same patent and prosecution in the prior *inter partes* reexamination proceeding has not been terminated, a decision may be made to merge the two proceedings or to suspend one of the two proceedings. Where merger is ordered, the merged examination will normally result in the issuance and publication of a single reexamination certificate under § 1.997.

The 95/001,781 and 95/001,802 *inter partes* proceedings are merged. The merged proceeding will be conducted in accordance with the guidelines and requirements that follow.

II. THE SAME CLAIMS MUST BE MAINTAINED IN ALL PROCEEDINGS

Presently, the claims (and specification) are identical in both files. Patent owner is required to continue to maintain the same claims (and specification) in both files *throughout the merged proceeding.*

III. CONDUCT OF MERGED PROCEEDING

A. Governing regulations for the merged proceeding:

The present decision merges two *inter partes* reexamination proceedings. Pursuant to 37 CFR 1.989(b), the merged proceeding is governed by 37 CFR §§ 1.902 through 1.997. Pursuant to 37 CFR 1.989(a), the merged examination will normally result in the issuance and publication of a single reexamination certificate under 37 CFR 1.997.

B. *Inter partes* Third Party Requester Participation:

In this instance, as the requester of each proceeding is the same real-party-in-interest, the merged proceeding will be conducted consistent with a proceeding that would have resulted from a single request.

Thus, the standard procedures for *inter partes* reexamination will apply and third party requester's comment rights and appeal rights will be consistent with the filing of a single request. That is, only one set of comments may be filed (where permitted) and the third party requester may file a single appeal treating the merged proceeding as a single proceeding containing all the issues raised in both proceedings.

C. Papers mailed/filed:

All papers mailed by the Office throughout the merged proceeding will take the form of a single action which applies to all proceedings. All papers issued by the Office, or filed by the patent owner and the third party requesters, will contain the identifying data for all proceedings and will be physically entered in each reexamination file. All papers filed by the patent owner and the third party requesters must consist of a single paper, **filed in duplicate**, each bearing a signature and identifying data for all files, for entry into each file.

Patent owner and requesters are reminded that every paper filed in the merged proceeding subsequent to this decision must be served on all the other parties, and every paper filed must reflect that such paper was served on all the other parties, pursuant to 37 CFR 1.903. All papers are to be addressed to the Central Reexamination Unit as provided above.

D. Fees:

Where a paper is filed that requires payment of a fee (*e.g.*, petition fee, excess claims fee, extension of time fee, appeal fee, brief fee, oral hearing fee), only a single fee need be paid. For example, only one fee need be paid for any patent owner's appellant brief (or that of an *inter partes* reexamination requester) which may be filed, even though the brief relates to merged

multiple proceedings, and copies must be filed (as pointed out above) for each file in the merged proceeding.

E. Citation of Patents and Printed Publications:

Upon return of the present merged proceeding to the examiner, the examiner will review the files to ensure that each file contains identical citations of prior patents and printed publications, and will cite such documents as are necessary as part of the next action in order to place the files in that condition.

CONCLUSION

1. *Inter partes* Reexamination Control Nos. 95/001,781 and 95/001,802 are merged into a single proceeding, to be conducted in accordance with the procedure set forth above in Part III of this decision.

2. Any questions concerning this communication should be directed to Joseph F. Weiss, Jr., Legal Advisor, at 571-272-7759.

Pinchus M. Laufer
Senior Legal Advisor
Office of Patent Legal Administration

UNITED STATES PATENT AND TRADEMARK OFFICE

UNITED STATES DEPARTMENT OF COMMERCE
United States Patent and Trademark Office
Address: COMMISSIONER FOR PATENTS
P.O. Box 1450
Alexandria, Virginia 22313-1450
www.uspto.gov

APPLICATION NO.	FILING DATE	FIRST NAMED INVENTOR	ATTORNEY DOCKET NO.	CONFIRMATION NO.
95/001,788	10/18/2011	Victor Larson	41484-80140	5823

23630 7590 12/19/2011

McDermott Will & Emery
600 13th Street, NW
Washington, DC 20005-3096

EXAMINER	
FOSTER, ROLAND G	
ART UNIT	PAPER NUMBER
3992	
MAIL DATE	DELIVERY MODE
12/19/2011	PAPER

Please find below and/or attached an Office communication concerning this application or proceeding.

The time period for reply, if any, is set in the attached communication.

UNITED STATES PATENT AND TRADEMARK OFFICE

Commissioner for Patents
United States Patents and Trademark Office
P.O.Box 1450
Alexandria, VA 22313-1450
www.uspto.gov

DO NOT USE IN PALM PRINTER

THIRD PARTY REQUESTER'S CORRESPONDENCE ADDRESS

SIDLEY AUSTIN LLP
717 NORTH HARWOOD
SUITE 3400
DALLAS, TX 75201

Date: 12-19-11

Transmittal of Communication to Third Party Requester
Inter Partes Reexamination

REEXAMINATION CONTROL NO. : 95001788
PATENT NO. : 7418504
TECHNOLOGY CENTER : 3999
ART UNIT : 3992

Enclosed is a copy of the latest communication from the United States Patent and Trademark Office in the above identified Reexamination proceeding. 37 CFR 1.903.

Prior to the filing of a Notice of Appeal, each time the patent owner responds to this communication, the third party requester of the inter partes reexamination may once file written comments within a period of 30 days from the date of service of the patent owner's response. This 30-day time period is statutory (35 U.S.C. 314(b)(2)), and, as such, it cannot be extended. See also 37 CFR 1.947.

If an ex parte reexamination has been merged with the inter partes reexamination, no responsive submission by any ex parte third party requester is permitted.

All correspondence relating to this inter partes reexamination proceeding should be directed to the Central Reexamination Unit at the mail, FAX, or hand-carry addresses given at the end of the communication enclosed with this transmittal.

UNITED STATES PATENT AND TRADEMARK OFFICE

MAILED

Commissioner for Patents
United States Patent and Trademark Office
P.O. Box 1450
Alexandria, VA 22313-1450
www.uspto.gov

DEC 19 2011

CENTRAL REEXAMINATION UNIT

Toby H. Kusmer
MCDERMOTT, WILL & EMERY LLP
600 13th Street, NW
Washington DC 20005

(For Patent Owner)

Jeffrey P. Kushan
SIDLEY AUSTIN LLP
717 North Harwood, Suite 3400
Dallas, Texas 75201

(For Third Party Requester)

In re: Larson et al.
Inter Partes Reexamination Proceeding
Control No.: 95/001,788
For: U.S. Patent No. 7,418,504

DECISION ON PETITION TO VACATE FILING DATE OF *INTER PARTES* REEXAMINATION PROCEEDING

This is a decision on the 21 November 2011 petition filed by the patent owner under 37 CFR 1.181 entitled, "Petition to Vacate Filing Date of *Inter Partes* Reexamination" [hereinafter "the petition to vacate"]. The petition to vacate requests that the Office vacate the filing date of the reexamination proceeding because the request for reexamination is not based on prior art patents or printed publications. The third party requester filed a petition under 37 CFR 1.182 on 5 December 2011 to oppose the petition to vacate [hereinafter "the petition in opposition"].

The petition in opposition is being treated as a petition under 37 CFR 1.181. As such, these petitions are before the Director of the Central Reexamination Unit.

The petition to vacate is dismissed for the reasons set forth below.

The petition in opposition is dismissed for the reasons set forth below.

REVIEW OF RELEVANT FACTS

- U.S. Patent No. 7,418,504 [hereinafter "the '504 patent] was granted to Larson et al. on 26 August 2008.

- On 18 October 2011, a request for *inter partes* reexamination was filed by a third party requester. The resulting reexamination proceeding was assigned control number 95/001,788 [hereinafter "the '1788 proceeding"].

- On 21 November 2011, patent owner filed the petition to vacate.

- On 5 December 2011, the third party requester filed the petition in opposition.

STATUTES, REGULATIONS, AND PATENT EXAMINING PROCEDURES

37 CFR 1.4 Nature of Correspondence and Signature Requirements

(c) Since different matters may be considered by different branches or sections of the United States Patent and Trademark Office, each distinct subject, inquiry or order must be contained in a separate paper to avoid confusion and delay in answering papers dealing with different subjects.

37 CFR 1.181 Petition to the Director

(a) Petition may be taken to the Director:
(1) From any action or requirement of any examiner in the ex parte prosecution of an application, or in ex parte or inter partes prosecution of a reexamination proceeding which is not subject to appeal to the Board of Patent Appeals and Interferences or to the court.

37 CFR 1.939 Unauthorized Papers in *Inter Partes* Reexamination

(a) If an unauthorized paper is filed by any party at any time during the inter partes reexamination proceeding it will not be considered and may be returned.
(b) Unless otherwise authorized, no paper shall be filed prior to the initial Office action on the merits of the inter partes reexamination.

MPEP § 2625 Untimely Paper Filed Prior to First Office Action

Pursuant to 37 CFR 1.939, after filing of a request for inter partes reexamination, no papers directed to the merits of the reexamination other than (A) citations of patents or printed publications under 37 CFR 1.501 and 1.933, (B) another complete request under 37 CFR 1.510 or 37 CFR 1.915, or (C) notifications pursuant to MPEP § 2686, should be filed with the Office prior to the date of the first Office action in the reexamination proceeding. Any papers directed to the merits of the reexamination, other than those under 37 CFR 1.501, 1.933, 1.510 or 1.915, or under MPEP § 2686, filed prior to the date of the first Office action will be returned to the sender without consideration. If the papers are entered prior to discovery of the impropriety, such papers will be expunged from the record. A copy of the letter providing notification of the returned papers or expungement will be made of record in the patent file. However, no copy of the returned/expunged papers will be retained by the Office.

DECISION ON PETITION TO VACATE THE FILING DATE

Patent owner filed this petition to vacate after the filing of the request for *inter partes* reexamination but prior to the date of the first Office action in the reexamination proceeding. Although page 5 of the petition contains a statement that relief is sought under 37 CFR 1.183 for entry of the petition, the petition is being addressed solely under 37 CFR 1.181. The patent owner's combined petition under 37 CFR 1.181 and 1.183 is deemed improper because it combines two distinct petitions, which is not compliant with 37 CFR 1.4. The relief requested under 37 CFR 1.183 is procedurally dismissed under 37 CFR 1.4.

The MPEP clearly states that "[p]ursuant to 37 CFR 1.939, after filing of a request for *inter partes* reexamination, no papers directed to the merits of the reexamination other than [for certain limited exceptions] should be filed with the Office prior to the date of the first Office action in the reexamination proceeding." MPEP § 2625. These exceptions include "(A) citations of patents or printed publications under 37 CFR 1.501 and 1.933, (B) another complete request under 37 CFR 1.510 or 37 CFR 1.915, [and] (C) notifications pursuant to MPEP § 2686." *Id.*

In this case, the petition to vacate is directed to the merits of the reexamination because it discusses whether the request for reexamination is based on printed publications, which is an appealable matter according to MPEP § 2646(II). The MPEP goes on to point out that such a matter "can be argued by the patent owner and appealed during the examination phase of the reexamination proceeding." *Id.* Therefore, the issues concerning whether or not a document is a printed publication are not appropriate to address via a petition even if filed after the first Office action.

In addition, the petition to vacate does not fall within one of the enumerated exceptions listed in MPEP § 2625. The petition to vacate does not constitute a citation of patents or printed publications under 37 CFR 1.501 and 1.933. The petition to vacate does not constitute another complete request under 37 CFR 1.510 or 37 CFR 1.915. Finally, the petition to vacate is not a notification pursuant to MPEP § 2686.

Since the petition to vacate goes to the merits of the case and since the petition to vacate does not fall within one of the exceptions enumerated in MPEP § 2625, the petition is an unauthorized or improper paper under 37 CFR 1.939.

This petition is **dismissed** as being an improper paper.

DECISION ON PETITION IN OPPOSITION

The third party requester filed the petition in opposition to oppose the petition to vacate. The filing of the petition occurred after the filing of the request for *inter partes* reexamination but prior to the date of the first Office action in the reexamination proceeding. Since the petition to vacate is improper, there is no petition filed under 37 CFR 1.181 upon which the third party requester may base the filing of the single submission in opposition. In addition, the petition in opposition is directed to the merits of the reexamination for the same reasons discussed above regarding the petition to vacate. Finally, the petition in opposition also does not fall within one of the enumerated exceptions set forth above.

Since the petition in opposition goes to the merits of the case and since the petition in opposition does not fall within one of the exceptions enumerated in MPEP § 2625, the petition in opposition is deemed an unauthorized or improper paper under 37 CFR 1.939.

This petition is **dismissed** as being an improper paper.

In view of the above, the present petitions in the reexamination proceeding do not have an entry right under the rules. Therefore, the present petitions will be expunged from record in the '1788 reexamination proceeding, and are being returned to the petitioners ***without consideration of the substance of the petitions***. As the petitions has been entered into the electronic Image File Wrapper (IFW) record, the petitions will be "returned" by closing the paper in the IFW, and marking the paper nonpublic to expunge it from the record. The present decision will, however, be made of record in the reexamination proceeding. See also MPEP § 2625.

CONCLUSION

1. The patent owner's petition under 37 CFR 1.181 to vacate the reexamination proceeding is hereby **dismissed.**

2. The third party requester's petition in opposition is hereby **dismissed.**

3. The patent owner's petition under 37 CFR 1.181 and third party requester's petition in opposition **will be expunged** from the record by closing the papers in the IFW record, and marking the papers nonpublic. This decision, however, will be of record in the proceeding.

4. The reexamination proceeding will be returned to the examiner to act on the request for reexamination.

5. Any response should be addressed as follows:

By Mail to: Mail Stop *Inter Partes* Reexam
Central Reexamination Unit
Commissioner for Patents
United States Patent & Trademark Office
P. O. Box 1450
Alexandria, VA 22313-1450

By Fax to: (571) 273-9900
Central Reexamination Unit

By Hand: Customer Service Window
Randolph Building
401 Dulany Street
Alexandria, VA 22314

By EFS: Registered users of EFS-Web may alternatively submit such correspondence via EFS-Web, at **https://efs.uspto.gov/efile/myportal/efs-registered**. EFS-Web offers the benefit of quick submission to the particular area of the Office that needs to act on the correspondence. Also, EFS-Web submissions are "soft scanned" (i.e., electronically uploaded) directly into the official file for the reexamination proceeding, which offers parties the opportunity to review the content of their submissions after the "soft scanning" process is complete.

6. Telephone inquiries with regard to this decision should be directed to Daniel Ryman, SPE AU 3992, at (571) 272-3152, in the event that Daniel Ryman is unavailable, to the undersigned at (571) 272-0700.

Irem Yucel
Director, Central Reexamination Unit

UNITED STATES PATENT AND TRADEMARK OFFICE

UNITED STATES DEPARTMENT OF COMMERCE
United States Patent and Trademark Office
Address: COMMISSIONER FOR PATENTS
P.O. Box 1450
Alexandria, Virginia 22313-1450
www.uspto.gov

APPLICATION NO.	FILING DATE	FIRST NAMED INVENTOR	ATTORNEY DOCKET NO.	CONFIRMATION NO.
95/001,789	10/18/2011	7921211	41484-80150	6053

23630 7590 04/04/2012

McDermott Will & Emery
600 13th Street, NW
Washington, DC 20005-3096

EXAMINER	
ART UNIT	PAPER NUMBER

DATE MAILED: 04/04/2012

Please find below and/or attached an Office communication concerning this application or proceeding.

UNITED STATES PATENT AND TRADEMARK OFFICE

Commissioner for Patents
United States Patents and Trademark Office
P.O.Box 1450
Alexandria, VA 22313-1450
www.uspto.gov

DO NOT USE IN PALM PRINTER

THIRD PARTY REQUESTER'S CORRESPONDENCE ADDRESS
SIDLEY AUSTIN LLP
717 NORTH HARWOOD
SUITE 3400
DALLAS, TX 75201

Date: **MAILED**

APR 0 4 2012

CENTRAL REEXAMINATION UNIT

Transmittal of Communication to Third Party Requester
Inter Partes Reexamination

REEXAMINATION CONTROL NO. : 95001789
PATENT NO. : 7921211
TECHNOLOGY CENTER : 3999
ART UNIT : 3992

Enclosed is a copy of the latest communication from the United States Patent and Trademark Office in the above identified Reexamination proceeding. 37 CFR 1.903.

Prior to the filing of a Notice of Appeal, each time the patent owner responds to this communication, the third party requester of the inter partes reexamination may once file written comments within a period of 30 days from the date of service of the patent owner's response. This 30-day time period is statutory (35 U.S.C. 314(b)(2)), and, as such, it cannot be extended. See also 37 CFR 1.947.

If an ex parte reexamination has been merged with the inter partes reexamination, no responsive submission by any ex parte third party requester is permitted.

All correspondence relating to this inter partes reexamination proceeding should be directed to the Central Reexamination Unit at the mail, FAX, or hand-carry addresses given at the end of the communication enclosed with this transmittal.

UNITED STATES PATENT AND TRADEMARK OFFICE

Commissioner for Patents
United States Patent and Trademark Office
P.O. Box 1450
Alexandria, VA 22313-1450
www.uspto.gov

MAILED

APR 04 2012

CENTRAL REEXAMINATION UNIT

MCDERMOTT, WILL & EMERY LLP : (For Patent Owner)
600 13th Street, NW :
Washington DC 20005 :

SIDLEY AUSTIN LLP : (For Third Party Requester)
717 North Harwood, Suite 3400 :
Dallas, Texas 75201 :

In re: Larson et al. : DECISION ON PETITION TO VACATE
Inter Partes Reexamination Proceeding : FILING DATE OF *INTER PARTES*
Control No.: 95/001,789 : REEXAMINATION PROCEEDING
For: U.S. Patent No. 7,921,211 :

This is a decision on the 21 November 2011 petition filed by the patent owner under 37 CFR 1.181 entitled, "Petition to Vacate Filing Date of *Inter Partes* Reexamination" [hereinafter "the petition to vacate"]. The petition to vacate requests that the Office vacate the filing date of the reexamination proceeding because the request for reexamination is not based on prior art patents or printed publications. The third party requester filed a petition under 37 CFR 1.182 on 5 December 2011 to oppose the petition to vacate [hereinafter "the petition in opposition"].

The petition in opposition is being treated as a petition under 37 CFR 1.181. As such, these petitions are before the Director of the Central Reexamination Unit.

The petition to vacate is dismissed for the reasons set forth below.

The petition in opposition is dismissed for the reasons set forth below.

REVIEW OF RELEVANT FACTS

- U.S. Patent No. 7,921,211 [hereinafter "the '211 patent] was granted to Larson et al. on 5 April 2011.

- On 18 October 2011, a request for *inter partes* reexamination was filed by a third party requester. The resulting reexamination proceeding was assigned control number 95/001,789 [hereinafter "the '789 proceeding"].

- On 21 November 2011, patent owner filed the petition to vacate.

- On 5 December 2011, the third party requester filed the petition in opposition.

- On 18 January 2012, the Office ordered reexamination in the '789 proceeding and issued an Office action on the merits.

STATUTES, REGULATIONS, AND PATENT EXAMINING PROCEDURES

37 CFR 1.4 Nature of Correspondence and Signature Requirements

(c) Since different matters may be considered by different branches or sections of the United States Patent and Trademark Office, each distinct subject, inquiry or order must be contained in a separate paper to avoid confusion and delay in answering papers dealing with different subjects.

37 CFR 1.181 Petition to the Director

(a) Petition may be taken to the Director:
(1) From any action or requirement of any examiner in the ex parte prosecution of an application, or in ex parte or inter partes prosecution of a reexamination proceeding which is not subject to appeal to the Board of Patent Appeals and Interferences or to the court.

37 CFR 1.939 Unauthorized Papers in *Inter Partes* Reexamination

(a) If an unauthorized paper is filed by any party at any time during the inter partes reexamination proceeding it will not be considered and may be returned.
(b) Unless otherwise authorized, no paper shall be filed prior to the initial Office action on the merits of the inter partes reexamination.

MPEP § 2625 Untimely Paper Filed Prior to First Office Action

> Pursuant to 37 CFR 1.939, after filing of a request for inter partes reexamination, no papers directed to the merits of the reexamination other than (A) citations of patents or printed publications under 37 CFR 1.501 and 1.933, (B) another complete request under 37 CFR 1.510 or 37 CFR 1.915, or (C) notifications pursuant to MPEP § 2686, should be filed with the Office prior to the date of the first Office action in the reexamination proceeding. Any papers directed to the merits of the reexamination, other than those under 37 CFR 1.501, 1.933, 1.510 or 1.915, or under MPEP § 2686, filed prior to the date of the first Office action will be returned to the sender without consideration. If the papers are entered prior to discovery of the impropriety, such papers will be expunged from the record. A copy of the letter providing notification of the returned papers or expungement will be made of record in the patent file. However, no copy of the returned/expunged papers will be retained by the Office.

DECISION ON PETITION TO VACATE THE FILING DATE

Patent owner filed this petition to vacate after the filing of the request for *inter partes* reexamination but prior to the date of the first Office action in the reexamination proceeding. Although page 5 of the petition contains a statement that relief is sought under 37 CFR 1.183 for entry of the petition, the petition is being addressed solely under 37 CFR 1.181. The patent owner's combined petition under 37 CFR 1.181 and 1.183 is deemed improper because it combines two distinct petitions, which is not compliant with 37 CFR 1.4. The relief requested under 37 CFR 1.183 is procedurally dismissed under 37 CFR 1.4.

The MPEP clearly states that "[p]ursuant to 37 CFR 1.939, after filing of a request for *inter partes* reexamination, no papers directed to the merits of the reexamination other than [for certain limited exceptions] should be filed with the Office prior to the date of the first Office action in the reexamination proceeding." MPEP § 2625. These exceptions include "(A) citations of patents or printed publications under 37 CFR 1.501 and 1.933, (B) another complete request under 37 CFR 1.510 or 37 CFR 1.915, [and] (C) notifications pursuant to MPEP § 2686." *Id.*

In this case, the petition to vacate is directed to the merits of the reexamination because it discusses whether the request for reexamination is based on printed publications, which is an appealable matter according to MPEP § 2646(II). The MPEP goes on to point out that such a matter "can be argued by the patent owner and appealed during the examination phase of the

reexamination proceeding." *Id.* Therefore, the issues concerning whether or not a document is a printed publication are not appropriate to address via a petition even if filed after the first Office action.

In addition, the petition to vacate does not fall within one of the enumerated exceptions listed in MPEP § 2625. The petition to vacate does not constitute a citation of patents or printed publications under 37 CFR 1.501 and 1.933. The petition to vacate does not constitute another complete request under 37 CFR 1.510 or 37 CFR 1.915. Finally, the petition to vacate is not a notification pursuant to MPEP § 2686.

Since the petition to vacate goes to the merits of the case and since the petition to vacate does not fall within one of the exceptions enumerated in MPEP § 2625, the petition is an unauthorized or improper paper under 37 CFR 1.939.

This petition is **dismissed** as being an improper paper.

DECISION ON PETITION IN OPPOSITION

The third party requester filed the petition in opposition to oppose the petition to vacate. The filing of the petition occurred after the filing of the request for *inter partes* reexamination but prior to the date of the first Office action in the reexamination proceeding. Since the petition to vacate is improper, there is no petition filed under 37 CFR 1.181 upon which the third party requester may base the filing of the single submission in opposition. In addition, the petition in opposition is directed to the merits of the reexamination for the same reasons discussed above regarding the petition to vacate. Finally, the petition in opposition also does not fall within one of the enumerated exceptions set forth above.

Since the petition in opposition goes to the merits of the case and since the petition in opposition does not fall within one of the exceptions enumerated in MPEP § 2625, the petition in opposition is deemed an unauthorized or improper paper under 37 CFR 1.939.

This petition is **dismissed** as being an improper paper.

In view of the above, the present petitions in the reexamination proceeding do not have an entry right under the rules. Therefore, the present petitions will be expunged from record in the '789 reexamination proceeding, and are being returned to the petitioners ***without consideration of the substance of the petitions***. As the petitions has been entered into the electronic Image File Wrapper (IFW) record, the petitions will be "returned" by closing the paper in the IFW, and marking the paper nonpublic to expunge it from the record. The present decision will, however, be made of record in the reexamination proceeding. See also MPEP § 2625.

CONCLUSION

1. The patent owner's petition under 37 CFR 1.181 to vacate the reexamination proceeding is hereby **dismissed.**

2. The third party requester's petition in opposition is hereby **dismissed.**

3. The patent owner's petition under 37 CFR 1.181 and third party requester's petition in opposition **will be expunged** from the record by closing the papers in the IFW record, and marking the papers nonpublic. This decision, however, will be of record in the proceeding.

4. The patent owner is required to file a response to the Office action, mailed on 18 January 2012, within the time period set forth in that Office action as modified by the grant of an extension of time, mailed on 16 February 2012.

5. Any response should be addressed as follows:

By Mail to: Mail Stop *Inter Partes* Reexam
Central Reexamination Unit
Commissioner for Patents
United States Patent & Trademark Office
P. O. Box 1450
Alexandria, VA 22313-1450

By Fax to: (571) 273-9900
Central Reexamination Unit

By Hand: Customer Service Window
Randolph Building
401 Dulany Street
Alexandria, VA 22314

By EFS: Registered users of EFS-Web may alternatively submit such correspondence via EFS-Web, at **https://efs.uspto.gov/efile/myportal/efs-registered**. EFS-Web offers the benefit of quick submission to the particular area of the Office that needs to act on the correspondence. Also, EFS-Web submissions are "soft scanned" (i.e.,

electronically uploaded) directly into the official file for the reexamination proceeding, which offers parties the opportunity to review the content of their submissions after the "soft scanning" process is complete.

6. Telephone inquiries with regard to this decision should be directed to Daniel Ryman, SPE AU 3992, at (571) 272-3152, in the event that Daniel Ryman is unavailable, to the undersigned at (571) 272-0700.

Irem Yucel
Director, Central Reexamination Unit

UNITED STATES PATENT AND TRADEMARK OFFICE

UNITED STATES DEPARTMENT OF COMMERCE
United States Patent and Trademark Office
Address: COMMISSIONER FOR PATENTS
P.O. Box 1450
Alexandria, Virginia 22313-1450
www.uspto.gov

APPLICATION NO.	FILING DATE	FIRST NAMED INVENTOR	ATTORNEY DOCKET NO.	CONFIRMATION NO.
95/001,792	10/25/2011	7,188,180	43614.100	1972

22852 7590 02/10/2012

FINNEGAN, HENDERSON, FARABOW, GARRETT & DUNNER LLP
901 NEW YORK AVENUE, NW
WASHINGTON, DC 20001-4413

EXAMINER	
ART UNIT	PAPER NUMBER

DATE MAILED: 02/10/2012

Please find below and/or attached an Office communication concerning this application or proceeding.

UNITED STATES PATENT AND TRADEMARK OFFICE

Commissioner for Patents
United States Patents and Trademark Office
P.O.Box 1450
Alexandria, VA 22313-1450
www.uspto.gov

DO NOT USE IN PALM PRINTER

MAILED

THIRD PARTY REQUESTER'S CORRESPONDENCE ADDRESS
HAYNES AND BOONE, LLP
IP SECTION
2323 VICTORY AVENUE, SUITE 700
DALLAS, TX 75219

Date: FEB 1 0 2012

CENTRAL REEXAMINATION UNIT

Transmittal of Communication to Third Party Requester
Inter Partes Reexamination

REEXAMINATION CONTROL NO. : 95001792
PATENT NO. : 7188180
TECHNOLOGY CENTER : 3999
ART UNIT : 3992

Enclosed is a copy of the latest communication from the United States Patent and Trademark Office in the above identified Reexamination proceeding. 37 CFR 1.903.

Prior to the filing of a Notice of Appeal, each time the patent owner responds to this communication, the third party requester of the inter partes reexamination may once file written comments within a period of 30 days from the date of service of the patent owner's response. This 30-day time period is statutory (35 U.S.C. 314(b)(2)), and, as such, it cannot be extended. See also 37 CFR 1.947.

If an ex parte reexamination has been merged with the inter partes reexamination, no responsive submission by any ex parte third party requester is permitted.

All correspondence relating to this inter partes reexamination proceeding should be directed to the Central Reexamination Unit at the mail, FAX, or hand-carry addresses given at the end of the communication enclosed with this transmittal.

UNITED STATES PATENT AND TRADEMARK OFFICE

Commissioner for Patents
United States Patent and Trademark Office
P.O. Box 1450
Alexandria, VA 22313-1450
www.uspto.gov

MAILED

FEB 10 2012

CENTRAL REEXAMINATION UNIT

Joseph E. Palys
FINNEGAN, HENDERSON, FARABOW, GARRETT & DUNNER LLP
901 New York Avenue, N.W.
Washington, D.C.. 20001-4413

(For Patent Owner)

David L. McCombs
HAYNES AND BOONE LLP
2323 Victory Ave., Suite 700
Dallas, Texas 75219

(For Third Party Requester)

In re: Larson et al.
Inter Partes Reexamination Proceeding
Control No.: 95/001,792
For: U.S. Patent No. 7,188,180

DECISION ON PETITION TO VACATE FILING DATE OF *INTER PARTES* REEXAMINATION PROCEEDING AND PETITION IN OPPOSITION THEREOF

This is a decision on the 17 November 2011 petition filed by the patent owner under 37 CFR 1.181 entitled "Petition to Vacate *Inter Partes* Reexamination" [hereinafter "petition to vacate"] and the 1 December 2011 petition filed by the third party requester under 37 CFR 1.182 entitled "Petition in Opposition to Patent Owner's Petition to Vacate *Inter Partes* Reexamination" [hereinafter "petition in opposition"]. The petition to vacate requests that the Office vacate the filing date of the reexamination proceeding because the request for reexamination is not based on prior art patents or printed publications.

The petition in opposition is being treated as a petition under 37 CFR 1.181. As such, these petitions are before the Director of the Central Reexamination Unit.

The petition to vacate is dismissed for the reasons set forth below.

The petition to oppose is dismissed for the reasons set forth below.

REVIEW OF RELEVANT FACTS

- U.S. Patent No. 7,188,180 [hereinafter "'180 patent"] was granted to Larson et al. on 6 March 2007.

- On 25 October 2011, a request for *inter partes* reexamination was filed by a third party requester. The resulting reexamination proceeding was assigned control number 95/001,792 [hereinafter "the '1792 proceeding"].

- On 17 November 2011, patent owner filed the petition to vacate.

- On 1 December 2011, the third party requester filed the petition in opposition.

STATUTES, REGULATIONS, AND PATENT EXAMINING PROCEDURES

37 CFR 1.4 Nature of Correspondence and Signature Requirements

(c) Since different matters may be considered by different branches or sections of the United States Patent and Trademark Office, each distinct subject, inquiry or order must be contained in a separate paper to avoid confusion and delay in answering papers dealing with different subjects.

37 CFR 1.181 Petition to the Director

(a) Petition may be taken to the Director:
(1) From any action or requirement of any examiner in the ex parte prosecution of an application, or in ex parte or inter partes prosecution of a reexamination proceeding which is not subject to appeal to the Board of Patent Appeals and Interferences or to the court.

37 CFR 1.939 Unauthorized Papers in *Inter Partes* Reexamination

(a) If an unauthorized paper is filed by any party at any time during the inter partes reexamination proceeding it will not be considered and may be returned.
(b) Unless otherwise authorized, no paper shall be filed prior to the initial Office action on the merits of the inter partes reexamination.

MPEP § 2625 Untimely Paper Filed Prior to First Office Action

> Pursuant to 37 CFR 1.939, after filing of a request for inter partes reexamination, no papers directed to the merits of the reexamination other than (A) citations of patents or printed publications under 37 CFR 1.501 and 1.933, (B) another complete request under 37 CFR 1.510 or 37 CFR 1.915, or (C) notifications pursuant to MPEP § 2686, should be filed with the Office prior to the date of the first Office action in the reexamination proceeding. Any papers directed to the merits of the reexamination, other than those under 37 CFR 1.501, 1.933, 1.510 or 1.915, or under MPEP § 2686, filed prior to the date of the first Office action will be returned to the sender without consideration. If the papers are entered prior to discovery of the impropriety, such papers will be expunged from the record. A copy of the letter providing notification of the returned papers or expungement will be made of record in the patent file. However, no copy of the returned/expunged papers will be retained by the Office.

DECISION ON PETITION TO VACATE THE FILING DATE

Patent owner filed this petition to vacate after the filing of the request for *inter partes* reexamination but prior to the date of the first Office action in the reexamination proceeding. Although page 1 of the petition contains a statement that relief is sought under 37 CFR 1.183 for entry of the petition, the petition is being addressed solely under 37 CFR 1.181. The patent owner's combined petition under 37 CFR 1.181 and 1.183 is deemed improper because it combines two distinct petitions, which is not compliant with 37 CFR 1.4. The relief requested under 37 CFR 1.183 is procedurally dismissed under 37 CFR 1.4.

The MPEP clearly states that "[p]ursuant to 37 CFR 1.939, after filing of a request for *inter partes* reexamination, no papers directed to the merits of the reexamination other than [for certain limited exceptions] should be filed with the Office prior to the date of the first Office action in the reexamination proceeding." MPEP 2625. These exceptions include "(A) citations of patents or printed publications under 37 CFR 1.501 and 1.933, (B) another complete request under 37 CFR 1.510 or 37 CFR 1.915, [and] (C) notifications pursuant to MPEP 2686." *Id.*

In this case, the petition to vacate is directed to the merits of the reexamination because it discusses whether the request for reexamination is based on printed publications, which is an appealable matter according to MPEP 2646(II). The MPEP goes on to point out that such a matter "can be argued by the patent owner and appealed during the examination phase of the reexamination proceeding." *Id.* Therefore, the issues concerning whether or not a document is a

printed publication are not appropriate to address via a petition even if filed after the first Office action.

In addition, the petition to vacate does not fall within one of the enumerated exceptions listed in MPEP § 2625. The petition to vacate does not constitute a citation of patents or printed publications under 37 CFR 1.501 and 1.933. The petition to vacate does not constitute another complete request under 37 CFR 1.510 or 37 CFR 1.915. Finally, the petition to vacate is not a notification pursuant to MPEP § 2686.

Since the petition to vacate goes to the merits of the case and since the petition to vacate does not fall within one of the exceptions enumerated in MPEP § 2625, the petition is an unauthorized or improper paper under 37 CFR 1.939.

This petition is **dismissed** as being an improper paper.

DECISION ON PETITION IN OPPOSITION

The third party requester filed the petition in opposition to oppose the petition to vacate. The filing of the petition occurred after the filing of the request for *inter partes* reexamination but prior to the date of the first Office action in the reexamination proceeding. Since the petition to vacate is improper, there is no petition filed under 37 CFR 1.181 upon which the third party requester may base the filing of the single submission in opposition. In addition, the petition in opposition is directed to the merits of the reexamination for the same reasons discussed above regarding the petition to vacate. Finally, the petition in opposition also does not fall within one of the enumerated exceptions set forth above.

Since the petition in opposition goes to the merits of the case and since the petition in opposition does not fall within one of the exceptions enumerated in MPEP § 2625, the petition in opposition is deemed an unauthorized or improper paper under 37 CFR 1.939.

This petition is **dismissed** as being an improper paper.

In view of the above, the present petitions in the reexamination proceeding do not have an entry right under the rules. Therefore, the present petitions will be expunged from record in the '1788 reexamination proceeding, and are being returned to the petitioners ***without consideration of the substance of the petitions***. As the petitions has been entered into the electronic Image File Wrapper (IFW) record, the petitions will be "returned" by closing the paper in the IFW, and marking the paper nonpublic to expunge it from the record. The present decision will, however, be made of record in the reexamination proceeding. See also MPEP § 2625.

CONCLUSION

1. The patent owner's petition under 37 CFR 1.181 to vacate the reexamination proceeding is hereby **dismissed.**

2. The third party requester's petition in opposition is hereby **dismissed.**

3. The patent owner's petition under 37 CFR 1.181 and third party requester's petition in opposition **will be expunged** from the record by closing the papers in the IFW record, and marking the papers nonpublic. This decision, however, will be of record in the proceeding.

4. The reexamination proceeding will be returned to the examiner to act on the request for reexamination.

5. Any response should be addressed as follows:

By Mail to: Mail Stop *Inter Partes* Reexam
Central Reexamination Unit
Commissioner for Patents
United States Patent & Trademark Office
P. O. Box 1450
Alexandria, VA 22313-1450

By Fax to: (571) 273-9900
Central Reexamination Unit

By Hand: Customer Service Window
Randolph Building
401 Dulany Street
Alexandria, VA 22314

By EFS: Registered users of EFS-Web may alternatively submit such correspondence via EFS-Web, at **https://efs.uspto.gov/efile/myportal/efs-registered**. EFS-Web offers the benefit of quick submission to the particular area of the Office that needs to act on the correspondence. Also, EFS-Web submissions are "soft scanned" (i.e., electronically uploaded) directly into the official file for the reexamination

proceeding, which offers parties the opportunity to review the content of their submissions after the "soft scanning" process is complete.

6. Telephone inquiries with regard to this decision should be directed to Matthew Brooks, SPE AU 3992, at (571)272-8112, in the event that Matthew Brooks is unavailable, to the undersigned at (571) 272-0700.

Irem Yucel
Director, Central Reexamination Unit

UNITED STATES PATENT AND TRADEMARK OFFICE

Commissioner for Patents
United States Patent and Trademark Office
P.O. Box 1450
Alexandria, VA 22313-1450
www.uspto.gov

Womble Carlyle Sandridge & Rice LLP
P.O. Box 7037
Atlanta, GA 30357-0037

For Patent Owner

Wood, Herron & Evans, LLP
441 Vine Street,
2700 Carew Tower
Cincinnati, OH 45202

For Third Party Requester

MAILED

FEB 10 2012

CENTRAL REEXAMINATION UNIT

Inter Partes Reexamination Proceeding
Control No. 95/001,796
Filed: December 6, 2011
For: U.S. Patent No. 7,134,551

DECISION ON PATENT
OWNER'S PETITION
UNDER 37 CFR 1.181

This is a decision on patent owner's petition filed January 31, 2012 under 37 CFR 1.181(a) invoking the supervisory authority of The Director of the USPTO, requesting that the Office action mailed January 17, 2012 be withdrawn due to inconsistent and unclear treatment of claims 1-22 of the patent.

The petition is dismissed as being moot.

The examiner, upon further review of the order and Office action mailed January 17, 2012, issued a new order granting reexamination and a new Office action on February 10, 2012 clarifying the status and treatment of claims 1-22 of the patent that is the subject of the instant reexamination proceeding. Accordingly, in view of the mailing of the new actions, the petition is being dismissed as being moot.

Any questions concerning this decision should be directed to Andres Kashnikow, Supervisory Patent Reexamination Specialist in the Central Reexamination Unit, Art Unit 3993, at (571) 272-4361.

Irem Yucel, Director
Central Reexamination Unit

UNITED STATES PATENT AND TRADEMARK OFFICE

UNITED STATES DEPARTMENT OF COMMERCE
United States Patent and Trademark Office
Address: COMMISSIONER FOR PATENTS
P.O. Box 1450
Alexandria, Virginia 22313-1450
www.uspto.gov

APPLICATION NO.	FILING DATE	FIRST NAMED INVENTOR	ATTORNEY DOCKET NO.	CONFIRMATION NO.
95/001,802 → 95/001,781	11/03/2011	Jaime Etcheson	DRIVP011REX2	2515

21912 7590 04/19/2012

VAN PELT, YI & JAMES LLP
10050 N. FOOTHILL BLVD #200
CUPERTINO, CA 95014

EXAMINER	
ART UNIT	PAPER NUMBER

DATE MAILED: 04/19/2012

Please find below and/or attached an Office communication concerning this application or proceeding.

UNITED STATES PATENT AND TRADEMARK OFFICE

Commissioner for Patents
United States Patents and Trademark Office
P.O.Box 1450
Alexandria, VA 22313-1450
www.uspto.gov

DO NOT USE IN PALM PRINTER

THIRD PARTY REQUESTER'S CORRESPONDENCE ADDRESS

JONES DAY
222 EAST 41st STREET
NEW YORK, NY 10017

Date: 4-19-12

Transmittal of Communication to Third Party Requester
Inter Partes Reexamination

REEXAMINATION CONTROL NO. : 95001802 → 95/001,781
PATENT NO. : 7804426
TECHNOLOGY CENTER : 3999
ART UNIT : 3992

Enclosed is a copy of the latest communication from the United States Patent and Trademark Office in the above identified Reexamination proceeding. 37 CFR 1.903.

Prior to the filing of a Notice of Appeal, each time the patent owner responds to this communication, the third party requester of the inter partes reexamination may once file written comments within a period of 30 days from the date of service of the patent owner's response. This 30-day time period is statutory (35 U.S.C. 314(b)(2)), and, as such, it cannot be extended. See also 37 CFR 1.947.

If an ex parte reexamination has been merged with the inter partes reexamination, no responsive submission by any ex parte third party requester is permitted.

All correspondence relating to this inter partes reexamination proceeding should be directed to the Central Reexamination Unit at the mail, FAX, or hand-carry addresses given at the end of the communication enclosed with this transmittal.

UNITED STATES PATENT AND TRADEMARK OFFICE

Commissioner for Patents
United States Patent and Trademark Office
P.O. Box 1450
Alexandria, VA 22313-1450
www.uspto.gov

MAILED

APR 19 2012

CENTRAL REEXAMINATION UNIT

VAN PELT, YI & JAMES LLP (For Patent Owner)
10050 N. FOOTHILL BLVD #200
CUPERTINO CA 95014

JONES DAY (For Third Party Requester)
222 EAST 41ST STREET
NEW YORK, NY 10017

In re Jamie Etcheson	:	
Inter partes Reexamination	:	
Control No. 95/001,781	:	**DECISION**
Filed: October 11, 2011	:	**SUA SPONTE**
For: U.S. Patent No. 7,804,426	:	**TO MERGER**
	:	***INTER PARTES***
In re Jamie Etcheson	:	**REEXAMINATION**
Control No. 95/001,802	:	**PROCEEDINGS**
Filed: November 3, 2011	:	
For: U.S. Patent No. 7,804,426	:	

The above-captioned reexamination proceedings are before the Office of Patent Legal Administration for *sua sponte* consideration of whether the proceedings should be merged (consolidated) at this time.

BACKGROUND

1. On September 28, 2010 the Office issued U.S. Patent No. 7,804,426 (the '426 patent) to Jamie Etcheson with thirty-three claims.

2. On October 11, 2011, a third party requester filed a request for *inter partes* reexamination of all the claims of the '426 patent, assigned Control No. 95/001,781 (the '1781 proceeding). The request identified SmartDrive Systems, Inc. (hereinafter "the requester") as the real party in interest.

3. On November 3, 2011, the same third party requester filed a second request for *inter partes* reexamination, assigned Control No. 95/001,802 (the '1802 proceeding). The request identified SmartDrive Systems Inc. (hereinafter "the requester") as the real party in interest.

4. On December 13, 2011, *inter partes* reexamination of the '376 patent was granted on all the claims of the '426 patent in the '1781 proceeding. An Office action was concurrently issued.

5. On January 6, 2012, *inter partes* reexamination of the '376 patent was granted on all the claims of the '426 patent in the '1802 proceeding. An Office action was concurrently issued.

6. On February 13, 2012, patent owner timely filed a response in the '1781 proceeding to the December 13, 2011 Office action, retaining all the original claims as issued and adding new claims 34-85.

7. On March 6, 2012, patent owner timely filed a response in the '1802 proceeding to the January 6, 2012 Office action, retaining all the original claims as issued and adding new claims 34-85, identical to those claims in the co-pending '1781 proceeding.

8. On March 14, 2012, the third party requester timely filed comments in the '1781 proceeding.

9. On April 5, 2012, the third party requester timely filed comments in the '1802 proceeding.

DECISION

I. MERGER OF PROCEEDINGS

Reexamination is ordered in the two above-captioned proceedings for the same claims of the same patent. Both proceedings are *inter partes* reexamination proceedings. Both proceedings are still pending, and have not been terminated. Therefore, consideration of merger is ripe at this point in time.

37 CFR 1.989 provides:

> (a) If any reexamination is ordered while a prior *inter partes* reexamination proceeding is pending for the same patent and prosecution in the prior *inter partes* reexamination proceeding has not been terminated, a decision may be made to merge the two proceedings or to suspend one of the two proceedings. Where merger is ordered, the merged examination will normally result in the issuance and publication of a single reexamination certificate under § 1.997.

The 95/001,781 and 95/001,802 *inter partes* proceedings are merged. The merged proceeding will be conducted in accordance with the guidelines and requirements that follow.

II. THE SAME CLAIMS MUST BE MAINTAINED IN ALL PROCEEDINGS

Presently, the claims (and specification) are identical in both files. Patent owner is required to continue to maintain the same claims (and specification) in both files *throughout the merged proceeding.*

III. CONDUCT OF MERGED PROCEEDING

A. Governing regulations for the merged proceeding:

The present decision merges two *inter partes* reexamination proceedings. Pursuant to 37 CFR 1.989(b), the merged proceeding is governed by 37 CFR §§ 1.902 through 1.997. Pursuant to 37 CFR 1.989(a), the merged examination will normally result in the issuance and publication of a single reexamination certificate under 37 CFR 1.997.

B. *Inter partes* Third Party Requester Participation:

In this instance, as the requester of each proceeding is the same real-party-in-interest, the merged proceeding will be conducted consistent with a proceeding that would have resulted from a single request.

Thus, the standard procedures for *inter partes* reexamination will apply and third party requester's comment rights and appeal rights will be consistent with the filing of a single request. That is, only one set of comments may be filed (where permitted) and the third party requester may file a single appeal treating the merged proceeding as a single proceeding containing all the issues raised in both proceedings.

C. Papers mailed/filed:

All papers mailed by the Office throughout the merged proceeding will take the form of a single action which applies to all proceedings. All papers issued by the Office, or filed by the patent owner and the third party requesters, will contain the identifying data for all proceedings and will be physically entered in each reexamination file. All papers filed by the patent owner and the third party requesters must consist of a single paper, **filed in duplicate**, each bearing a signature and identifying data for all files, for entry into each file.

Patent owner and requesters are reminded that every paper filed in the merged proceeding subsequent to this decision must be served on all the other parties, and every paper filed must reflect that such paper was served on all the other parties, pursuant to 37 CFR 1.903. All papers are to be addressed to the Central Reexamination Unit as provided above.

D. Fees:

Where a paper is filed that requires payment of a fee (*e.g.*, petition fee, excess claims fee, extension of time fee, appeal fee, brief fee, oral hearing fee), only a single fee need be paid. For example, only one fee need be paid for any patent owner's appellant brief (or that of an *inter partes* reexamination requester) which may be filed, even though the brief relates to merged

multiple proceedings, and copies must be filed (as pointed out above) for each file in the merged proceeding.

E. Citation of Patents and Printed Publications:

Upon return of the present merged proceeding to the examiner, the examiner will review the files to ensure that each file contains identical citations of prior patents and printed publications, and will cite such documents as are necessary as part of the next action in order to place the files in that condition.

CONCLUSION

1. *Inter partes* Reexamination Control Nos. 95/001,781 and 95/001,802 are merged into a single proceeding, to be conducted in accordance with the procedure set forth above in Part III of this decision.

2. Any questions concerning this communication should be directed to Joseph F. Weiss, Jr., Legal Advisor, at 571-272-7759.

Pinchus M. Laufer
Senior Legal Advisor
Office of Patent Legal Administration

UNITED STATES PATENT AND TRADEMARK OFFICE

UNITED STATES DEPARTMENT OF COMMERCE
United States Patent and Trademark Office
Address: COMMISSIONER FOR PATENTS
P.O. Box 1450
Alexandria, Virginia 22313-1450
www.uspto.gov

APPLICATION NO.	FILING DATE	FIRST NAMED INVENTOR	ATTORNEY DOCKET NO.	CONFIRMATION NO.
95/001,808	11/04/2011	Rui LI	11517.0022-00000	8433

87916 7590 04/04/2012

2nd Reexam Group - Novak Druce + Quigg LLP
1000 Louisiana Street
Fifty-Third Floor
Houston, TX 77002

EXAMINER	
ART UNIT	PAPER NUMBER

DATE MAILED: 04/04/2012

Please find below and/or attached an Office communication concerning this application or proceeding.

UNITED STATES PATENT AND TRADEMARK OFFICE

Commissioner for Patents
United States Patents and Trademark Office
P.O.Box 1450
Alexandria, VA 22313-1450
www.uspto.gov

DO NOT USE IN PALM PRINTER

THIRD PARTY REQUESTER'S CORRESPONDENCE ADDRESS
FINNEGAN, HENDERSON, FARABOW
GARRETT & DUNNER LLP
901 NEW YORK AVENUE, NW
WASHINGTON, DC 20001-4413

Date:
MAILED
APR 04 2012
CENTRAL REEXAMINATION UNIT

Transmittal of Communication to Third Party Requester
Inter Partes Reexamination

REEXAMINATION CONTROL NO. : 95001808
PATENT NO. : 7720977
TECHNOLOGY CENTER : 3999
ART UNIT : 3992

Enclosed is a copy of the latest communication from the United States Patent and Trademark Office in the above identified Reexamination proceeding. 37 CFR 1.903.

Prior to the filing of a Notice of Appeal, each time the patent owner responds to this communication, the third party requester of the inter partes reexamination may once file written comments within a period of 30 days from the date of service of the patent owner's response. This 30-day time period is statutory (35 U.S.C. 314(b)(2)), and, as such, it cannot be extended. See also 37 CFR 1.947.

If an ex parte reexamination has been merged with the inter partes reexamination, no responsive submission by any ex parte third party requester is permitted.

All correspondence relating to this inter partes reexamination proceeding should be directed to the Central Reexamination Unit at the mail, FAX, or hand-carry addresses given at the end of the communication enclosed with this transmittal.

UNITED STATES PATENT AND TRADEMARK OFFICE

Commissioner for Patents
United States Patent and Trademark Office
P.O. Box 1450
Alexandria, VA 22313-1450
www.uspto.gov

MAILED

APR 04 2012

CENTRAL REEXAMINATION UN

NOVAK DRUCE + QUIGG, LLP
1000 LUISIANA STREET
53RD FLOOR
HOUSTON, TEXAS 77002

(For Patent Owner)

FINNEGAN, HENDERSON, FARABOW,
GARRET & DUNNER, LLP
901 NEW YORK AVENUE, NW
WASHINGTON, DC 20001-4413

(For Third-Party Requester)

Inter Partes Reexamination Proceeding
Control No. 95/001,808
Request Deposited: November 4, 2011
For: U.S. Patent No.7,720,977

: **DECISION**
: **DISMISSING**
: **PETITION**
: **AS MOOT**

This is a decision on patent owner's February 16, 2012 petition entitled "Patent Owner's Petition Under 37 CFR § 1.182 To Temporarily Suspend Reexamination For Good Cause" (the petition under 37 CFR 1.182), requesting that the Office suspend the instant reexamination proceeding until the Director issues a decision on the concurrently-filed "Patent Owner's Petition Under 37 CFR § 1.181(A)(3) to Vacate Order Granting Reexamination as Ultra Vires" (the petition under 37 CFR 1.181). The petition under 37 CFR 1.182 is before the Office of Patent Legal Administration.

In light of the decision issued by the Central Reexamination Unit (CRU) on even date herewith, dismissing patent owner's February 16, 2012 petition under 37 CFR 1.181, the instant petition under 37 CFR 1.182 is dismissed as moot.

Pinchus M. Laufer
Senior Legal Advisor
Office of Patent Legal Administration

04-04-2012

UNITED STATES PATENT AND TRADEMARK OFFICE

UNITED STATES DEPARTMENT OF COMMERCE
United States Patent and Trademark Office
Address: COMMISSIONER FOR PATENTS
P.O. Box 1450
Alexandria, Virginia 22313-1450
www.uspto.gov

APPLICATION NO.	FILING DATE	FIRST NAMED INVENTOR	ATTORNEY DOCKET NO.	CONFIRMATION NO.
95/001,808	11/04/2011	Rui LI	11517.0022-00000	8433

87916 7590 04/04/2012

2nd Reexam Group - Novak Druce + Quigg LLP
1000 Louisiana Street
Fifty-Third Floor
Houston, TX 77002

EXAMINER	
ART UNIT	PAPER NUMBER

DATE MAILED: 04/04/2012

Please find below and/or attached an Office communication concerning this application or proceeding.

UNITED STATES PATENT AND TRADEMARK OFFICE

Commissioner for Patents
United States Patents and Trademark Office
P.O.Box 1450
Alexandria, VA 22313-1450
www.uspto.gov

DO NOT USE IN PALM PRINTER

THIRD PARTY REQUESTER'S CORRESPONDENCE ADDRESS

FINNEGAN, HENDERSON, FARABOW
GARRETT & DUNNER LLP
901 NEW YORK AVENUE, NW
WASHINGTON, DC 20001-4413

Date:

MAILED

APR 04 2012

CENTRAL REEXAMINATION UNIT

Transmittal of Communication to Third Party Requester
Inter Partes Reexamination

REEXAMINATION CONTROL NO. : 95001808
PATENT NO. : 7720977
TECHNOLOGY CENTER : 3999
ART UNIT : 3992

Enclosed is a copy of the latest communication from the United States Patent and Trademark Office in the above identified Reexamination proceeding. 37 CFR 1.903.

Prior to the filing of a Notice of Appeal, each time the patent owner responds to this communication, the third party requester of the inter partes reexamination may once file written comments within a period of 30 days from the date of service of the patent owner's response. This 30-day time period is statutory (35 U.S.C. 314(b)(2)), and, as such, it cannot be extended. See also 37 CFR 1.947.

If an ex parte reexamination has been merged with the inter partes reexamination, no responsive submission by any ex parte third party requester is permitted.

All correspondence relating to this inter partes reexamination proceeding should be directed to the Central Reexamination Unit at the mail, FAX, or hand-carry addresses given at the end of the communication enclosed with this transmittal.

UNITED STATES PATENT AND TRADEMARK OFFICE

COMMISSIONER FOR PATENTS
UNITED STATES PATENT AND TRADEMARK OFFICE
P.O. BOX 1450
ALEXANDRIA, VA 22313-1450
www.uspto.gov

MAILED

APR 04 2012

CENTRAL REEXAMINATION UNIT

NOVAK DRUCE + QUIGG, LLP : (For Patent Owner)
1000 LUISIANA STREET :
53RD FLOOR :
HOUSTON, TEXAS 77002 :

FINNEGAN, HENDERSON, FARABOW, : (For Third-Party Requester)
GARRET & DUNNER, LLP :
901 NEW YORK AVENUE, NW :
WASHINGTON, DC 20001-4413 :

In re Li : DECISION ON
Reexamination Proceeding : PETITION TO VACATE ORDER
Control No. 95/001808 : GRANTING *INTER PARTES*
Request Deposited: November 4, 2011 : REEXAMINATION
For: U.S. Patent No.7,720,977 : AS ULTRA VIRES

This is a decision on the patent owner petition under 37 CFR 1.181(a)(3) filed on February 16, 2012 by which Patent Owner requests the Order Granting the Request for reexamination of claims 1-25 of US Patent No 7,720,977 be vacated as an *ultra vires* act and on requester's opposition thereto filed March 2, 2012.

The patent owner petition is **DISMISSED** for the reasons set forth below.

REVIEW OF RELEVANT FACTS

1. On November 4, 2011, a request for *inter partes* reexamination of all of the claims (claims 1-25) of U.S. Patent No 7,720,977 to Li was filed by a third party requester. The real party of interest was identified as A10 Networks, Inc. The request was assigned Control no. 95/001,808 ("the '1808 proceeding").

2. On December 16, 2011, the Office issued an order granting the '1808 request for inter partes reexamination of claims 1-25. The Office also issued a first Office action on the merits on the same day.

3. On February 16, 2012, patent owner submitted a response to the first Office action of December 16, 2011. On the same day, patent owner also filed a petition entitled "PATENT OWNER'S PETITION UNDER 37 CFR § 1.181(A)(3) TO VACATE ORDER GRANTING REEXAMINATION AS ULTRA VIRES," the subject of this instant decision.

4. On March 2, 2012, third party requester filed an opposition to the patent owner's petition (of February 16, 2012) to vacate the order granting reexamination.

APPLICABLE STATUE(S) AND RULE(S)

35 U.S.C. § 312 provides

> (a) REEXAMINATION. – Not later than 3 months after the filing of a request for inter parted reexamination under section 311, the Director shall determine whether the information presented in the request shows that there is a reasonable likelihood that the requester would prevail with respect to at least 1 of the claims challenged in the request, with or without consideration of other patents or printed publications. A showing that there is a reasonable likelihood that the requester would prevail with respect to at least 1 of the claims challenged in the request is not precluded by the fact that a patent or printed publication was previously cited by or to the Office or considered by the Office. (Emphasis added.)

35 U.S.C. § 313 provides

> If, in a determination made under section 312(a), the Director finds that it has been shown that there is a reasonable likelihood that the requester would prevail with respect to at least 1 of the claims challenged in the request, the determination shall include an order for inter partes reexamination of the patent for resolution of the question. The order may be accompanied by the initial action of the Patent and Trademark Office on the merits of the inter partes reexamination conducted in accordance with section 314.

37 C.F.R. § 1.915(b)(3) provides

> A statement pointing out, based on the cited patents and printed publications, each showing of a reasonable likelihood that the requester

will prevail with respect to at least one of the claims challenged in the request, and a detailed explanation of the pertinency and manner of applying the patents and printed publications to every claim for which reexamination is requested.

37 C.F.R. § 1.923 provides

Within three months following the filing date of a request for *inter partes* reexamination under 1.915, the examiner will consider the request and determine whether or not the request and the prior art establish a reasonable likelihood that the requester will prevail with respect to at least one of the claims challenged in the request. The examiner's determination will be based on the claims in effect at the time of the determinations, will become a part of the official file of the patent, and will be mailed to the patent owner at the address as provided in 1.33(c) and to the third party requester. If the examiner determines that the request has not established a reasonable likelihood that the requester will prevail with respect to at least one of the challenged claims, the examiner shall refuse the request and shall not order *inter partes* reexamination.

37 C.F.R. § 1.931 provides

(a) If it is found that there is a reasonable likelihood that the requester will prevail with respect to at least one of the claims challenged in the request, the determination will include an order for inter partes reexamination of the patent for resolution of the question of whether the requester will prevail.

DECISION

Patent owner petitions under 37 C.F.R § 1.181(a)(3) to vacate the Order granting reexamination mailed on December 16, 201 as an *ultra vires* act. Petitioner asserts that the Office does not have jurisdiction to initiate or continue this reexamination because, according to patent owner, the rejections proposed by the request for reexamination rely on the exact same technological teaching as was expressly considered in the original prosecution and are overcome for the exact same reasons.

Patent owner relies on MPEP § 2616 that discusses the requirement for the request to include "a statement pointing out each substantial question of patentability ..." under 37 C.F.R. § 1.915(b)(3) to make the argument that because there is no new technological teaching presented in the request the Office had no discretion to order the reexamination. Under the "substantial new question of patentability" (SNQ) standard, a request must present a question of patentability that is substantially different from those raised in the previous examination of the patent before

the Office. Patent owner reasons that since the request was filed after the recent enactment of the America Invents Act of 2011 which "elevated" the threshold for determining whether there should be an order granting the request for reexamination from the SNQ standard to the "reasonable likelihood to prevail" (RLP) standard, the request should fail because it does not pass the SNQ threshold which is lower that the RLP threshold.

Patent owner's reliance on the SNQ section of MPEP is misplaced. As patent owner noted, for *inter partes* reexamination the SNQ standard has been replaced with the RLP standard. The relevant rules of practice have been revised accordingly and are reproduced above. (See "Revision of Standard for Granting an Inter Partes Reexamination Request", 76 Fed. Reg. 185 September 23, 2011.) Whether the issue being brought forth for consideration has been addressed in a previous Office proceeding does not preclude reexamination under the current standard for ordering *inter partes* reexamination. Under 35 U.S.C. § 312 the Office now has the discretion to reconsider issues that have been addressed in the past, provided the estoppel provisions of 35 U.S.C. 317 do not apply. The determination of whether the questions presented in the request are new is no longer a prerequisite to the determination of whether to order *inter partes* reexamination.[1]

Accordingly, patent owner's petition does not demonstrate that the granting of *inter partes* reexamination was *ultra vires*. Accordingly, the petition is dismissed.

CONCLUSION

1. Petitioner's request to vacate the reexamination is **dismissed.**

2. Telephone inquiries related to this decision should be directed to Alexander Kosowski, at (571) 272-3744, Mark Reinhart, at (571) 272-1611 or Sudhanshu Pathak at (571) 272-5509.

Irem Yucel
Director, Central Reexamination Unit

[1] Accordingly, this decision does not address the arguments in requester's opposition that the issues raised are new because such determination is not relevant to deciding this petition.

UNITED STATES PATENT AND TRADEMARK OFFICE

UNITED STATES DEPARTMENT OF COMMERCE
United States Patent and Trademark Office
Address: COMMISSIONER FOR PATENTS
P.O. Box 1450
Alexandria, Virginia 22313-1450
www.uspto.gov

APPLICATION NO.	FILING DATE	FIRST NAMED INVENTOR	ATTORNEY DOCKET NO.	CONFIRMATION NO.
95/001,809	11/07/2011	7251776		6452

26486 7590 02/24/2012

BURNS & LEVINSON, LLP
125 SUMMER STREET
BOSTON, MA 02110

EXAMINER	
ART UNIT	PAPER NUMBER

DATE MAILED: 02/24/2012

Please find below and/or attached an Office communication concerning this application or proceeding.

UNITED STATES PATENT AND TRADEMARK OFFICE

Commissioner for Patents
United States Patent and Trademark Office
P.O. Box 1450
Alexandria, VA 22313-1450
www.uspto.gov

BURNS & LEVINSON, LLP
125 SUMMER STREET
BOSTON, MA 02110

(For Patent Owner)

MAILED

FEB 24 2012

JOHN D. VANDENBERG
KLARQUIST SPARKMAN, LLP
121 SW SALMON STREET, SUITE 1600
PORTLAND, OR 97204

(For Third Party Requester)

CENTRAL REEXAMINATION UNIT

In re Handsaker et al.
Inter Partes Reexamination Proceeding
Control No.: 95/001,809
Filing Date: November 7, 2011
For: U.S. Patent No. 7,251,776 B2

: **DECISION**
: **DISMISSING**
: **PETITION**
: **AND EXPUNGING**
: **IMPROPER PAPER**

This is a decision on the December 2, 2011 patent owner petition entitled "Petition Pursuant to 37 C.F.R. § 1.182 or §1.183," requesting that the Office consider its preliminary response to the request under the new "reasonable likelihood" threshold that was made effective immediately by the Leahy-Smith American Invents Act.

The present petition is before the Office of Patent Legal Administration. This decision *sua sponte* waives 37 CFR 1.939(b) to the extent the present petition is being considered on its merits.

For the reasons set forth below, the present petition is **dismissed.**

PERTINENT BACKGROUND

1. On July 31, 2007, U.S. Patent No. 7,251,776 B2 ("the '776 patent") was issued to Handsaker *et al.*, with claims 1-34.

2. On November 7, 2011, a request for *inter partes* reexamination was filed by a third party requester, identifying Microsoft Corporation as the real party in interest, and the resulting reexamination proceeding was assigned control number 95/001,809 ("the '809 proceeding").

3. On December 2, 2011, the patent owner filed the instant petition entitled "Petition Pursuant to 37 C.F.R. § 1.182 or §1.183."

4. On January 26, 2012, reexamination was ordered for claims 1-8, 10, 18, 22, 23, 26, and 30 of the '776 patent. On the same date, an Office action was mailed rejecting claims 1-8, 10, 18, 22, 23, 26, and 30.

DECISION

In the present petition, the patent owner requests relief either under 37 CFR 1.182 or 37 CFR 1.183, to permit the patent owner to submit a preliminary response to the request prior to the Office's determination under 35 U.S.C. 312.[1] Specifically, the patent owner contends that it has a right to file a preliminary response (included as section 3 of the instant petition) that is in keeping with the language in the new threshold provisions.[2] Finally, the patent owner requests that the Office consider the district court's claim construction in the copending litigation in order to be informed of the proper threshold determination.[3] The patent owner argues that the elimination of 35 U.S.C. 132 and 133 and "broadest reasonable construction" language from the enacted *inter partes* review requires consideration of the patent owner's filings in pending and past litigation in order to properly apply the "reasonable likelihood" threshold for ordering reexamination.[4]

Patent owner's request is predicated on a mistaken conception of the applicable statutory scheme governing the '809 proceeding, as it relies on provisions of the new *inter partes* review statute that does not take effect until September 16, 2012. The '776 patent is currently under *inter partes* reexamination, not *inter partes* review. As set forth in current 35 U.S.C. 314, an *inter partes* reexamination, ordered pursuant to 35 U.S.C. 313, shall be conducted according to the procedures established for initial examination under 35 U.S.C. 132 and 133.

The text of current 35 U.S.C. 313 has not been amended to provide for a patent owner's right to file a preliminary response to a request for *inter partes* reexamination. Rather, § 6(c)(3)(A) of the Leahy-Smith America Invents Act amended 35 U.S.C. 312 and 313 to delete any reference to the substantial new question of patentability standard, and provide, in place of each deletion, language requiring the information presented in a request for *inter partes* reexamination (filed pursuant to 35 U.S.C. 311) to show that there is reasonable likelihood that the requester will prevail with respect to at least one of the claims challenged in the request.[5]

The preliminary patent owner response rebutting the request is not a paper that is permitted by the current statute governing *inter partes* reexamination proceedings; therefore, the preliminary patent owner response is not enterable into the record and is an improper paper.

Accordingly, the present patent owner petition, requesting entry of the preliminary patent owner response, is dismissed.

---

[1] Petition at pages 2-3.
[2] *Id.* at page 4.
[3] *Id.* at page 2.
[4] *Id.* at pages 5-6.
[5] *Leahy-Smith America Invents Act*, Pub. L. no. 112-29, 125 Stat 305 (2011). On September 23, 2011, the Office implemented the new standard for granting an *inter partes* reexamination request filed on or after September 16, 2011, but before September 16, 2012, in a final rule. *See Revision of Standard for Granting an Inter Partes Reexamination Request*; Final Rule, 76 Fed. Reg. 59055 (September 23, 2011).

Pursuant to 37 CFR 1.939(a), "[i]f an unauthorized paper is filed by any party at any time during the *inter partes* reexamination proceeding it will not be considered and may be returned." For the reasons discussed above, the patent owner's preliminary response that is incorporated into the instant petition does not have a right of entry into the record of the '809 proceeding and, as such, is not an authorized paper. Accordingly, the instant patent owner petition, which includes the improper preliminary patent owner response, is being expunged from the record of the '809 proceeding. Because the patent owner's December 2, 2011 petition, which includes the improper preliminary patent owner response, has been scanned into the electronic Image File Wrapper (IFW), the paper is being expunged by marking it "closed" and "non-public" in the IFW, and will not constitute part of the record of the '809 proceeding.[6]

CONCLUSION

1. The December 2, 2011 patent owner petition is **dismissed**. Furthermore, the patent owner petition, which includes the preliminary patent owner response, is an improper paper and is refused entry.

2. Because the December 2, 2011 patent owner petition was previously incorporated into the IFW, the paper is being expunged from the record by marking it "closed" and "non-public" in the IFW of the '809 proceeding. No copy of the December 2, 2011 patent owner petition will be maintained of record in the Office.

3. A copy of this decision will be made of record in the IFW record of the '809 proceeding.

4. Any inquiry concerning this communication should be directed to Susy Tsang-Foster, Legal Advisor, at (571) 272-7711 or, in her absence, to the undersigned at (571) 272-7726.

Pinchus M. Laufer
Senior Legal Advisor
Office of Patent Legal Administration

02-24-2012

[6] *See* MPEP 2267.

UNITED STATES PATENT AND TRADEMARK OFFICE

UNITED STATES DEPARTMENT OF COMMERCE
United States Patent and Trademark Office
Address: COMMISSIONER FOR PATENTS
P.O. Box 1450
Alexandria, Virginia 22313-1450
www.uspto.gov

APPLICATION NO.	FILING DATE	FIRST NAMED INVENTOR	ATTORNEY DOCKET NO.	CONFIRMATION NO.
95/001,813	11/17/2011	8,052,342	71189-3307	1308

23628 7590 03/07/2012

WOLF GREENFIELD & SACKS, P.C.
600 ATLANTIC AVENUE
BOSTON, MA 02210-2206

EXAMINER	
ART UNIT	PAPER NUMBER

DATE MAILED: 03/07/2012

Please find below and/or attached an Office communication concerning this application or proceeding.

UNITED STATES PATENT AND TRADEMARK OFFICE

Commissioner for Patents
United States Patents and Trademark Office
P.O.Box 1450
Alexandria, VA 22313-1450
www.uspto.gov

DO NOT USE IN PALM PRINTER

THIRD PARTY REQUESTER'S CORRESPONDENCE ADDRESS
MCGARRY BAIR PC
32 MARKET AVE. SW
SUITE 500
GRAND RAPIDS, MI 49503

Date:
MAILED
MAR 07 2012
CENTRAL REEXAMINATION UNIT

Transmittal of Communication to Third Party Requester
Inter Partes Reexamination

REEXAMINATION CONTROL NO. : 95001813
PATENT NO. : 8052342
TECHNOLOGY CENTER : 3999
ART UNIT : 3993

Enclosed is a copy of the latest communication from the United States Patent and Trademark Office in the above identified Reexamination proceeding. 37 CFR 1.903.

Prior to the filing of a Notice of Appeal, each time the patent owner responds to this communication, the third party requester of the inter partes reexamination may once file written comments within a period of 30 days from the date of service of the patent owner's response. This 30-day time period is statutory (35 U.S.C. 314(b)(2)), and, as such, it cannot be extended. See also 37 CFR 1.947.

If an ex parte reexamination has been merged with the inter partes reexamination, no responsive submission by any ex parte third party requester is permitted.

All correspondence relating to this inter partes reexamination proceeding should be directed to the Central Reexamination Unit at the mail, FAX, or hand-carry addresses given at the end of the communication enclosed with this transmittal.

UNITED STATES PATENT AND TRADEMARK OFFICE

Commissioner for Patents
United States Patent and Trademark Office
P.O. Box 1450
Alexandria, VA 22313-1450
www.uspto.gov

WOLF GREENFIELD & SACKS. P.C
600 ATLANTIC AVENUE
BOSTON, MA 02210-2206

(For Patent Owner)

MAILED

MAR 07 2012

CENTRAL REEXAMINATION UNIT

MCGARRY BAIR PC
32 MARKET AVE. SW
SUITE 500
GRAND RAPIDS, MI 49503

(For Third Party Requester)

In re Rosenzweig et al.
Inter Partes Reexamination Proceeding
Control No. 95/001,813
Filed: November 17, 2011
For: U.S. Patent No. 8,052,342

: DECISION ON
: PETITION UNDER
: 37 CFR 1.181 &
: 1.927

Third party requester filed a paper on January 14, 2012, entitled "Petition Pursuant to 37 C.F.R. §§ 1.927 and 1.181 for Review the Order Denying Request for Inter Partes Reexamination of U.S. Patent No. 8,052,342" (hereinafter "the petition"). The petition is before the Director of the Central Reexamination Unit (CRU). Petitioner, the reexamination requester, seeks supervisory review of the Determination Denying the Request for *Inter Partes* Reexamination, which was mailed on December 16, 2011.

The petition is **DENIED** for the reasons set forth below.

REVIEW OF RELEVANT FACTS

1. U.S. Patent No. 8,052,342 ("the '342 patent") issued on November 8, 2011.

2. A corrected request for *inter partes* reexamination was filed on November 17, 2011 for claims 1-22 of the '342 patent. The reexamination proceeding was assigned Control No. 95/001,813 (hereinafter, the '813 proceeding).

3. A determination denying the request for reexamination of claims 1-22 of the '342 patent was mailed on December 16, 2011 in the '813 proceeding.

4. The instant petition was filed on January 14, 2012.

Petitioner's Grounds in Support of the Requested Relief

Petitioner alleges that the denial of the request for reexamination is improper and questions whether the determination refusing reexamination correctly (1) found the proper level of skill in the art; (2) found the proper scope and content of the prior art; (3) applied the requester's proposed rejections; (4) used the broadest reasonable interpretation; and (5) used the proper application of the reasonable likelihood of prevailing (RLP) standard. See, e.g., pages 5-6 of the petition. This decision will address these five issues raised by the petition.

DECISION

I. Standard of Review

35 USC 312(c) and 37 CFR 1.927 provide for the filing of a petition to review an examiner's determination refusing to order *inter partes* reexamination. The CRU Director's review on petition is *de novo*. Therefore, the review will determine whether the examiner's refusal to order reexamination for claims 1-22 was correct, and will not necessarily indicate agreement or disagreement with every aspect of the examiner's rationale for the denial of the request to order reexamination for claims 1-22 of the '342 patent. The review will not consider evidence not of record at the time of the request for reexamination (e.g., evidence made of record for the first time in the petition) or issues not specifically raised by the petition.

II. Relevant Regulations for *Inter Partes* Reexamination

37 C.F.R. § 1.913 states in part:

> (a) Except as provided for in § 1.907 and in paragraph (b) of this section, any person other than the patent owner or its privies may, at any time during the period of enforceability of a patent which issued from an original application filed in the United States on or after November 29,

1999, file a request for *inter partes* reexamination by the Office of any claim of the patent on the basis of prior art patents or printed publications cited under § 1.501.

37 C.F.R. § 1.915(b) states in part:

(3) A statement pointing out, based on the cited patents and printed publications, each showing of a reasonable likelihood that the requester will prevail with respect to at least one of the claims challenged in the request, and a detailed explanation of the pertinency and manner of applying the patents and printed publications to every claim for which reexamination is requested.

37 C.F.R. § 1.923 states:

Within three months following the filing date of a request for *inter partes* reexamination under § 1.915, the examiner will consider the request and determine whether or not the request and the prior art establish a reasonable likelihood that the requester will prevail with respect to at least one of the claims challenged in the request. The examiner's determination will be based on the claims in effect at the time of the determination, will become a part of the official file of the patent, and will be mailed to the patent owner at the address as provided for in § 1.33(c) and to the third party requester. If the examiner determines that the request has not established a reasonable likelihood that the requester will prevail with respect to at least one of the challenged claims, the examiner shall refuse the request and shall not order *inter partes* reexamination.

37 C.F.R. § 1.927 states:

The third party requester may seek review by a petition to the Director under § 1.181 within one month of the mailing date of the examiner's determination refusing to order *inter partes* reexamination. Any such petition must comply with § 1.181(b). If no petition is timely filed or if the decision on petition affirms that a reasonable likelihood that the requester will prevail with respect to at least one of the claims challenged in the request has not been established, the determination shall be final and nonappealable.

37 C.F.R. § 1.931(a) states:

If it is found that there is a reasonable likelihood that the requester will prevail with respect to at least one of the claims challenged in the request, the determination will include an order for *inter partes* reexamination of the patent for resolution of the question of whether the requester will prevail.

III. The Legal Standard for Ordering Reexamination

A review of 35 USC 311-317 and 37 CFR 1.915, 1.919, and 1.923, after implementation of the Leahy-Smith America Invents Act[1], shows that *inter partes* reexamination of a United States Patent is only authorized when a consideration of prior art consisting of patents or printed publications establishes that there is a reasonable likelihood that the requester will prevail with

[1] Public Law 112-29, 125 Stat. 284 (2011).

respect to at least one of the claims challenged in the request. In particular, 35 USC 311(a) requires that a request for *inter partes* reexamination be based upon prior art as set forth in 35 USC 301, that is, prior art consisting of patents or printed publications, while 37 CFR 1.915(b)(3) requires that a request for *inter partes* reexamination include "a statement ... showing that there is a reasonable likelihood that the requester will prevail with respect to at least one of the claims challenged in the request."

Section 6(c)(3)(A) of the Leahy-Smith America Invents Act amended 35 USC 312 and 313 to delete any reference to the SNQ standard, and provide, in place of each deletion, language requiring the information presented in a request for *inter partes* reexamination (filed pursuant to 35 USC 311) to show that there is a reasonable likelihood that the requester will prevail with respect to at least one of the claims challenged in the request. With respect to the reasonable likelihood standard, House Rep. 112–98 (Part 1), 112th Cong., 1st Sess., provides, in connection with *inter partes* review, the following:

> ''The threshold for initiating an inter partes review is elevated from 'significant new question of patentability'—a standard that currently allows 95% of all requests to be granted—to a standard requiring petitioners to present information showing that their challenge has a reasonable likelihood of success.'' H.R. Rep. No. 112–98 (Part 1), at 47.

Similarly, with respect to the reasonable likelihood standard, a Senate debate in the Congressional Record at S1375 (March 8, 2011), 112th Cong., 1st Sess., provides, in connection with *inter partes* review, the following:

> ''Among the most important protections for patent owners added by the present bill are its elevated thresholds for instituting inter partes and post-grant reviews. The present bill dispenses with the test of ''substantial new question of patentability,'' a standard that currently allows 95% of all requests to be granted. It instead imposes thresholds that require petitioners to present information that creates serious doubts about the patent's validity. ...
>
> ...The ''reasonable likelihood'' test is currently used in evaluating whether a party is entitled to a preliminary injunction, and effectively requires the petitioner to present a prima facie case justifying a rejection of the claims in the patent.''

To implement this change to the standard of granting an *inter partes* reexamination request, the Office revised the rules of practice for *inter partes* reexamination by amending 37 CFR 1.915, 1.923, 1.927, and 1.931 to delete any reference to the SNQ standard for granting reexamination, and insert in its place reference to the newly enacted ''reasonable likelihood'' standard. See "Revision of Standard for Granting an Inter Partes Reexamination Request: Final Rule," 76 Fed. Reg. 59055 (Sept. 23, 2011). The relevant regulations, as amended, appear in subsection II.

IV. Analysis of the Request for Reexamination of the '342 patent

The Request in the instant proceeding sets forth the following proposed rejections:

1. Claims 1, 2, and 4-22 are obvious over Chinese Patent Document No. 2482956 ("Wu") in view of U.S. Patent Application Publication No. 2005/0091775 ("Lindholm")
2. Claims 1-4, 7, and 19-22 are obvious over Wu in view of Lindholm, and further in view of GB Patent Document No. 281,538 ("Potter").
3. Claims 5, 8-9, 11-15, and 18 are obvious over U.S. Patent Application Publication No. 2006/0000049 ("Rosenzweig") in view of Lindholm.
4. Claims 5, 8-10, 12-15, and 18 are obvious over Rosenzweig in view of U.S. Patent No. 5,455,980 ("Buchanan").
5. Claims 5, 8-9, 11-15, and 18 are obvious over Rosenzweig in view of Chinese Patent Document No. 2549888 Y ("Zhang").
6. Claims 5, 8-9, 11-15, and 18 are obvious over Rosenzweig view of DE Patent Document No. G 94 15 002.8 U1 ("Vileda").
7. Claims 5, 8, 10-12, 14-16, and 18 are obvious over BISSELL Steam Map TM User's Guide, 2002 ("BISSELL '02") in view of Lindholm.
8. Claims 5, 8, 11, 12, and 16-18 are obvious over BISSELL '02 in view of Potter.
9. Claims 5, 8, 11, 12, and 16-18 are obvious over BISSELL Steam Map TM User's Guide, 2007 ("BISSELL '07") in view of Potter.
10. Claim 5 is anticipated by GB Patent Document No. 2 294 196 A ("Jacques").
11. Claim 5 is obvious over Jacques.

The request for *inter partes* reexamination was denied in the December 16, 2011 determination. In summary, the examiner found that the proposed combination of references would either render the primary reference inoperable or failed to teach to claim limitations and that the Jacques reference failed to teach all the limitations of claim 5 under both anticipation and obviousness analysis.

The petition raised five general issues, as indicated above, instead of framing issues on the basis of the proposed rejections. Therefore, this decision will follow the format established by the petition to address each of the five issues raised by the petition, and will only address the proposed rejections discussed in the petition in detail.

1. Did the determination use the proper level of skill in the art in the analysis?

Petitioner argues that the RLP analysis did not account for the level of ordinary skill in the art. See pages 6-8 of the petition. Specifically, petitioner advances that the RLP analysis only addresses the "wholesale replacement" of the universal connector from the secondary reference into the primary reference and fails to account for the ordinary skill in the art. Petitioner advances that a mechanical engineer with a typical level of experience in the art would be able to modify the connector without destroying the steam conduit function. Petitioner explains his position with regard to the first proposed rejection as applied to claims 1 and 5, and concludes that the argument applies to the third, fourth, and seventh above-mentioned proposed rejections as applied to claim 5. See page 8 of the petition.

Upon review of the record, the RLP analysis addressed the combination of references as presented in the request and did not ignore the level of ordinary skill in the art. For example, for the first proposed rejection based on Wu in view of Lindholm, the determination includes a detailed analysis based upon modifying the Wu connector to include the two pairs of pivot plates that are pivotally connected, as suggested by the request on pages 23-25 and 26-27. See pages 4-6 of the determination. For claim 1, page 24 of the request states:

> "It would have been obvious to one of ordinary skill in the art to modify the Wu '956 connector 11 to attach the two connector pieces 20, 40 together using pivot plates on each piece because similar pivot plate couplings are well known in the art of universal connectors, as taught by Lindholm '775, and because all of the component parts were known in the floor care prior art, and it would have been nothing more than a common sense, simple substitution of one known element, i.e. the universal connector 11 in Wu '956 for the universal connector 16 of Lindholm '775. See, e.g., KSR Int'l Co. v. Teleflex, Inc., 550 U.S. 398 (2007)."

The detailed explanation provided in the request does not address what is the ordinary skill in the art and fails to explain how the steam conduit would function, as required, if Wu's connector is modified to use the pivot plates taught by Lindholm. See pages 23-25 of the request. For claim 5, the request also concludes that it would be obvious to modify Wu's connector to pivot side-to-side as taught by Lindholm to increase the range of motion between the frame and the housing. See pages 27-28 of the request. This detailed explanation also fails to explicitly address what is the ordinary skill in the art and fails to explain how the steam conduit would function as required if Wu's connector is modified by Lindholm. The RLP analysis on pages 4-6 of the determination is consistent with the modification suggested in the request. It did not include a wholesale replacement or treated one of ordinary skill as an "automaton," as alluded to by the petitioner. Instead, the determination provided a reasoned analysis of why Wu's device would become inoperable if modified as suggested by the request. If a proposed modification would render the prior art invention being modified unsatisfactory for its intended purpose, then there is no suggestion or motivation to make the proposed modification. *In re Gordon*, 733 F.2d 900, 221 USPQ 1125 (Fed. Cir. 1984). In addition, a statement that modifications of the prior art to meet the claimed invention would have been "'well within the ordinary skill of the art at the time the claimed invention was made'" because the references relied upon teach that all aspects of the claimed invention were individually known in the art is not sufficient to establish a *prima facie* case of obviousness without some objective reason to combine the teachings of the references. *Ex parte Levengood*, 28 USPQ2d 1300 (Bd. Pat. App. & Inter. 1993).

Section 6(c)(3)(A) of the Leahy-Smith America Invents Act provides a provision under which a request for *inter partes* reexamination will not be granted unless the information presented in the request shows that there is a reasonable likelihood that the requester will prevail with respect to at least one of the claims challenged in the request. The requirement that the request must present a reasonable likelihood of prevailing (RLP) on at least one claim places the initial burden of proof on the requester. For the reasons states above, the record does not support that the request met this burden, e.g., made a sufficient showing of unpatentability to the extent that there was a reasonable likelihood of prevailing for at least one patent claim. Therefore, upon review of the record, the determination did not ignore the level of skill in the art and correctly found, after a reasoned analysis, that the proposed rejections explained in the request failed to show a reasonable likelihood of prevailing as to any of the patent claims.

2. Did the determination use the proper scope and content of the prior art in the analysis?

Petitioner argues that the RLP analysis did not properly consider the full scope and content of the prior art. See pages 8-13 of the petition. Specifically, petitioner advances that the RLP analysis failed to account for Wu's teachings on how the steam conduit can be routed through the connector. Similar to the arguments in the first issue, petitioner advances that the determination limited its analysis to just the "simple substitution" rationale for obviousness and failed to recognize other rationales, such as using a known technique for universal pivotal motion to improve a similar device. In the petition, petitioner presented new arguments contending how the connector can be modified and still retain the steam conduit functionality. See pages 10-13 of the petition. Petitioner uses this additional analysis to argue that the examiner erred in the determination.

As stated above, petitioner cannot introduce new evidence to establish that the examiner erred in the determination, e.g., effectively bootstrap new arguments into being "new evidence" to establish a reasonable likelihood of prevailing in the request for reexamination in the '813 proceeding. The requirement that the *request* must present a reasonable likelihood of prevailing (RLP) on at least one claim places the initial burden of proof on the requester to present a complete explanation in the request. The CRU Director's *de novo* review is based upon the record at the time the examiner made the determination. Therefore, this decision will not specifically address newly raised obviousness analysis that was not present in the request for reexamination.

Upon review of the record, the RLP analysis addressed the combination of references as presented in the request and did not ignore the full scope and content of the prior art. As explained above in regard to the first issue, the determination included a well-reasoned analysis of why device of the primary reference (e.g., Wu's device) would become inoperable if modified as suggested in the request. A modification that would result in the prior art device being inoperable is sufficient basis to conclude that the request failed to show a reasonable likelihood of prevailing on at least one claim. Petitioner attempts to show error in the determination by alleging that the examiner did not perform a complete obviousness analysis. However, petitioner's arguments miss the mark. As stated above, the initial burden to provide a RLP is on the requester and not the examiner. In other words, petitioner's argument that the examiner failed to supplement the obviousness analysis by considering issues not presented in the request is not persuasive. As explained in regard to the first issue, the explanation of the proposed rejections failed to address how the primary device would operate if modified as suggested. The analysis performed in the determination addressed the proposed rejections, as presented in the request, and made a finding that the device would be inoperable if modified as suggested. Upon review of the record, the determination's analysis was consistent with the full scope and content of the prior art. The examiner recognized that Wu, Rosenzweig, and BISSELL '02 taught how a steam conduit can be routed through a connector. See, e.g., pages 6, 8, and 10-12 of the determination. For example, the examiner recognized that if the pivot plates of Lindholm's connector were substituted into Wu's connector or were used to modify Wu's connector, the

result would be that the connector could no longer accommodate the steam conduit as taught by Wu. Similar findings were made for the proposed rejections based on Rosenzweig and BISSELL '02. These findings are not based on the fact that the full scope of the primary reference's teachings was ignored, but is based on the ramifications that would flow from the suggested modification. These findings are also not based on lack of consideration of additional obviousness rationales. In other words, the finding of inoperability as a result of the combination would not be overcome by any of the obviousness rationales stated in the MPEP. For these reasons, petitioner's arguments are not persuasive.

In addition, petitioner presented new arguments contending that Potter teaches how a conduit can be routed through a connector and contends that the examiner failed to consider such teachings in his analysis. See pages 12-13 of the petition. As stated above, petitioner cannot introduce new evidence to establish that the examiner erred in the determination, by *now*, for the first time in the record, making new arguments directed to teachings not explained in the request. For example, pages 33 and 34 of the request only relies upon Potter for teaching a single conduit in place of the separate tubing 81 and conduit 30 of Wu in the proposed rejection. In regard to the proposed rejection of BISSELL '02 in view of Potter, the determination found that Potter did not teach what the request alleged that Potter taught. See pages 51-52 of the request and page 13 of the determination. In this proposed rejection, the request also did not assert that Potter had teachings regarding routing a conduit through a connector. Therefore, upon review of the record, petitioner's arguments that the examiner did not consider Potter's teachings, as raised in the request, or made conclusions without any support are not persuasive.

Thus, the examiner correctly found that request failed to establish that there was a reasonable likelihood that requester would prevail on the proposed rejections for at least one claim.

3. Did the determination apply the requester's proposed rejections in the analysis?

Petitioner argues that the RLP analysis did not properly consider the proposed rejections in the request. See pages 13-15 of the petition. Specifically, petitioner advances that the RLP analysis only applied a wholesale substitution, which was not the basis stated in the request.

Upon review of the record, petitioner's arguments are not persuasive for the same reasons stated in response to the first issue. In summary, the RLP analysis in the determination is consistent with the proposed rejection as framed in the request. It did not include a wholesale replacement, as argued by the petitioner. Instead, for example, the determination provided a reasoned analysis of why Wu's device would become inoperable if modified as suggested by the request. See, e.g., pages 4-6 of the determination. As stated above, the initial burden to provide a RLP is on the requester and the record shows that the examiner provided sufficient reasons (e.g., inoperability of the primary reference if modified as suggested) to establish that the request failed to establish that there was a reasonable likelihood that requester would prevail on the proposed rejections for at least one claim. For these reasons, the record does not support

petitioner's argument that the examiner ignored the basis of the proposed rejection in the analysis in the determination.

4. Did the determination apply the broadest reasonable claim interpretation in the analysis?

Petitioner argues that the RLP analysis for claim 5 did not properly interpret the limitations under the broadest reasonable construction. See pages 15-16 of the petition. Specifically, petitioner advances that the RLP analysis did not account that claim 5, unlike claim 1, does not require that the steam conduit pass through the connector.

Upon review of the record, petitioner's arguments are not persuasive for the following reasons. First, it is noted that the determination separately analyzed the proposed rejections as applied to claim 1 and claim 5. See, e.g., pages 4-6 of the determination. Second, the analysis performed in regard to claim 5 specifically addressed the limitation of the connector being configured to connect the steam frame to the housing such that the steam frame is in communication with the steam outlet. See, e.g., page 6 of the determination. The determination found that "... even if the teachings of Lindholm would lead one of ordinary skill in the art to redesign Wu such that the steam conveying tube 30 is rerouted around the connector, the resulting structure would not meet the limitations of claims 5-18, which require ... a connector that has a specific structure or configuration that accommodates communication between the steam frame and the steam outlet." Petitioner argues that claim 5 does not require any special configuration for the connector. Upon review of the record, petitioner's claim construction is not reasonable. Claim 5 clearly requires that the connector is "... configured such that the steam frame is in communication with the steam outlet." Petitioner's construction essentially eliminates the limitation that the *connector is configured* to provide the communication and reduces it to just that the steam frame is in communication with the steam outlet. Therefore, for these reasons, the petitioner's arguments that the examiner did not employ the broadest reasonable interpretation in regard to claim 5 are not persuasive.

Accordingly, the examiner, under the broadest reasonable interpretation, correctly found that request failed to establish that there was a reasonable likelihood that requester would prevail on the proposed rejections for claims 5-18.

5. Did the determination use the proper RLP standard in the analysis?

Petitioner argues that as a result of the four above-mentioned issues, the examiner used an unreasonably high application of the RLP standard. See pages 16-17 of the petition. Specifically, petitioner essentially advances that the standard of examination to determine obviousness has not changed and that the examiner failed to conduct a full obviousness analysis in the determination.

Upon review of the record, petitioner's arguments are not persuasive for the same reasons provided in regard to the four above-mentioned issues. As stated above, Section 6(c)(3)(A) of the Leahy-Smith America Invents Act provides a provision under which a request for *inter*

partes reexamination will not be granted unless the information presented in the request shows that there is a reasonable likelihood that the requester will prevail with respect to at least one of the claims challenged in the request. In order to show a reasonable likelihood of prevailing, the request, in view of the prior art, must set forth proposed grounds of rejection in a manner that establishes that there is a reasonable likelihood that the requester will prevail with respect to at least one of the claims challenged in the request. In other words, the initial burden to provide a RLP is on the requester. Therefore, petitioner's argument that the examiner failed to apply a full obviousness analysis by considering issues not presented in the request is not persuasive.

Upon review of the record and for the reasons set forth in this decision, the examiner did not applied an unreasonably high level for the RLP standard in the determination that there was not a reasonable likelihood of prevailing on any claim set forth in proposed rejections.

The *de novo* review on the record of the request for reexamination in the '813 reexamination proceeding, undertaken in light of the arguments presented in the petition supports the conclusion that the request for reexamination did not establish that there is a reasonable likelihood that the requester will prevail with respect to at least one of the claims in the '342 patent for which reexamination was requested. Accordingly, the petition is denied.

CONCLUSION

1. Based on a *de novo* review of the record as a whole, the PETITION is DENIED.

2. A partial refund of the filing fee for the request for reexamination will be made to the third party requester in due course. See 35 U.S.C. 312(c) and 37 CFR 1.26(c).

3. This decision is final and nonappealable. 37 CFR 1.927. No further communication on this matter will be acknowledged or considered.

4. Telephone inquiries related to this decision should be directed to Andres Kashnikow, Supervisory Patent Examiner, at (571) 272-4361.

Irem Yucel
Director
Central Reexamination Unit

UNITED STATES PATENT AND TRADEMARK OFFICE

UNITED STATES DEPARTMENT OF COMMERCE
United States Patent and Trademark Office
Address: COMMISSIONER FOR PATENTS
P.O. Box 1450
Alexandria, Virginia 22313-1450
www.uspto.gov

APPLICATION NO.	FILING DATE	FIRST NAMED INVENTOR	ATTORNEY DOCKET NO.	CONFIRMATION NO.
95/001,831	11/18/2011	6,636,894	20336.0002.IP894	8911

20995 7590 02/28/2012

KNOBBE MARTENS OLSON & BEAR LLP
2040 MAIN STREET
FOURTEENTH FLOOR
IRVINE, CA 92614

EXAMINER	
ART UNIT	PAPER NUMBER

DATE MAILED: 02/28/2012

Please find below and/or attached an Office communication concerning this application or proceeding.

UNITED STATES PATENT AND TRADEMARK OFFICE

Commissioner for Patents
United States Patents and Trademark Office
P.O.Box 1450
Alexandria, VA 22313-1450
www.uspto.gov

DO NOT USE IN PALM PRINTER

THIRD PARTY REQUESTER'S CORRESPONDENCE ADDRESS
NOVAK DRUCE & QUIGG, LLP
(NDQ REEXAMINATION GROUP)
1000 LOUISIANA STREET, FIFTY-THIRD FLOOR
HOUSTON, TX 77002

Date:

MAILED

FEB 28 2012

CENTRAL REEXAMINATION UNIT

Transmittal of Communication to Third Party Requester
Inter Partes Reexamination

REEXAMINATION CONTROL NO. : 95001831
PATENT NO. : 6636894
TECHNOLOGY CENTER : 3999
ART UNIT : 3992

Enclosed is a copy of the latest communication from the United States Patent and Trademark Office in the above identified Reexamination proceeding. 37 CFR 1.903.

Prior to the filing of a Notice of Appeal, each time the patent owner responds to this communication, the third party requester of the inter partes reexamination may once file written comments within a period of 30 days from the date of service of the patent owner's response. This 30-day time period is statutory (35 U.S.C. 314(b)(2)), and, as such, it cannot be extended. See also 37 CFR 1.947.

If an ex parte reexamination has been merged with the inter partes reexamination, no responsive submission by any ex parte third party requester is permitted.

All correspondence relating to this inter partes reexamination proceeding should be directed to the Central Reexamination Unit at the mail, FAX, or hand-carry addresses given at the end of the communication enclosed with this transmittal.

UNITED STATES PATENT AND TRADEMARK OFFICE

Commissioner for Patents
United States Patent and Trademark Office
P.O. Box 1450
Alexandria, VA 22313-1450
www.uspto.gov

MAILED

FEB 28 2012

CENTRAL REEXAMINATION UNIT

KNOBBE MARTENS OLSON & BEAR LLP
2040 MAIN STREET, FOURTEENTH FLOOR
IRVINE, CA 92614

(For Patent Owner)

NOVAK DRUCE & QUIGG LLP
1000 LOUISIANA STREET
FIFTY-THIRD FLOOR
HOUSTON, TX 77002

(For Third Party Requester)

In re Short et al.
Inter Partes Reexamination Proceeding
Control No. 95/001,831
Filed: November 18, 2011
For: U.S. Patent No. 6,636,894

: DECISION ON
: PETITION UNDER
: 37 CFR 1.181 &
: 1.927

Third party requester filed a paper on January 20, 2012, entitled "Petition under 37 C.F.R. §§ 1.181 and 1.927 for Review of the Examiner's Order Denying Inter Partes Reexamination (MPEP § 2648)" (hereinafter "the petition"). The petition is before the Director of the Central Reexamination Unit (CRU). Petitioner, the reexamination requester, seeks supervisory review of the Order Denying the Request for *Inter Partes* Reexamination, which was mailed December 20, 2011.

The petition is **DENIED** for the reasons set forth below.

REVIEW OF RELEVANT FACTS

1. U.S. Patent No. 6,636,894 ("the '894 patent") issued on October 21, 2003.

2. A request for *ex parte* reexamination of the '894 patent was filed on September 24, 2004. The reexamination proceeding was assigned Control No. 90/007,220 (hereinafter, the '220 proceeding).

3. *Ex parte* reexamination of the '894 patent was granted on November 18, 2004 in the '220 proceeding.

4. The '220 proceeding concluded and an *ex parte* reexamination certificate confirming the patentability of claims 1-11 was issued on March 28, 2006.

5. A request for *inter partes* reexamination was filed on November 18, 2011 for claims 1 and 5-11 of the '894 patent. The reexamination proceeding was assigned Control No. 95/001,831 (hereinafter, the '831 proceeding).

6. A determination denying the request for reexamination of claims 1-11 of the '894 patent was mailed on December 20, 2011 in the '831 proceeding.

7. The instant petition was filed on January 20, 2012.

Petitioner's Grounds in Support of the Requested Relief

Petitioner alleges that the examiner's denial of the request for reexamination is improper because the determination refusing reexamination (1) incorrectly found that the '894 patent is entitled to the benefit of the provisional application; (2) incorrectly found that the request did not establish a reasonable likelihood of prevailing for the proposed rejections based on the Applegate reference; and (3) incorrectly found that the request did not establish a reasonable likelihood of prevailing for the proposed rejections based on the Birrell, Brothers, and Cohen references. See, e.g., page 4 of the petition.

DECISION

I. Standard of Review

35 USC 312(c) and 37 CFR 1.927 provide for the filing of a petition to review an examiner's determination refusing to order *inter partes* reexamination. The CRU Director's review on petition is *de novo*. Therefore, the review will determine whether the examiner's refusal to order reexamination for claims 1 and 5-11 was correct, and will

not necessarily indicate agreement or disagreement with every aspect of the examiner's rationale for the denial of the request to order reexamination for claims 1 and 5-11 of the '894 patent. The review will not necessarily consider evidence not of record at the time of the request for reexamination (e.g., evidence made of record for the first time in the petition).

II. Relevant Regulations for *Inter Partes* Reexamination

37 C.F.R. § 1.913 states in part:

> (a) Except as provided for in § 1.907 and in paragraph (b) of this section, any person other than the patent owner or its privies may, at any time during the period of enforceability of a patent which issued from an original application filed in the United States on or after November 29, 1999, file a request for *inter partes* reexamination by the Office of any claim of the patent on the basis of prior art patents or printed publications cited under § 1.501.

37 C.F.R. § 1.915(b) states in part:

> (3) A statement pointing out, based on the cited patents and printed publications, each showing of a reasonable likelihood that the requester will prevail with respect to at least one of the claims challenged in the request, and a detailed explanation of the pertinency and manner of applying the patents and printed publications to every claim for which reexamination is requested.

37 C.F.R. § 1.923 states:

> Within three months following the filing date of a request for *inter partes* reexamination under § 1.915, the examiner will consider the request and determine whether or not the request and the prior art establish a reasonable likelihood that the requester will prevail with respect to at least one of the claims challenged in the request. The examiner's determination will be based on the claims in effect at the time of the determination, will become a part of the official file of the patent, and will be mailed to the patent owner at the address as provided for in § 1.33(c) and to the third party requester. If the examiner determines that the request has not established a reasonable likelihood that the requester will prevail with respect to at least one of the challenged claims, the examiner shall refuse the request and shall not order *inter partes* reexamination.

37 C.F.R. § 1.927 states:

> The third party requester may seek review by a petition to the Director under § 1.181 within one month of the mailing date of the examiner's determination refusing to order *inter partes* reexamination. Any such petition must comply with § 1.181(b). If no petition is timely filed or if the decision on petition affirms that a reasonable likelihood that the

> requester will prevail with respect to at least one of the claims challenged in the request has not been established, the determination shall be final and nonappealable.

37 C.F.R. § 1.931(a) states:

> If it is found that there is a reasonable likelihood that the requester will prevail with respect to at least one of the claims challenged in the request, the determination will include an order for *inter partes* reexamination of the patent for resolution of the question of whether the requester will prevail.

III. The Legal Standard for Ordering Reexamination

A review of 35 USC 311-317 and 37 CFR 1.915, 1.919, and 1.923, after implementation of the Leahy-Smith America Invents Act[1], shows that *inter partes* reexamination of a United States Patent is only authorized when a consideration of prior art consisting of patents or printed publications establishes that there is a reasonable likelihood that the requester will prevail with respect to at least one of the claims challenged in the request. In particular, 35 USC 311(a) requires that a request for *inter partes* reexamination be based upon prior art as set forth in 35 USC 301, that is, prior art consisting of patents or printed publications, while 37 CFR 1.915(b)(3) requires that a request for *inter partes* reexamination include "a statement ... showing that there is a reasonable likelihood that the requester will prevail with respect to at least one of the claims challenged in the request."

Section 6(c)(3)(A) of the Leahy-Smith America Invents Act amended 35 USC 312 and 313 to delete any reference to the SNQ standard, and provide, in place of each deletion, language requiring the information presented in a request for *inter partes* reexamination (filed pursuant to 35 USC 311) to show that there is a reasonable likelihood that the requester will prevail with respect to at least one of the claims challenged in the request. With respect to the reasonable likelihood standard, House Rep. 112–98 (Part 1), 112th Cong., 1st Sess., provides, in connection with *inter partes* review, the following:

> "The threshold for initiating an inter partes review is elevated from 'significant new question of patentability'—a standard that currently allows 95% of all requests to be granted—to a standard requiring petitioners to present information showing that their challenge has a reasonable likelihood of success." H.R. Rep. No. 112–98 (Part 1), at 47.

Similarly, with respect to the reasonable likelihood standard, a Senate debate in the Congressional Record at S1375 (March 8, 2011), 112th Cong., 1st Sess., provides, in connection with *inter partes* review, the following:

> "Among the most important protections for patent owners added by the present bill are its elevated thresholds for instituting inter partes and post-grant reviews.

---

[1] Public Law 112-29, 125 Stat. 284 (2011).

> The present bill dispenses with the test of "substantial new question of patentability," a standard that currently allows 95% of all requests to be granted. It instead imposes thresholds that require petitioners to present information that creates serious doubts about the patent's validity. ...
>
> ...The "reasonable likelihood" test is currently used in evaluating whether a party is entitled to a preliminary injunction, and effectively requires the petitioner to present a prima facie case justifying a rejection of the claims in the patent."

To implement this change to the standard of granting an *inter partes* reexamination request, the Office revised the rules of practice for *inter partes* reexamination by amending 37 CFR 1.915, 1.923, 1.927, and 1.931 to delete any reference to the SNQ standard for granting reexamination, and insert in its place reference to the newly enacted "reasonable likelihood" standard. See "Revision of Standard for Granting an Inter Partes Reexamination Request: Final Rule," 76 Fed. Reg. 59055 (Sept. 23, 2011). The relevant regulations, as amended, appear in subsection II.

IV. Analysis of the Request for Reexamination of the '831 patent

The Request in the instant proceeding sets forth the following proposed rejections:

1. Claims 1 and 5-11 are anticipated by U.S. Patent No. 6,470,027 to Birrell, Jr. ("Birrell").

2. Claims 1, 6 and 9 are anticipated by U.S. Patent No. 6,438,125 to Brothers.

3. Claim 5 is rendered obvious by the combined teachings of Brothers and U.S. Patent No. 5,987,611 to Freund.

4. Claims 7, 8, 10 and 11 are rendered obvious by the combined teachings of Brothers and U.S. Patent No. 6,119,160 to Zhang et al. ("Zhang").

5. Claims 1 and 6-11 are anticipated by U.S. Patent No. 6,321,336 to Applegate et al. ("Applegate").

6. Claim 5 is rendered obvious by the combined teachings of Applegate and Freund.

7. Claims 1, 6 and 9 are anticipated by U.S. Patent No. 6,389,462 to Cohen et al. ("Cohen").

8. Claim 5 is rendered obvious by the combined teachings of Cohen and Freund.

9. Claims 7, 8, 10 and 11 are rendered obvious by the combined teachings of Cohen and Zhang.

The Request was denied in the December 20, 2011 Determination Denying the Request for *Inter Partes* Reexamination. The following grounds for denial were set forth by the examiner:

- Claims 1 and 5-11 of the '894 patent were fully supported by provisional patent application 60/111,497. Based on this finding the examiner determined that Birrell, Brothers and Cohen were not available as prior art. Thus, there was no reasonable likelihood requester would prevail for proposed rejections 1-4 and 7-9, which rely on these references.

- The examiner found that Applegate fails to disclose all of the limitations of the independent claims for which reexamination was requested. Thus, there was no reasonable likelihood requester would prevail for proposed rejections 5 and 6, which are based on Applegate.

First Ground - Birrell, Brothers and Cohen:

Upon review of the record, the examiner's finding that claims 1 and 5-11 are fully supported by provisional patent application 60/111,497, and thus, that Birrell, Brothers and Cohen are not prior art with respect to the '894 patent is correct. This first ground is determinative of both the first and third issues raised in the petition. In other words, a finding that the '894 patent is entitled to the benefit of the provisional application and that Birrell, Brothers, Cohen are not prior art (issue 1) resolves the issue of whether the request presented a reasonable likelihood of prevailing (RLP) showing for the proposed rejections based on Birrell, Brothers, or Cohen (issue 3). In summary, this ground addresses all the proposed rejections based on Birrell, Brothers, and Cohen and finds that the examiner correctly determined that the proposed rejections 1-4 and 7-9 fail to show a reasonable likelihood of prevailing as to any of the patent claims.

MPEP 2163, subsection II(b), states in relevant part:

> The examiner has the initial burden of presenting evidence or reasoning to explain why persons skilled in the art would not recognize in the original disclosure a description of the invention defined by the claims. See *Wertheim,* 541 F.2d 263 "[T]he PTO has the initial burden of presenting evidence or reasons why persons skilled in the art would not recognize in the disclosure a description of the invention defined by the claims.").
>
> To comply with the written description requirement of 35 U,S.C. 112, para. 1, or to be entitled to an earlier prior date or filing date under 35 U.S.C. 119,120 or 365(c), each claim limitation must be expressly, implicitly, or

> inherently support in the originally filed disclosure. When an explicit limitation in a claim is not present in the written description whose benefit is sought it must be shown that a person of ordinary skill would have understood, at the time of the patent application was filed, that the description requires that limitation. *Hyatt b. Boone*, 146 F.3d 1348, 1353 (Fed. Cir. 1998).

Applying these policies and procedures to the context of a request for *inter partes* reexamination, the requester stands in the position of the examiner. In other words, the requirement that the request must present a reasonable likelihood of prevailing (RLP) on at least one claim places the initial burden on the requester to establish that the cited references are prior art to the claimed invention. Upon review of the record, the '894 patent was filed on December 8, 1999 and claimed the benefit of U.S. provisional application 60/111,497, which was filed on December 8, 1998. U.S. Patent No. 6,740,027 to Birrell, Jr ("Birrell") issued on October 22, 2002 and was filed on April 30, 1999. Birrell did not claim the benefit or priority to any earlier-filed application. U.S. Patent No. 6,438,125 to Brothers ("Brothers") issued on August 20, 2002 and was filed on January 22, 1999. Brothers did not claim the benefit or priority to any earlier-filed application. U.S. Patent No. 6,389,462 to Cohen et al. ("Cohen") issued on May 14, 2002 and was filed on December 16, 1998. Cohen did not claim the benefit or priority to any earlier-filed application. Therefore, Birrell, Brothers, and Cohen are intervening documents because they were filed prior to the filing date of the '894 patent but after the filing date of the U.S. provisional application 60/111,497. As discussed above, for intervening documents, the initial burden is placed on the requester to present sufficient evidence or reasoning to explain why a person skill in the art would not recognize in the original disclosure a description of the invention defined by the claims. See MPEP 2617.

Pages 17-19 of the Request provide requester's showing as to why the '894 patent is not entitled to the benefit of the filing date of the U.S. provisional application 60/111,497. Specifically, requester asserts that the U.S. provisional application 60/111,497 fails to disclose a redirection server or its functionality. In the Determination denying reexamination, the examiner carefully considered whether or not claims 1 and 5-11 were fully supported by the U.S. provisional patent application 60/111,497. The record shows that the examiner considered the requester's assertion that there is no support for the redirection server or its functional as set forth on pages 17-19 of the request. See Determination Denying Request for *Inter Partes* Reexamination, page 5 to page 6, line 5. Specifically, the Determination clearly and precisely pointed out where support for the redirection server and its functionality are found in the disclosure of U.S. provisional application 60/111,497. Having found contradictory evidence, e.g., evidence that a person of ordinary skill would recognize in the original disclosure a description of the invention defined by the claims, the examiner determined that the claims were fully supported by the provisional application.

In the petition, petitioner asserts that the Determination denying reexamination incorrectly found that U.S. provisional application 60/111,497 has support for all the limitations in claims 1 and 6 of the '894 patent. Specifically, petitioner argued that the portions of the disclosure of U.S. provisional application 60/111,497 (hereinafter "the provisional") pointed to in the Determination do not fully support the redirection server and its claimed functionality. Petitioner's arguments are not persuasive.

As an initial matter, petitioner is reminded that there is no *in haec verba* requirement under 35 USC 112 and 119(e). The issue for review when the adequacy of the written description is challenged is whether or not a person of ordinary skill in the art would recognize that the disclosure of the prior-filed application provides support for the claims. In the instant case, a person skilled in the art would have recognized that the provisional provides support for the redirection server and its functions as claimed.

The provisional discloses a Nomadix USG which is a redirection server. The Nomadix USG performs all of the functions recited as performed by a redirection server in claims 1 and 6. As those skilled in the art at the time of the invention would have known, every time a request reaches a node it is modified in accordance with the translation table located at the node. Thus, the requests, originating from the user's desktop, are modified by the DSLAM before they are received by the Nomadix USG. Ergo, the requests have been modified. As shown in Fig. 2, the Nomadix USG receives all requests from the user's desktop. Thus, the Nomadix USG receives requests requiring redirection.

Contrary to petitioner's arguments in the request, claims 1 and 6 do not require that the redirection server modify the original destination address access request, intercept any requests or send any requests other than the browser redirect message. These functions are performed by other devices. Accordingly, the provisional provides support for the redirection server and its functionality as set forth in claims 1 and 6.

In the petition, petitioner presented new arguments contending that the provisional fails to provide support for the gateway device, a browser redirect message and interaction between a redirection server and a gateway device as set forth in claims 1 and 6. As stated above, petitioner cannot introduce new evidence to establish that the examiner erred in the Determination, e.g., effectively bootstrap new arguments into being "new evidence" to establish a reasonable likelihood of prevailing in the request for reexamination in the '831 proceeding by *now*, for the first time in the record, making new arguments directed to the lack of support in U.S. provisional application 60/111,497 in the present petition.

That being said, the provisional does provide support for these limitations as follows:

Re Claim 1:

1. The provisional discloses the step of modifying the original destination address access request (as discussed above, modification of a request (*i.e.* a packet) occurs at every node that a request encounters).
2. A modification occurs at the gateway device (the DSLAM).
3. The modified request is communicated to the redirection server (Fig. 2 shows a line connecting the DSLAM to the Nomadix USG).
4. Communication of the modified request occurs regardless of whether or not redirection is required and thus occurs when redirection is required.
5. The provisional discloses the step of having the redirection server respond to the modified request with a browser redirect message (page 2, last line to page 3, line 2).
6. The browser redirect message reassigns the modified request to an administrator-specified redirect destination address (the user sign-in page on his browser).
7. The provisional disclose the step of having the gateway device intercept the browser redirect message (as shown in Fig. 2 all messages sent from the Nomadix USG to the user's desktop are intercepted by the DSLAM).
8. The gateway device modifies the browser redirect message with the stored original destination address (the purpose of a DSLAM is to route messages to a specific user's device, which can only be accomplished if the message is modified to include the original destination address of the user).
9. The provisional discloses the step of sending the modified browser redirect message to the computer (page 2, last line to page 3 line 2).
10. In the provisional the computer is automatically redirected to the redirect destination address (the sign-in page).

Re Claim 6:

1. The provisional discloses a gateway device (DSLAM) that modifies the original destination address (as discussed above modification occurs at every node including at the DSLAM).
2. In the provisional modification occurs whether or not redirection is required, therefor modification occurs when redirection is required.
3. The provisional discloses a redirection server (Nomadix USG).
4. The redirection server is in communication with the gateway device (Fig. 2).
5. The redirection server receives the modified request from the gateway device (receipt of requests (packets) is represented by the line between the Nomadix USG and the DSLAM).
6. The redirection server responds with a browser redirect message (page 2, last line, to page 3, line 2).
7. The browser redirect message reassigns the request to an administrator-specified, redirect destination address (the user sign-in page of his browser).
8. In the provisional the gateway device intercepts the browser redirect message (as shown in Fig. 2 the DSLAM intercepts all messages from the Nomadix USG).

9. The gateway device modifies the response with the stored original destination address (by using its translation table as discussed above).
10. The gateway device forwards the browser redirect message to the computer (this is the purpose of the DSLAM to get the message to the correct user).
11. In the provisional the computer receives the modified browser redirect message (page 2, last line to page 3 line 2).
12. In the provisional the computer is automatically redirect to the redirected destination address (the sign-in page).

Petitioner argues that the attachments to the provisional (Attachments A-H) do not provide support for claims 1 and 6. As it has been found that the provisional itself provides support for these limitations as outlined above, the question of whether or not the attachments to the provisional application provide additional support for these claims need not be considered in this decision. Furthermore, petitioner's arguments that the provisional does not provide support for the alleged claim interpretation advanced in other proceedings are not dispositive. Patent owner's arguments in prior examinations or litigation as to claim construction are not determinative like definitions provided in the disclosure of the patent. When a patent applicant fails to set forth a clear and explicit definition for a term in the disclosure of the patent, such term is given its plain meaning, which is its ordinary and customary meaning, under the broadest reasonable interpretation in light of the specification. See MPEP 2111.01. The examiner in this proceeding defined the term "redirection server" by relying upon the meaning imparted by the specification and the drawings to one of ordinary skill in the related art at the time the invention was made. While the petition alleges that the examiner's interpretation in the prior reexamination proceeding was different, the petition fails to clearly show the error in the examiner's interpretation in the present proceeding. In summary, upon review of the record, the examiner's interpretation in this proceeding is consistent with the Office's policy and procedures of interpreting claim limitations under the broadest reasonable construction, in light of the specification, that would be understood by one of ordinary skill at the time the invention was made.

Thus, the examiner correctly found that request failed to establish that Birrell, Brothers, and Cohen are not prior art to the '894 patent and correctly determined that there was no likelihood that requester would prevail on proposed rejections 1-4 and 7-9.

Second Ground – Applegate:

Section 6(c)(3)(A) of the Leahy-Smith America Invents Act provides a provision under which a request for *inter partes* reexamination will not be granted unless the information presented in the request shows that there is a reasonable likelihood that the requester will prevail with respect to at least one of the claims challenged in the request.

In order to show a reasonable likelihood of prevailing, the request, in view of the prior art, must set forth a proposed ground of rejection for a claim(s) that addresses each and every limitation set forth in the claim(s).

Upon review of the record in the instant proceeding, the examiner found that Applegate fails to disclose each and every limitation of claims 1 and 6-11. Specifically, the examiner found that Applegate fails to disclose "responding at the redirection server, to the modified request with a browser redirect message" (claim 1) and "a redirection server in communication with the gateway device that receives the modified request from the gateway device and responds with a browser redirect message" (claim 6). See pages 8-10 in the December 20, 2011 Determination. Proposed rejections 5 and 6 rely on Applegate teaching every limitation in independent claims 1 and 6 under 35 USC 102. Proposed rejection 6 adds a secondary reference (Freund) but its teachings are only applied to the limitations found in dependent claim 5. Therefore, the Freund reference does not cure the deficiencies in not teaching every limitation in independent claims 1 and 6. Because the request failed to show that Applegate teaches every limitation of independent claims 1 and 6, the examiner found that there was not a reasonable likelihood of prevailing on any claim set forth in proposed rejections 5 and 6.

In response to the examiner's findings, the petition argues that the limitation of "responding at the redirection server, to the modified request with a browser redirect message" should be broadly interpreted to cover an embodiment wherein the redirection server is contained within the gateway device, as taught by Applegate.

Petitioner is correct that this limitation covers embodiments wherein the redirection server is contained within the gateway device; however, that is not the reason that Applegate fails to disclose each and every limitation of claims 1 and 6. The reason advanced by the examiner in the Determination is that Applegate fails to disclose a redirection server.

Claims 1 and 6 clearly claim a redirection server that is a piece of hardware that can be configured as a stand-alone unit or an add-in module for a gateway device (see Fig. 2 of the provisional and column 7, lines 22-24). The redirection server disclosed by and claimed in the '894 patent is not software. Since, as admitted by petitioner, the only element disclosed by Applegate that performs redirection is software, Applegate cannot meet the limitation of a redirection server.

For these reasons, the examiner correctly determined that Applegate fails to disclose each and every limitation of claims 1 and 6-11, and accordingly, correctly determined based on this finding, that there was no likelihood that requester would prevail on any claim set forth in proposed rejections 5 and 6.

The *de novo* review on the record of the request for reexamination in the '831 reexamination proceeding, undertaken in light of the arguments presented in the petition supports the conclusion that the request for reexamination did not establish that there is a reasonable likelihood that the requester will prevail with respect to at least one of the claims in the '894 patent for which reexamination was requested. Accordingly, the petition is denied.

CONCLUSION

1. Based on a *de novo* review of the record as a whole, the PETITION is DENIED.

2. A partial refund of the filing fee for the request for reexamination will be made to the third party requester in due course. See 35 U.S.C. 312(c) and 37 CFR 1.26(c).

3. This decision is final and nonappealable. 37 CFR 1.927. No further communication on this matter will be acknowledged or considered.

4. Telephone inquiries related to this decision should be directed to Matthew Brooks, Supervisory Patent Examiner, at (571) 272-8112.

Irem Yucel
Director
Central Reexamination Unit

UNITED STATES PATENT AND TRADEMARK OFFICE

UNITED STATES DEPARTMENT OF COMMERCE
United States Patent and Trademark Office
Address: COMMISSIONER FOR PATENTS
P.O. Box 1450
Alexandria, Virginia 22313-1450
www.uspto.gov

APPLICATION NO.	FILING DATE	FIRST NAMED INVENTOR	ATTORNEY DOCKET NO.	CONFIRMATION NO.
95/001,836	11/29/2011	6480962	1762030.00124US1	4559

74877 7590 02/29/2012

King and Spalding LLP
1700 Pennsylvania Ave, NW
Suite 200
Washington, DC 20006

EXAMINER	
ART UNIT	PAPER NUMBER

DATE MAILED: 02/29/2012

Please find below and/or attached an Office communication concerning this application or proceeding.

UNITED STATES PATENT AND TRADEMARK OFFICE

Commissioner for Patents
United States Patents and Trademark Office
P.O.Box 1450
Alexandria, VA 22313-1450
www.uspto.gov

DO NOT USE IN PALM PRINTER

THIRD PARTY REQUESTER'S CORRESPONDENCE ADDRESS
WILMERHALE/SYMANTEC CORPORATION
WILMER CUTLER PICKERING HALE AND DORR LLP
1875 PENNSYLVANIA AVENUE, N.W.
WASHINGTON, D.C. 20006

Date:

MAILED

FEB 29 2012

CENTRAL REEXAMINATION UNIT

Transmittal of Communication to Third Party Requester
Inter Partes Reexamination

REEXAMINATION CONTROL NO. : 95001836
PATENT NO. : 6480962
TECHNOLOGY CENTER : 3999
ART UNIT : 3992

Enclosed is a copy of the latest communication from the United States Patent and Trademark Office in the above identified Reexamination proceeding. 37 CFR 1.903.

Prior to the filing of a Notice of Appeal, each time the patent owner responds to this communication, the third party requester of the inter partes reexamination may once file written comments within a period of 30 days from the date of service of the patent owner's response. This 30-day time period is statutory (35 U.S.C. 314(b)(2)), and, as such, it cannot be extended. See also 37 CFR 1.947.

If an ex parte reexamination has been merged with the inter partes reexamination, no responsive submission by any ex parte third party requester is permitted.

All correspondence relating to this inter partes reexamination proceeding should be directed to the Central Reexamination Unit at the mail, FAX, or hand-carry addresses given at the end of the communication enclosed with this transmittal.

UNITED STATES PATENT AND TRADEMARK OFFICE

Commissioner for Patents
United States Patent and Trademark Office
P.O. Box 1450
Alexandria, VA 22313-1450
www.uspto.gov

King and Spalding LLP
1700 Pennsylvania Ave, NW
Suite 200
Washington, DC 20006

(For Patent Owner)

MAILED

FEB 29 2012

CENTRAL REEXAMINATION

Wilmerhale/Symantec Corporation
Wilmer Cutler Pickering Hale and Dorr LLP
1875 Pennsylvania Avenue N.W.
Washington, DC 20006

(For Third Party Requester)

In re Shlomo Touboul :
Inter Partes Reexamination Proceeding : **DECISION**
Control No. 95/001,836 : **DISMISSING**
Filed: November 29, 2011 : **PETITION**
For: U.S. Patent No. 6,480,962 :

This is a decision on the patent owner paper entitled "PETITION TO SUSPEND RULE 37 C.F.R. § 1.943 PURSUANT TO THE PROVISIONS OF 37 C.F.R. § 1.183," filed on February 15, 2012.

The patent owner petition is before the Office of Patent Legal Administration for consideration.

The petition requesting waiver of the page limit for patent owner's response is **dismissed**.

REVIEW OF THE RELEVANT FACTS

1. On November 12, 2002, United States Patent No. 6,480,962 (the '962 patent) issued to Shlomo Toubol.

2. On November 29, 2011, a request for *inter partes* reexamination of the '962 patent was filed by a third party requester, which request was assigned Reexamination Control No. 95/001,836 (the '1836 proceeding).

3. On January 25, 2012, the Office mailed an order granting *inter partes* reexamination in the '1836 proceeding, accompanied by an Office action on the merits.

4. On February 15, 2012, patent owner filed the instant petition entitled, "PETITION TO SUSPEND RULE 37 C.F.R. § 1.943 PURSUANT TO THE PROVISIONS OF 37 C.F.R. § 1.183" (petition under 37 CFR 1.183).

DECISION

Relevant Statutes, Regulations and Procedures

37 CFR 1.183 provides:

> In an extraordinary situation, when justice requires, any requirement of the regulations in this part which is not a requirement of the statutes may be suspended or waived by the Director or the Director's designee, sua sponte, or on petition of the interested party, subject to such other requirements as may be imposed. Any petition under this section must be accompanied by the petition fee set forth in § 1.17(f).

37 CFR 1.943(b) provides:

> Responses by the patent owner and written comments by the third party requester shall not exceed 50 pages in length, excluding amendments, appendices of claims, and reference materials such as prior art references.

Patent Owner's Petition under 37 CFR 1.183

In the instant petition, patent owner requests suspension of 37 CFR 1.943(b), which limits patent owner responses to 50 pages in length. In support of patent owner's request for waiver of 37 CFR 1.943(b), patent owner asserts that "the examiner issued a rejection of all fifty-five (55) claims in a seventy-four (74) page Office Action that incorporates by reference additional material from a sixty-seven (67) page Request for *Inter Partes* Reexamination" and that "the Office Action includes twenty-one (21) separate grounds of rejection, covering fifty-five (55) claims."[1] Patent owner also states that the grounds of rejection "incorporate literally **hundreds of pages** of Exhibits from the Request."[2] Further, patent owner asserts that the regulatory requirement that "the Patent Owner's response cannot exceed fifty (50) pages in length places a severe restraint on the Patent Owner to fairly and fully address each separate grounds of rejection."[3] Accordingly, to allow for two pages per each claim rejected, patent owner requests that "the page limit be extended to one hundred ten (110) pages."[4] Patent owner asserts that "this 2-page per claim request is reasonable and necessary in order for the Patent Owner to make a full and complete response to the Office Action" and that such response "would be a fraction of the size of the Office action...."[5]

Analysis and Findings

The instant petition under 37 CFR 1.183 has been fully considered. 37 CFR 1.183 provides for suspension or waiver of any requirement of the regulations which is not a requirement of the statutes in an extraordinary situation, when justice requires, on petition of the interested party.

---

[1] Petition under 37 CFR 1.183 at page 2.
[2] Id.
[3] Id.
[4] Id. at page 3.
[5] Id.

The burden is on petitioner to set forth with specificity the facts that give rise to an extraordinary situation in which justice requires suspension of a rule.

As indicated above, patent owner seeks waiver of 37 CFR 1.943(b) to increase the page limit for patent owner's response to the outstanding Office action to a maximum length of 110 pages. General requests, unsubstantiated by specific facts which justify an increase in the number of pages available for patent owner to respond to an Office action, are not sufficient to demonstrate an extraordinary situation in which justice requires suspension of 37 CFR 1.943(b). In this instance, patent owner has requested that the page limit for patent owner's response to the outstanding Office action be increased to an amount (a maximum of 110 pages) by discussing, for example, the length of the Office action (including the number of pages incorporated by reference from the request for *inter partes* reexamination), the number of rejections adopted by the examiner, and the number of claims rejected. However, petitioner has not set forth with specificity the facts upon which petitioner based its determination that approximately 60 extra pages are necessary for patent owner to adequately respond to the outstanding Office action. While patent owner estimates that 110 pages are needed based on "a 2-page per claim" calculation, without an actual proposed response to evaluate, the Office has no ability to assess whether 110 pages is excessive or adequate under the facts and circumstances in this instance.

Instead, a showing which patent owner can make in support of a request for waiver of the 50-page limit of 37 CFR 1.943(b) can be an attempt to draft a patent owner's response in compliance with the 50-page limit, and submission of a resulting response that is *in excess* of 50 pages concurrently with a renewed petition under 37 CFR 1.183 for waiver of 37 CFR 1.943(b), requesting entry of the submitted response and setting forth the additional circumstances that support the request for waiver of the regulatory page limit (*e.g.*, the length of the Office action, etc.). Such a response can be evaluated for economizing, extraneous material, and arrangement, without repetition of information already of record. In this way, as opposed to relying on general estimates that patent owner needs a maximum of 110 pages to develop a response, patent owner can rely on the proposed response: (1) for justification that more pages are needed to complete the response, and (2) to set forth an accurate determination of exactly how many additional pages patent owner deems to be needed to complete the response. No fee would be required to be submitted with any such renewed petition.

Accordingly, for at least the reasons set forth above, in this instance, patent owner has not presented sufficient facts that demonstrate an extraordinary situation in which justice requires suspension of 37 CFR 1.943(b), and the February 15, 2012 petition under 37 CFR 1.183 is dismissed.

ADDITIONAL DISCUSSION

Note that if patent owner files a renewed petition under 37 CFR 1.183 concurrently with a proposed over-length response and the Office does not grant the renewed petition to the full extent of the proposed over-length response, patent owner would be given a period of 15 days

within which to submit a compliant response in accordance with the page limit set forth in the decision on that petition.[6] *See* MPEP 2667(I)(A)(2).

Further note that, if the Office grants the renewed petition under 37 CFR 1.183 to the full extent of the proposed over-length response, third party requester would have 30 days from the mailing date of the decision, granting patent owner's renewed petition under 37 CFR 1.183 and accepting patent owner's proposed over-length response as page-length compliant, to file a comments paper pursuant to 37 CFR 1.947. Otherwise, if the Office does not grant the renewed petition under 37 CFR 1.183, third party requester would have 30 days from the date of service of any patent owner rule-compliant response, submitted in accordance with the page limit set forth in the decision dismissing patent owner's renewed petition under 37 CFR 1.183, to file a comments paper pursuant to 37 CFR 1.947.[7]

CONCLUSION

1. The patent owner's February 15, 2012 petition under 37 CFR 1.183 is **dismissed**.

2. Any questions concerning this communication should be directed to Maria Nuzzolillo at 571-272-8150 or Nicole D. Haines, Legal Advisor, at 571-272-7717.

Pinchus M. Laufer
Senior Legal Advisor
Office of Patent Legal Administration

02-28-2012

[6] Clearly, if patent owner files a page-length compliant response, with or without a renewed petition, third party requester would have 30 days from the date of service of patent owner's page-length compliant response to file a comments paper pursuant to 37 CFR 1.947.

[7] MPEP 2666.05(I) provides guidance for timing of third party requester comments submission response to an over-length patent owner response submission accompanied by a petition under 37 CFR 1.183 for waiver of 37 CFR 1.943(b) (emphasis added):

> The following special circumstance is to be noted. In unique circumstances, it may happen that a patent owner files a response to an Office action and the page length of the response *exceeds* the page length set by 37 CFR 1.943(b). Accompanying the response is a petition under 37 CFR 1.183 requesting waiver of the 37 CFR 1.943(b) requirement. Until such a 37 CFR 1.183 petition to waive the page length is granted, or a page length compliant response is filed (if the 37 CFR 1.183 petition is not granted), the patent owner response is incomplete. Pursuant to MPEP § 2666.40, "[a]fter the owner completes the response, the examiner will wait two months from the date of service of the patent owner's completion of the response, and then take up the case for action, since the 30 days for the third party requester comments on the response as completed will have expired by that time. The third party requester may file comments on the response as completed ... The response as completed is treated as a new response on-the-merits to the Office action; thus, the third party requester is entitled to file comments and has 30 days to do so." Based on the above, at the time the 37 CFR 1.183 petition is granted, the patent owner response becomes complete with its content being set in place, and the requester has 30 days from the date of the decision granting the 37 CFR 1.183 petition to file a comment paper pursuant to 37 CFR 1.947.

UNITED STATES PATENT AND TRADEMARK OFFICE

Commissioner for Patents
United States Patent and Trademark Office
P.O. Box 1450
Alexandria, VA 22313-1450
www.uspto.gov

DICKSTEIN SHAPIRO LLP
1633 BROADWAY
NEW YORK, NY 10019

(For Patent Owner)

MAILED

MAR 23 2012

CENTRAL REEXAMINATION UNIT

MUNCY, GEISSLER, OLDS & LOWE, PLLC
4000 LAGATO ROAD
SUITE 310
FAIRFAX, VA 22033

(For Third Party Requester)

In re Lu et al.
Inter Partes Reexamination Proceeding
Control No. 95/001,840
Filed: December 7, 2011
For: U.S. Patent No. 7,789,127

: DECISION ON
: PETITION UNDER
: 37 CFR 1.181 &
: 1.927

Third party requester filed a paper on February 10, 2012, entitled "Petition under 37 C.F.R. § 1.927" (hereinafter "the petition"). The petition is before the Director of the Central Reexamination Unit (CRU). Petitioner, the reexamination requester, seeks supervisory review of the order, which was mailed January 10, 2012, partially denying the Request for *Inter Partes* Reexamination.

The petition is **DENIED** for the reasons set forth below.

REVIEW OF RELEVANT FACTS

1. U.S. Patent No. 7,789,127 ("the '127 patent") issued on September 7, 2010.

2. A request for *inter partes* reexamination was filed on December 7, 2011 for claims 1-13 of the '127 patent. The reexamination proceeding was assigned Control No. 95/001,840 (hereinafter, the '840 proceeding).

3. A determination ordering reexamination for claims 1-7 and 12 and denying reexamination for claims 8-11 and 13 of the '127 patent was mailed on January 10, 2012 in the '840 proceeding. A non-final Office action was mailed on the same day.

4. The instant petition was filed on February 10, 2012.

Petitioner's Grounds in Support of the Requested Relief

Petitioner alleges that the examiner's partial denial of the request for reexamination is improper because the determination incorrectly found that the request did not establish a reasonable likelihood of prevailing for the following grounds: (1) Beulter renders obvious claims 8-11 and 13 (Ground 2); (2) Saier in view of Thors, Chiang and Liu renders obvious claims 8-11 and 13 (Ground 3); (3) Yu in view of Chiang and Liu renders obvious claims 8-11 and 13 (Ground 5); and (4) Schuez in view of Xu renders obvious claims 1-13 (Ground 6). See, e.g., pages 3-9 of the petition. The petition addresses Grounds 3 and 5 together. See, e.g., page 13 of the petition.

DECISION

I. Standard of Review

35 USC 312(c) and 37 CFR 1.927 provide for the filing of a petition to review an examiner's determination partially refusing to order *inter partes* reexamination. The CRU Director's review on petition is *de novo*. Therefore, the review will determine whether the examiner's refusal to order reexamination for claims 8-11 and 13 was correct, and will not necessarily indicate agreement or disagreement with every aspect of the examiner's rationale for the denial of the request to order reexamination for claims 8-11 and 13 of the '127 patent. The review will not necessarily consider evidence not of record at the time of the request for reexamination (e.g., evidence made of record for the first time in the petition). The review will not address issues raised in the petition in regard to claims for which reexamination was granted. See MPEP 2646, subsection II. See also MPEP 2648, which states "[e]xcept for the limited ultra vires exception described in MPEP § 2646, ***no petition may be filed requesting review of a decision granting a request for reexamination even if the decision grants the request as to a specific claim for reasons other than those advanced by the third party requester.***" [emphasis added] Specifically, the decision will not address the determination that Ground 6 fails to raise a

reasonable likelihood of prevailing because the determination and the issues raised by the petition involve an analysis of claim 1, which is a claim for which reexamination was granted. In other words, the basis for petitioning the denial of Ground 6 is not provided for in 37 CFR 1.927 because reexamination was not denied for claim 1. The order granted reexamination for claim 1, even though the order did not agree with all the grounds set forth in the request for reexamination. For this reason, the issues regarding Ground 6 will not be addressed.

II. Relevant Regulations for *Inter Partes* Reexamination

37 C.F.R. § 1.913 states in part:

> (a) Except as provided for in § 1.907 and in paragraph (b) of this section, any person other than the patent owner or its privies may, at any time during the period of enforceability of a patent which issued from an original application filed in the United States on or after November 29, 1999, file a request for *inter partes* reexamination by the Office of any claim of the patent on the basis of prior art patents or printed publications cited under § 1.501.

37 C.F.R. § 1.915(b) states in part:

> (3) A statement pointing out, based on the cited patents and printed publications, each showing of a reasonable likelihood that the requester will prevail with respect to at least one of the claims challenged in the request, and a detailed explanation of the pertinency and manner of applying the patents and printed publications to every claim for which reexamination is requested.

37 C.F.R. § 1.923 states:

> Within three months following the filing date of a request for *inter partes* reexamination under § 1.915, the examiner will consider the request and determine whether or not the request and the prior art establish a reasonable likelihood that the requester will prevail with respect to at least one of the claims challenged in the request. The examiner's determination will be based on the claims in effect at the time of the determination, will become a part of the official file of the patent, and will be mailed to the patent owner at the address as provided for in § 1.33(c) and to the third party requester. If the examiner determines that the request has not established a reasonable likelihood that the requester will prevail with respect to at least one of the challenged claims, the examiner shall refuse the request and shall not order *inter partes* reexamination.

37 C.F.R. § 1.927 states:

> The third party requester may seek review by a petition to the Director under § 1.181 within one month of the mailing date of the examiner's determination refusing to order *inter partes* reexamination. Any such petition must comply with § 1.181(b). If no petition is timely filed or if the decision on petition affirms that a reasonable likelihood that the requester will prevail with respect to at least one of the claims challenged in the request has not been established, the determination shall be final and nonappealable.

37 C.F.R. § 1.931(a) states:

> If it is found that there is a reasonable likelihood that the requester will prevail with respect to at least one of the claims challenged in the request, the determination will include an order for *inter partes* reexamination of the patent for resolution of the question of whether the requester will prevail.

III. The Legal Standard for Ordering Reexamination

A review of 35 USC 311-317 and 37 CFR 1.915, 1.919, and 1.923, after implementation of the Leahy-Smith America Invents Act[1], shows that *inter partes* reexamination of a United States Patent is only authorized when a consideration of prior art consisting of patents or printed publications establishes that there is a reasonable likelihood that the requester will prevail with respect to at least one of the claims challenged in the request. In particular, 35 USC 311(a) requires that a request for *inter partes* reexamination be based upon prior art as set forth in 35 USC 301, that is, prior art consisting of patents or printed publications, while 37 CFR 1.915(b)(3) requires that a request for *inter partes* reexamination include "a statement ... showing that there is a reasonable likelihood that the requester will prevail with respect to at least one of the claims challenged in the request."

Section 6(c)(3)(A) of the Leahy-Smith America Invents Act amended 35 USC 312 and 313 to delete any reference to the SNQ standard, and provide, in place of each deletion, language requiring the information presented in a request for *inter partes* reexamination (filed pursuant to 35 USC 311) to show that there is a reasonable likelihood that the requester will prevail with respect to at least one of the claims challenged in the request. With respect to the reasonable likelihood standard, House Rep. 112–98 (Part 1), 112th Cong., 1st Sess., provides, in connection with *inter partes* review, the following:

> ''The threshold for initiating an inter partes review is elevated from 'significant new question of patentability'—a standard that currently allows 95% of all requests to be granted—to a standard requiring petitioners to present information showing that their challenge has a reasonable likelihood of success.'' H.R. Rep. No. 112–98 (Part 1), at 47.

Similarly, with respect to the reasonable likelihood standard, a Senate debate in the Congressional Record at S1375 (March 8, 2011), 112th Cong., 1st Sess., provides, in connection with *inter partes* review, the following:

> ''Among the most important protections for patent owners added by the present bill are its elevated thresholds for instituting inter partes and post-grant reviews. The present bill dispenses with the test of ''substantial new question of patentability,'' a standard that currently allows 95% of all requests to be granted. It instead imposes thresholds that require petitioners to present information that creates serious doubts about the patent's validity. ...

[1] Public Law 112-29, 125 Stat. 284 (2011).

> ...The "reasonable likelihood" test is currently used in evaluating whether a party is entitled to a preliminary injunction, and effectively requires the petitioner to present a prima facie case justifying a rejection of the claims in the patent."

To implement this change to the standard of granting an *inter partes* reexamination request, the Office revised the rules of practice for *inter partes* reexamination by amending 37 CFR 1.915, 1.923, 1.927, and 1.931 to delete any reference to the SNQ standard for granting reexamination, and insert in its place reference to the newly enacted "reasonable likelihood" standard. See "Revision of Standard for Granting an Inter Partes Reexamination Request: Final Rule," 76 Fed. Reg. 59055 (Sept. 23, 2011). The relevant regulations, as amended, appear in subsection II.

IV. Analysis of the Request for Reexamination of the '127 patent

The Request in the instant proceeding sets forth the following proposed rejections or grounds:

1. Claims 1-3, 5, 7, and 12 are anticipated under 35 U.S.C. § 102(b) over Beutler et al.
2. Claims 8, 9, 11, and 13 are obvious under 35 U.S.C. § 103(a) over Beutler et al.
3. Claims 1-3, 5, and 7-13 are obvious under 35 USC §103(a) over Saier et al. in view of Thors et al. and further in view of Chiang et al. and Liu et al.
4. Claims 4 and 6 are obvious under 35 USC §103(a) over Saier et al. in view of Thors et al., further in view of Chiang et al. and Liu et al., and further in view of Xu.
5. Claims 1-13 are obvious under 35 USC §103(a) over Xu in view of Thors et al. and further in view of Chiang et al. and Liu et al.
6. Claims 1-13 are obvious under 35 U.S.C. § 103(a) over Schuez et al in view of Xu.

The Request was granted-in-part in the January 10, 2012 determination ordering *Inter Partes* Reexamination for claims 1-7 and 12 of the '127 patent. The determination found that the grounds 2, 3, and 5 did not raise a reasonable likelihood of prevailing for claims 8-11 and 13 and that ground 6 did not raise a reasonable likelihood of prevailing for claims 1-13. The petition addresses ground 2, grounds 3 & 5, and ground 6. As explained above, this decision will not address ground 6 because it raises issues regarding claim 1, which is a claim for which reexamination was granted. This decision will follow the format established by the petition to address ground 2 and grounds 3 & 5 together.

Ground 2 - Beutler:

Upon review of the record, the examiner's finding that the request failed to raise a reasonable likelihood of prevailing for claims 8-11 and 13 is correct. Section 6(c)(3)(A) of the Leahy-Smith America Invents Act provides a provision under which a request for *inter partes* reexamination will not be granted unless the information presented in the request shows that there is a reasonable likelihood that the requester will prevail with respect to at least one of the claims

challenged in the request. In order to show a reasonable likelihood of prevailing, the request, in view of the prior art, must set forth a proposed ground of rejection for a claim(s) that addresses each and every limitation set forth in the claim(s).

Upon review of the order, the examiner found that Beutler fails to disclose each and every limitation of claims 8-11 and 13. Specifically, the examiner found that Beutler fails to disclose the claimed width of the lateral fins and the ratio of the lateral fin width to lateral fin pitch (claims 8, 9, and 13). See pages 5-6 in the order. The examiner made findings that the reliance on the apparent size of the lateral projections 22, as shown in Figures 10 and 12 of Beutler, was not sufficient to teach the claimed limitations. Ground 2 relies on Beutler teaching or rendering obvious every limitation in claims 8-11 and 13 under 35 USC 103(a). Specifically, the request relies upon Figure 10, case law, and "obvious design choice" to teach the lateral fin width and the ratio limitations in claims 8, 9, and 13. See pages 9-13 of the request. Claims 10 and 11 depend on claim 9, and therefore, incorporate all the limitations of claim 9. Because the request failed to show that Beutler teaches or renders obvious every limitation of claims 8-11 and 13, the examiner found that there was not a reasonable likelihood of prevailing on any claim set forth in Ground 2.

In response to the examiner's findings, the petition argues, based on case law and MPEP 2144.04, that where a claim differs from a prior art reference only in recitation of relative dimensions, and where the device having the claimed relative dimensions would not perform differently than the prior art device, the claimed device is not patentably distinct from the prior art device. Petitioner recognizes that the examiner found that the specification of the '127 patent disclosed a teaching regarding the significance of the claimed dimensions, but disputes that this reason is sufficiently specific to require that patentable weight be given to the claimed dimensions. See pages 10-13 of the petition. In addition, petitioner advances that the specification of the '127 patent by using terms such as "may be" or "preferably" supports their position that patentable weight should not be given to the claimed dimensions. These arguments are newly raised in the petition, and therefore, will not be specifically addressed in this decision. Petitioner also argues that nothing in the record of the '127 patent suggests that the claimed dimensions cause the claimed invention to function differently than the prior art. In essence, petitioner is arguing that the claimed dimensions or ratio needs not be taught by the prior art to render the claims unpatentable.

Petitioner's arguments are not persuasive for the following reasons. The requirement that the request must present a reasonable likelihood of prevailing (RLP) on at least one claim places the initial burden of proof on the requester. Therefore, requester must have established that the claimed invention would not perform differently than the prior art in order to reasonably apply relevant case law. Upon review, the request fails to provide any such showing, but instead, generally relies upon case law and "obvious design choice." See pages 9-13 of the request. For example, see page 11 of the request that states "[t]he width of the lateral projections is an obvious design choice and within the range of widths fairly suggested by Beutler." The following text clearly relies upon the relative dimensions shown in Figure 10, assumptions based on the disclosure of the tool size, and general case law citations. This explanation is not a

reasonable showing that the claimed dimensions are within the ordinary skill in the art. As discussed above, the examiner specifically found that the request did not make the required showing to establish a reasonable likelihood of prevailing. In other words, the record is clear that the examiner considered the request but found that the specification of the '127 patent provided sufficient criticality to the claimed limitations. In summary, the record does not support that the request met this initial burden, e.g., made a showing of unpatentability to the extent that there was a reasonable likelihood of prevailing for at least one patent claim.

Thus, the examiner correctly determined that there was no reasonable likelihood that requester would prevail on Ground 2.

Grounds 3 and 5:

Upon review of the record, the examiner's finding that the request failed to raise a reasonable likelihood of prevailing for claims 8-11 and 13 is correct. Section 6(c)(3)(A) of the Leahy-Smith America Invents Act provides a provision under which a request for *inter partes* reexamination will not be granted unless the information presented in the request shows that there is a reasonable likelihood that the requester will prevail with respect to at least one of the claims challenged in the request. In order to show a reasonable likelihood of prevailing, the request, in view of the prior art, must set forth a proposed ground of rejection for a claim(s) that addresses each and every limitation set forth in the claim(s).

Upon review of the order, the examiner found that Saier in view of Thors, Chiang, and Lui fails to disclose each and every limitation of claims 8-11 and 13. See page 7 of the order. In addition, the examiner found that Xu in view of Thors, Chian, and Lui fails to disclose each and every limitation of claims 8-11 and 13. See pages 8-9 of the order. Specifically, the examiner found that the cited references fail to disclose the claimed width of the lateral fins (claims 8, 9, and 13). See pages 7-8 in the order. The examiner made findings that the reliance on Chiang's statement that "the width of the lateral projection is not particularly limited or significant" was not sufficient to teach the claimed width of the lateral fins. Grounds 3 and 5 rely on the above-mentioned Chiang's teaching and a case law citation in order to teach the claimed width. See pages 17 and 24 of the request. Claims 10 and 11 depend on claim 9, and therefore, incorporate all the limitations of claim 9. Because the request failed to show that the cited references render obvious teaches every limitation of claims 8-11 and 13, the examiner found that there was not a reasonable likelihood of prevailing on claims 8-11 and 13 set forth in Grounds 3 and 5.

In response to the examiner's findings, the petition relies upon the arguments presented in regard to Ground 2. For the same reasons discussed above for Ground 2, petitioner's arguments are not persuasive that the examiner erred in his determination.

Therefore, the examiner correctly determined that the cited references fails to disclose each and every limitation of claims 8-11 and 13, and accordingly, correctly determined based on this finding, that there was no likelihood that requester would prevail on claims 8-11 and 13 set forth in grounds 3 and 5.

The *de novo* review on the record of the request for reexamination in the '840 reexamination proceeding, undertaken in light of the arguments presented in the petition supports the conclusion that the request for reexamination did not establish that there is a reasonable likelihood that the requester will prevail with respect to claims 8-11 and 13 in the '127 patent for which reexamination was requested. Accordingly, the petition is denied.

CONCLUSION

1. Based on a *de novo* review of the record as a whole, the PETITION is DENIED.

2. This decision is final and nonappealable. 37 CFR 1.927. No further communication on this matter will be acknowledged or considered.

3. Telephone inquiries related to this decision should be directed to Eileen Lillis, Supervisory Patent Examiner, at (571) 272-6928, or Andy Kashnikow, Supervisory Patent Examiner, at (571) 272-4361.

Irem Yucel
Director
Central Reexamination Unit

UNITED STATES PATENT AND TRADEMARK OFFICE

UNITED STATES DEPARTMENT OF COMMERCE
United States Patent and Trademark Office
Address: COMMISSIONER FOR PATENTS
P.O. Box 1450
Alexandria, Virginia 22313-1450
www.uspto.gov

APPLICATION NO.	FILING DATE	FIRST NAMED INVENTOR	ATTORNEY DOCKET NO.	CONFIRMATION NO.
95/001,857	12/19/2011	7851188	GEVO-055/03US 310142-2278	1006

23906 7590 04/11/2012

E I DU PONT DE NEMOURS AND COMPANY
LEGAL PATENT RECORDS CENTER
BARLEY MILL PLAZA 25/1125
4417 LANCASTER PIKE
WILMINGTON, DE 19805

EXAMINER

ART UNIT	PAPER NUMBER

DATE MAILED: 04/11/2012

Please find below and/or attached an Office communication concerning this application or proceeding.

UNITED STATES PATENT AND TRADEMARK OFFICE

Commissioner for Patents
United States Patents and Trademark Office
P.O.Box 1450
Alexandria, VA 22313-1450
www.uspto.gov

DO NOT USE IN PALM PRINTER

THIRD PARTY REQUESTER'S CORRESPONDENCE ADDRESS
COOLEY LLP
777 6th STREET, NW
SUITE 1100
WASHINGTON, DC 20001

Date:

MAILED
APR 11 2012
CENTRAL REEXAMINATION UNIT

Transmittal of Communication to Third Party Requester
Inter Partes Reexamination

REEXAMINATION CONTROL NO. : 95001857
PATENT NO. : 7851188
TECHNOLOGY CENTER : 3999
ART UNIT : 3991

Enclosed is a copy of the latest communication from the United States Patent and Trademark Office in the above identified Reexamination proceeding. 37 CFR 1.903.

Prior to the filing of a Notice of Appeal, each time the patent owner responds to this communication, the third party requester of the inter partes reexamination may once file written comments within a period of 30 days from the date of service of the patent owner's response. This 30-day time period is statutory (35 U.S.C. 314(b)(2)), and, as such, it cannot be extended. See also 37 CFR 1.947.

If an ex parte reexamination has been merged with the inter partes reexamination, no responsive submission by any ex parte third party requester is permitted.

All correspondence relating to this inter partes reexamination proceeding should be directed to the Central Reexamination Unit at the mail, FAX, or hand-carry addresses given at the end of the communication enclosed with this transmittal.

UNITED STATES PATENT AND TRADEMARK OFFICE

Commissioner for Patents
United States Patent and Trademark Office
P.O. Box 1450
Alexandria, VA 22313-1450
www.uspto.gov

(For Patent Owner)

E I DU PONT DE NEMOURS AND COMPANY
LEGAL PATENT RECORDS CENTER
BARLEY MILL PLAZA 25/1125
4417 LANCASTER PIKE
WILMINGTON, DE 19805

MAILED

APR 11 2012

CENTRAL REEXAMINATION UNIT

(For Requester)

COOLEY LLP
ATTN: PATENT GROUP
777 6th STREET, NW SUITE 1100
WASHINGTON, DC 20001

In re Donaldson et al.
Reexamination Proceeding
Control No. 95/001,857
Filed: December 19, 2011
For: U.S. Patent No. 7,851,188

: DECISION ON
: PETITION UNDER
: 37 CFR 1.181

The patent owner filed a paper on March 19, 2012 entitled "PETITION OF PATENT OWNER UNDER 37 CFR §§ 1.181 AND/OR 1.183 TO VACATE THE ORDER GRANTING SECOND REEXAMINATION REQUEST" (hereinafter the petition). Petitioner, the patent owner, seeks review of the Order Granting Request for *Inter Partes* Reexamination mailed March 5, 2012. The requester filed a petition on April 2, 2012 in opposition of the March 19, 2012 petition. The petitions are before the Director of the Central Reexamination Unit (CRU).

The March 19, 2012 petition is **DISMISSED**.

The April 2, 2012 opposition petition is **GRANTED** to the extent that patent owner's petition is dismissed.

REVIEW OF FACTS

1. U.S. Patent No. 7,851,188 (hereinafter, the '188 patent) issued on December 14, 2010.

2. A request for inter partes reexamination was filed on August 18, 2011. The resulting reexamination proceeding was assigned Control No. 95/001,718 (hereinafter, the '718 proceeding). Reexamination was requested for claims 1-3, 13- 15, 17-24 and 34-37 of the '188 patent based upon 15 patents and publications.

3. An order denying the request for reexamination of claims 1-3, 13- 15, 17-24 and 34-37 in the '718 proceeding was mailed on October 27, 2011.

4. On November 28, 2011, the third party requester in the '718 proceeding filed a petition under 37 C.F.R. §§ 1.181 and 1.927 for supervisory review of the order denying request for reexamination.

5. A second request for inter partes reexamination of the '188 patent was filed on December 19, 2011. The resulting reexamination proceeding was assigned Control No. 95/001,857 (hereinafter, the '857 proceeding). Reexamination was requested for claims 1-3, 13-15, 17-24 and 34-37 of the '188 patent based upon 26 patents and publications, as well as a declaration by Dr. Gregory Stephanopoulous.

6. A decision denying the requester's petition in the '718 proceeding was mailed March 5, 2012.

7. An order granting reexamination in the '857 proceeding was mailed, together with a non-final Office action, on March 5, 2012.

8. On March 19, 2012, patent owner filed the present petition under 37 C.F.R. § 1.181 in the '857 proceeding.

9. On April 2, 2012, the third party requester filed a petition in opposition of the March 19, 2012 petition in the '857 proceeding.

Petitioner's Grounds in Support of the Requested Relief

Petitioner (the patent owner) alleges that the examiner's granting of the request for reexamination is improper because the examiner incorrectly concluded that the requester established a reasonable likelihood of prevailing. Patent owner alleges that, in granting the request for reexamination in the '857 proceeding, the Office took action

where it had no discretion to act because no substantial new question of patentability (SNQ) was found in the '718 proceeding.[1]

APPLICABLE STATUE(S) AND RULE(S)

35 U.S.C. § 312 provides

> (a) REEXAMINATION. – Not later than 3 months after the filing of a request for inter parted reexamination under section 311, the Director shall determine whether the information presented in the request shows that there is a reasonable likelihood that the requester would prevail with respect to at least 1 of the claims challenged in the request, with or without consideration of other patents or printed publications. A showing that there is a reasonable likelihood that the requester would prevail with respect to at least 1 of the claims challenged in the request is not precluded by the fact that a patent or printed publication was previously cited by or to the Office or considered by the Office. (Emphasis added.)

35 U.S.C. § 313 provides

> If, in a determination made under section 312(a), the Director finds that it has been shown that there is a reasonable likelihood that the requester would prevail with respect to at least 1 of the claims challenged in the request, the determination shall include an order for inter partes reexamination of the patent for resolution of the question. The order may be accompanied by the initial action of the Patent and Trademark Office on the merits of the inter partes reexamination conducted in accordance with section 314.

37 C.F.R. § 1.915(b)(3) provides

> A statement pointing out, based on the cited patents and printed publications, each showing of a reasonable likelihood that the requester will prevail with respect to at least one of the claims challenged in the request, and a detailed explanation of the pertinency and manner of applying the patents and printed publications to every claim for which reexamination is requested.

37 C.F.R. § 1.923 provides

> Within three months following the filing date of a request for *inter partes* reexamination under 1.915, the examiner will consider the request and determine whether or not the request and the prior art establish a

[1] The criteria for granting *inter partes* reexamination changed September 16, 2011 with passage of the America Invents Act.

> reasonable likelihood that the requester will prevail with respect to at least one of the claims challenged in the request. The examiner's determination will be based on the claims in effect at the time of the determinations, will become a part of the official file of the patent, and will be mailed to the patent owner at the address as provided in 1.33(c) and to the third party requester. If the examiner determines that the request has not established a reasonable likelihood that the requester will prevail with respect to at least one of the challenged claims, the examiner shall refuse the request and shall not order *inter partes* reexamination.

37 C.F.R. § 1.931 provides

> (a) If it is found that there is a reasonable likelihood that the requester will prevail with respect to at least one of the claims challenged in the request, the determination will include an order for inter partes reexamination of the patent for resolution of the question of whether the requester will prevail.

DECISION

Patent owner petitions under 37 C.F.R § 1.181(a)(3) to vacate the order granting reexamination mailed on March 5, 2012 as an *ultra vires* act. Petitioner asserts that the Office does not have jurisdiction to initiate or continue this reexamination because, according to patent owner, the rejections proposed by the request for reexamination rely on the same teachings which were considered in the prior reexamination request.

Patent owner relies upon the policy set forth in MPEP § 2616, which discusses the requirement for the request to include "a statement pointing out each substantial question of patentability ..." under 37 C.F.R. § 1.915(b)(3) to support the argument that because there is no new teachings presented in the request, the Office had no discretion to order the reexamination. Under the "substantial new question of patentability" (SNQ) standard, a request must present a question of patentability that is substantially different from those raised in the previous examination of the patent before the Office. Patent owner reasons that since the request was filed after the recent enactment of the America Invents Act of 2011 which "elevated" the threshold for determining whether there should be an order granting the request for reexamination from the SNQ standard to the "reasonable likelihood to prevail" (RLP) standard, the request should fail because it does not pass the SNQ threshold which is lower that the RLP threshold.

Patent owner's reliance on the SNQ standard is misplaced. As patent owner noted, for *inter partes* reexamination, the SNQ standard has been replaced with the RLP standard. The relevant rules of practice have been revised accordingly and are reproduced above. (See "Revision of Standard for Granting an Inter Partes Reexamination Request", 76 Fed. Reg. 185 September 23, 2011.) Whether the issue

being brought forth for consideration has been addressed in a previous Office proceeding does not preclude reexamination under the current standard for ordering *inter partes* reexamination. See the second sentence of 35 U.S.C. 312(a) emphasized above. Under 35 U.S.C. § 312, the Office has the discretion to reconsider issues that have been addressed in the past, provided the estoppel provisions of 35 U.S.C. 317 do not apply. The determination of whether the questions presented in the request are new is no longer a prerequisite to the determination of whether to order *inter partes* reexamination.[2]

After a review of the present record, and based upon the above discussion, it is found that petitioner patent owner has not shown the Office to have "clearly exceeded its statutory authority" nor acted "in brazen defiance of its statutory authorization" in the Office's determination to order re-examination. See *Heinl v Godici*, (E.D.Va. 2001), 143 F. Supp. 2d 593. Accordingly, patent owner's petition does not demonstrate that the granting of *inter partes* reexamination was *ultra vires,* and therefore, the petition is dismissed.

CONCLUSION

1. Petitioner's request to vacate the reexamination is **dismissed.**

2. The requester's opposition petition is **granted** to the extent that patent owner's petition is dismissed.

3. Telephone inquiries related to this decision should be directed to Deborah Jones, Supervisory Patent Examiner, at (571) 272-1535, or in her absence to the undersigned at (571) 272-0700.

Irem Yucel
Director
Central Reexamination Unit

[2] Accordingly, this decision does not address the arguments in requester's opposition that the issues raised are new because such determination is not relevant to deciding this petition.

UNITED STATES PATENT AND TRADEMARK OFFICE

UNITED STATES DEPARTMENT OF COMMERCE
United States Patent and Trademark Office
Address: COMMISSIONER FOR PATENTS
P.O. Box 1450
Alexandria, Virginia 22313-1450
www.uspto.gov

APPLICATION NO.	FILING DATE	FIRST NAMED INVENTOR	ATTORNEY DOCKET NO.	CONFIRMATION NO.
95/001,932	03/09/2012	6745513	54936.030008	3601

7590 03/30/2012

EXAMINER	

ART UNIT	PAPER NUMBER

Philip M. Weiss
WEISS & WEISS
410 Jericho Turnpike
Suite 105
Jericho, NY 11753

DATE MAILED: 03/30/2012

Please find below and/or attached an Office communication concerning this application or proceeding.

UNITED STATES PATENT AND TRADEMARK OFFICE

Commissioner for Patents
United States Patents and Trademark Office
P.O.Box 1450
Alexandria, VA 22313-1450
www.uspto.gov

DO NOT USE IN PALM PRINTER

THIRD PARTY REQUESTER'S CORRESPONDENCE ADDRESS

Jeff B. Vockrodt
HUNTON & WILLAMS LLP, IP DEPT.
2200 Pennsylvania Ave., NW
Washington, DC 20037

Date: 3-30-12

Transmittal of Communication to Third Party Requester
Inter Partes Reexamination

REEXAMINATION CONTROL NO. : 95001932
PATENT NO. : 6745513
TECHNOLOGY CENTER : 3999
ART UNIT : 3993

Enclosed is a copy of the latest communication from the United States Patent and Trademark Office in the above identified Reexamination proceeding. 37 CFR 1.903.

Prior to the filing of a Notice of Appeal, each time the patent owner responds to this communication, the third party requester of the inter partes reexamination may once file written comments within a period of 30 days from the date of service of the patent owner's response. This 30-day time period is statutory (35 U.S.C. 314(b)(2)), and, as such, it cannot be extended. See also 37 CFR 1.947.

If an ex parte reexamination has been merged with the inter partes reexamination, no responsive submission by any ex parte third party requester is permitted.

All correspondence relating to this inter partes reexamination proceeding should be directed to the Central Reexamination Unit at the mail, FAX, or hand-carry addresses given at the end of the communication enclosed with this transmittal.

UNITED STATES PATENT AND TRADEMARK OFFICE

Commissioner for Patents
United States Patent and Trademark Office
P.O. Box 1450
Alexandria, VA 22313-1450
www.uspto.gov

MAILED

MAR 30 2012

CENTRAL REEXAMINATION UNIT

Philip M. Weiss
Weiss & Weiss
410 Jericho Turnpike
Suite 105
Jericho, NY 11753

(For Patent Owner)

Jeff B. Vockrodt
Hunton & Williams LLP, IP Dept.
2200 Pennsylvania Avenue, N.W.
Washington, DC 20037

(For Third-Party Requester)

Inter Partes Reexamination Proceeding
Control No. 95/001,932
Request Deposited: March 9, 2012
For: U.S. Patent No.6,745,513

: **DECISION**
: **DISMISSING**
: **PETITION**
: **AS MOOT**

This is a decision on third party requester's March 21, 2012 petition entitled "Petition to Waive 37 C.F.R. § 1.939 to Provide Substitute Copies Having Higher Quality Scanned Images". The petition is before the Office of Patent Legal Administration.

In light of the decision vacating the filing date of this proceeding issued on even date herewith, the petition is dismissed as moot.

Pinchus M. Laufer
Senior Legal Advisor
Office of Patent Legal Administration

03-29-2012

UNITED STATES PATENT AND TRADEMARK OFFICE

Commissioner for Patents
United States Patent and Trademark Office
P.O. Box 1450
Alexandria, VA 22313-1450
www.uspto.gov

WOLFF BREGMAN AND GOLLER
P.O. BOX 1352
JERUSALEM, 91013
ISRAEL

MAILED

NOV 01 2010

PCT LEGAL ADMINISTRATION

In re Application of	:	
BEN GURION UNIVERSITY OF THE NEGEV	:	DECISION ON
RESEARCH AND DEVELOPMENT AUTHORITY	:	
PCT No.: PCT/IL09/00883	:	PETITION UNDER
Int. Filing Date: 10 September 2009	:	
Priority Date: 11 September 2008	:	37 CFR 1.183
Attorney's Docket No.: BGU-P-70808 PCT	:	
For: COMPOSITIONS AND METHODS FOR	:	
TREATING S.PNEUMONIAE INFECTION	:	

This is in response applicants' "Petition to Invoke the Supervisory Authority of the Director of the USPTO in Circumstances Arising in PCT Operations and/or the Office of PCT Legal Administration" under 37 CFR 1.183, filed 08 September 2010.

BACKGROUND

On 02 November 2009, applicants filed international application PCT/IL09/00883, including, *inter alia*, a copy of a sequence listing in paper and in computer readable form (CRF).

On 31 March 2009, the ISA/US mailed Form PCT/ISA/225, "Invitation to Furnish Nucleotide and/or Amino Acid Sequence Listing and to Pay, Where Applicable, Late Furnishing Fee," requiring a nucleotide and/or amino acid sequence listing in electronic form complying with the standard provided for in Annex C of the Administrative Instructions, accompanied by a statement to the effect that the sequence listing does not go beyond the disclosure in the international application as filed. The accompanying "CRF Problem Report" indicated that the CRF was not saved in ASCII text.

On 20 April 2010, applicants filed a sequence listing in computer readable form, together with a statement that "the computer readable form containing the nucleic acid and/or amino acid sequences contains the same information which was submitted as the paper copy of the Sequence Listing."

On 28 April 2010, a "CRF Problem Report" was placed in the file, which indicated "Please see screenshot enclosed. CRF contains (2) .TXT files." One file was entitled "SEQ ID P-70808-PC 15apr10.txt" and the second file was entitled "SEQ ID P-70808-PCT_ST25.txt." No sequence listing was uploaded into the database, and no validation of any sequence listing was performed to determine compliance with Annex C of the PCT Administrative Instructions.

On 09 July 2010, the ISA/US issued an International Search Report and Written Opinion of the International Searching Authority indicating that "Claims 1-35 and 37 were unsearchable because no valid CRF was filed in response to the ISA/225 of 31 March 2009."

On 08 September 2010, applicants submitted a "Petition to Invoke the Supervisory Authority of the Director of the USPTO in Circumstances Arising in PCT Operations and/or the Office of PCT Legal Administration" requesting that "applicable regulations are suspended or waived by the Director and...that the Director direct the International Searching Authority to conduct a full and meaningful search of the subject Application."

DISCUSSION

Petitioners indicate that a CD-ROM containing a CRF copy of the sequence listing, with a file name of "SEQ ID P-70808-PC 15apr10.txt," in the appropriate ST.25 text format was timely filed on 15 April 2010. Petitioners argue that "Section 40 of the Handbook On Industrial Property Information and Documentation regarding the Standards-ST.25 section" (identical to paragraph 40 of Annex C of the PCT Administrative Instructions) requires that "any sequence listing in electronic form shall be contained within one electronic file" and that "such requirement has been fully satisfied," since that paragraph "does not literally preclude the presence of an additional electronic file being contained on the digital medium."

37 CFR 1.821(h) states that "[i]f any of the requirements of paragraphs (b) through (f) of this section are not satisfied at the time of filing an international application under the Patent Cooperation Treaty (PCT), which application is to be searched by the United States International Searching Authority...applicant will be sent a notice necessitating compliance with the requirements within a prescribed time period...[i]f applicant fails to timely provide the required computer readable form, the United States International Searching Authority shall search only to the extent that a meaningful search can be performed without the computer readable form...". Therefore, the requirements of 37 CFR 1.821(b)–(f) apply to international applications searched by the United States International Searching Authority.

37 CFR 1.821(e) states that a copy of the sequence listing "must also be submitted in computer readable form (CRF) in accordance with the requirements of § 1.824." 37 CFR 1.824 states that "[t]he computer readable form shall contain a **single** "Sequence Listing" as either a diskette, series of diskettes, or other permissible media outlined in paragraph (c) of this section" (emphasis added). This requirement is entirely consistent with PCT Rule 13*ter*.1(a) which states that "Where the international application contains disclosure of one or more nucleotide and/or amino acid sequences, the International Searching Authority may invite the applicant to furnish

to it, for the purposes of the international search, **a sequence listing** in electronic form complying with the standard provided for in the Administrative Instructions..." (emphasis added). While paragraph 4 of Annex C of the Administrative Instructions may not literally preclude the presence of an additional electronic file being contained on the digital medium, both the U.S. and PCT Regulations do preclude such presence, particularly where that additional electronic file is a non-identical sequence listing.

In addition, paragraph 4(v) of Annex C of the Administrative Instructions states that a sequence listing "furnished in electronic form together with the international application, **shall be identical to the sequence listing as contained in the application** and be accompanied by a statement that 'the information recorded in electronic form furnished under Rule 13*ter* is identical to the sequence listing as contained in the international application'" (emphasis added). Together with the CRF submission on CD, a cover letter indicated, "[e]nclosed herewith please fine one digital copy of the Sequence Listing, as well as a statement attesting to the identical content between **the** digital copy and the paper copy provided with the application as originally filed" (emphasis added). The statement indicated in pertinent part that "I hereby certify that **the** computer readable form containing the nucleic acid and/or amino acid sequences contains the same information which was submitted as the paper copy of the Sequence Listing" (emphasis added). The CD provided on 15 April 2010 contained 2 files in .txt format; one file was entitled "SEQ ID P-70808-PC 15apr10.txt" and the second file was entitled "SEQ ID P-70808-PCT_ST25.txt." The two files were not identical. Both the cover letter and the statement referred to a **single** digital copy of the sequence listing; however, neither the cover letter nor the statement identified which of the two non-identical text files is identical to the paper copy of the sequence listing. Therefore, the Annex C requirement for a statement of identity between the information recorded in electronic form and the sequence listing contained in the international application has not been satisfied.

Petitioners further argue that "the electronic file bearing the same date in its title and saved on the same date as the accompanying letter should be searched, which...could be readily identified by the Examiner as being the intended file for search purposes." As indicated above, the letter referenced a single digital copy and did not specify any file name. Petitioner argues that the electronic file bearing the same date in its title and saved on the same date as the letter should be searched; however, an equal argument could be made that an electronic file containing "ST25" in its title would contain the electronic sequence listing in ST.25 format that should be searched. Because the CD contained two sequence listing text files, in contradiction to the applicable U.S. and PCT regulations and Annex C of the Administrative Instructions, rendering the record unclear as to which of two non-identical files should be used for search, neither file was uploaded and neither file was validated for compliance with Annex C of the PCT Administrative Instructions. Consequently, neither file was viewable by the examiner or capable of being searched in response to a potential request by the examiner. Contrary to petitioner's assertion, the record contains no evidence that any electronic file satisfies the requirements of Annex C of the PCT Administrative Instructions or the applicable U.S. or PCT regulations, and therefore, no search could be carried out.

Finally, Petitioners "submit that such circumstances represent an extraordinary situation, where justice would dictate that any applicable regulations are suspended or waived by the Director...". Page 2 of the instant petition indicates that "a second extraneous file [was] apparently inadvertently included in error...".

MPEP 513, Section III states that "A party's inadvertent failure to comply with the requirements of a rule is not deemed to be an extraordinary situation that would warrant waiver of a rule under 37 CFR 1.183...See *Honigsbaum v. Lehman*, 903 F. Supp. 8, 37 USPQ2d 1799 (D.D.C. 1995) (Commissioner did not abuse his discretion in refusing to waive requirements of 37 CFR 1.10(c) in order to grant filing date to patent application, where applicant failed to produce "Express Mail" customer receipt or any other evidence that application was actually deposited with USPS as Express Mail."), *aff'd without opinion*, 95 F.3d 1166 (Fed. Cir. 1996); *Nitto Chemical Industry. Co., Ltd. v. Comer*, 39 USPQ2d 1778, 1782 (D.D.C. 1994) (Commissioner's refusal to waive requirements of 37 CFR 1.10 in order to grant priority filing date to patent application not arbitrary and capricious, because failure to comply with the requirements of 37 CFR 1.10 is an "avoidable" oversight that could have been prevented by the exercise of ordinary care or diligence, and thus not an extraordinary situation under 37 CFR 1.183.); *Vincent v. Mossinghoff*, 230 USPQ 621 (D.D.C. 1985) (misunderstanding of 37 CFR 1.8 not unavoidable delay in responding to Office Action); *Gustafson v. Strange*, 227 USPQ 174 (Comm'r Pat. 1985) (counsel's unawareness of 37 CFR 1.8 not extraordinary situation warranting waiver of a rule); *In re Chicago Historical Antique Automobile Museum, Inc.*, 197 USPQ 289 (Comm'r Pat. 1978) (since certificate of mailing procedure under 37 CFR 1.8 was available to petitioner, lateness due to mail delay not deemed to be extraordinary situation)."

In response to an invitation to furnish a nucleotide and/or amino acid sequence listing in electronic form complying with the standard provided for in Annex C of the Administrative Instructions, a CD "apparently inadvertently" containing two non-identical sequence listing files was provided. That submission does not comply with 37 CFR 1.824, PCT Rule 13*ter*.1(a), or Annex C of the Administrative Instructions; however petitioners request that the Director suspend or waive any applicable regulations under 37 CFR 1.183. United States case law holds that an inadvertent failure to comply with the requirements of a rule is not deemed to be an extraordinary situation that would warrant the waiver of a rule under 37 CFR 1.183. Furthermore, 37 CFR 1.183 does not apply to the waiver of a Regulation or the Administrative Instructions under the PCT. Therefore, claims 1-35 and 37 will not be searched by the United States International Searching Authority.

CONCLUSION

The petition under 37 CFR 1.183 is DISMISSED.

Please direct further correspondence with respect to this matter to Mail Stop PCT, Commissioner for Patents, Office of PCT Legal Administration, P.O. Box 1450, Alexandria, Virginia 22313-1450, with the contents of the letter marked to the attention of the Office of PCT Legal Administration.

Susan C. Wolski
PCT Special Programs Examiner
Office of Patent Cooperation Treaty
Legal Administration
Telephone: (571) 272-3304
Facsimile: (571) 273-0459

Boris Milef
PCT Legal Examiner
Office of Patent Cooperation Treaty
Legal Administration

UNITED STATES PATENT AND TRADEMARK OFFICE

Commissioner for Patents
United States Patent and Trademark Office
P.O. Box 1450
Alexandria, VA 22313-1450
www.uspto.gov

WOLFF BREGMAN AND GOLLER
P.O. BOX 1352
JERUSALEM, 91013
ISRAEL

MAILED
JAN 18 2011
PCT LEGAL ADMINISTRATION

In re Application of	:	
BEN GURION UNIVERSITY OF THE NEGEV	:	DECISION ON
RESEARCH AND DEVELOPMENT AUTHORITY	:	
PCT No.: PCT/IL09/00922	:	PETITION UNDER
Int. Filing Date: 24 September 2009	:	
Priority Date: 29 September 2008	:	37 CFR 1.183
Attorney's Docket No.: BGU-P-9802-PC1	:	
For: AMYLOID BETA-PEPTIDES AND	:	
METHODS OF USE THEREOF	:	

This is in response applicants' "Petition to Invoke the Supervisory Authority of the Director of the USPTO in Circumstances Arising in PCT Operations and/or the Office of PCT Legal Administration" under 37 CFR 1.183, filed 04 October 2010.

BACKGROUND

On 24 September 2009, applicants filed international application PCT/IL09/00922, including, *inter alia*, a copy of a sequence listing on paper.

On 17 March 2010, the ISA/US mailed Form PCT/ISA/225, "Invitation to Furnish Nucleotide and/or Amino Acid Sequence Listing and to Pay, Where Applicable, Late Furnishing Fee," requiring a nucleotide and/or amino acid sequence listing in electronic form complying with the standard provided for in Annex C of the Administrative Instructions, accompanied by a statement to the effect that the sequence listing does not go beyond the disclosure in the international application as filed.

On 19 April 2010, applicants filed a sequence listing in computer readable form, together with a statement that "the computer readable form containing the nucleic acid and/or amino acid sequences contains the same information which is submitted as the paper copy of the Sequence Listing."

On 28 April 2010, a "CRF Problem Report" was placed in the file, which indicated "Please delete the end of file text as shown above."

On 08 July 2010, the ISA/US issued an International Search Report and Written Opinion of the International Searching Authority indicating that "Claims 1-60, 62-69, 71-79 are unsearchable, because no valid CRF was filed in response to the ISA/225 of 17 March 2010."

On 04 October 2010, applicants submitted a "Petition to Invoke the Supervisory Authority of the Director of the USPTO in Circumstances Arising in PCT Operations and/or the Office of PCT Legal Administration" requesting that "applicable regulations are suspended or waived by the Director and...that the Director direct the International Searching Authority to conduct a full and meaningful search of the subject Application."

DISCUSSION

Petitioners indicate that a CD-ROM containing a CRF copy of the sequence listing, "in the appropriate ST.25 text format" was received by the deadline. Petitioners state that "Applicants' representative was advised that the CD-ROM in question reportedly contained an extra character at the end of the sequence listing, resulting in an invalid CRF copy and therefore a meaningful search was not conducted." Applicants contends that "an electronic file was provided, which *essentially* satisfies the requirements in accordance with the standard provided in Annex C of the Administrative Instructions...albeit with the exception that an additional character was contained at the very end of the listing, which Applicants' submit could be readily identified by the Examiner and a proper search could have been conducted" (emphasis added).

The Introduction of Annex C of the PCT Administrative Instructions indicates that the Standard has been elaborated, in part, "to facilitate searching of sequence data and to allow the exchange of sequence data in electronic form and the introduction of sequence data onto computerized databases." Although Applicants' submit that the additional character contained in the sequence portion of SEQ. ID. No: 34 "could be readily identified by the Examiner and a proper search could have been conducted;" in fact, a sequence listing in electronic form is validated and uploaded to a computer database where it is searched. Sequences in a sequence listing are not identified and searched directly by an Examiner.

Successful uploading and searching of a sequence listing in a computer database requires that the listing must wholly, not *essentially*, comply with the requirements set forth in the Standard. Additional characters contained within the substantive portion of a listing can negatively affect not only the search of that particular sequence against the database, but also the search of every subsequently-filed sequence listing searched against that listing.

No sequence listing that fully complied with Annex C of the Administrative Instructions was provided in response to the Invitation; consequently, the non-compliant sequence listing provided was not uploaded and searched.

CONCLUSION

The petition under 37 CFR 1.183 is DISMISSED.

Please direct further correspondence with respect to this matter to Mail Stop PCT, Commissioner for Patents, Office of PCT Legal Administration, P.O. Box 1450, Alexandria, Virginia 22313-1450, with the contents of the letter marked to the attention of the Office of PCT Legal Administration.

Susan C. Wolski
PCT Special Programs Examiner
Office of Patent Cooperation Treaty
Legal Administration
Telephone: (571) 272-3304
Facsimile: (571) 273-0459

Boris Milef
PCT Legal Examiner
Office of Patent Cooperation Treaty
Legal Administration

UNITED STATES PATENT AND TRADEMARK OFFICE

MAILED

JUN 23 2011

PCT LEGAL ADMINISTRATION

Commissioner for Patents
United States Patent and Trademark Office
P.O. Box 1450
Alexandria, VA 22313-1450
www.uspto.gov

Michal Fisher
WEBB & CO.
P.O. Box 2189
76121 Rehovot
Israel

In re Application of: BIOCEP LTD.	:	PETITION
PCT Application No.: PCT/IL2011/000068	:	
International Filing Date: 20 January 2011	:	UNDER
Priority Date: 21 January 2010	:	
Attorney's Docket No.: BCP-002-PCT	:	
For: MAGNETIC SEPARATION OF RARE CELLS	:	37 CFR 1.181

This decision is in response to applicants' communication filed 31 May 2011, which has been treated as a petition under 37 C.F.R. 1.181. No petition fee is required.

BACKGROUND

On 20 May 2011, the United States International Searching Authority (ISA/US) issued Notification of Transmittal of the International Search Report and the Written Opinion of the International Searching Authority, or the Declaration (form PCT/ISA/220), International Search Report (form PCT/ISA/210), and Written Opinion of the International Searching Authority (form PCT/ISA/237) indicating thereon "MAGNETIC SEPARATION OF RARE CELLS" as the applicant.

On 31 May 2011, applicants filed the present petition requesting that the International Search Report and Written Opinion of the International Searching Authority be corrected as to recite "BIOCEP LTD" as the correct applicant

DISCUSSION

A review of the file reveals that the first named applicant in Box II of the PCT Request is BIOCEP LTD. Consequently, the ISA/US should have issued the forms PCT/ISA/220, PCT/ISA/210, and PCT/ISA/237 with the first named applicant "BIOCEP LTD" as the applicant.

CONCLUSION

For the reasons given above, the applicants' petition under 37 CFR 1.181 is **GRANTED**.

Corrected Notification of Transmittal of the International Search Report and the Written Opinion of the International Searching Authority, or the Declaration (form PCT/ISA/220), International Search Report (form PCT/ISA/210), and Written Opinion of the International Searching Authority (form PCT/ISA/237) are attached to this decision. A copy of this decision is being forwarded to the IB.

Boris Milef
PCT Legal Examiner
Office of PCT Legal Administration

Harry C. Kim
PCT Special Programs Examiner
Office of PCT Legal Administration
Telephone: (571) 272-3285

ATTACHMENT: Corrected Notification of Transmittal of the International Search Report and the Written Opinion of the International Searching Authority, or the Declaration (form PCT/ISA/220), International Search Report (form PCT/ISA/210), and Written Opinion of the International Searching Authority (form PCT/ISA/237)

CORRECTED

PATENT COOPERATION TREATY

From the INTERNATIONAL SEARCHING AUTHORITY

To:
CYNTHIA WEBB
WEBB & CO.
P.O. 2189
76121 REHOVOT
ISRAEL

PCT

NOTIFICATION OF TRANSMITTAL OF THE INTERNATIONAL SEARCH REPORT AND THE WRITTEN OPINION OF THE INTERNATIONAL SEARCHING AUTHORITY, OR THE DECLARATION

(PCT Rule 44.1)

	Date of mailing *(day/month/year)* 23 JUN 2011
Applicant's or agent's file reference BCP-002-PCT	**FOR FURTHER ACTION** See paragraphs 1 and 4 below
International application No. PCT/IL 11/00068	International filing date *(day/month/year)* 20 January 2011 (20.01.2011)
Applicant BIOCEP LTD.	

1. ☒ The applicant is hereby notified that the international search report and the written opinion of the International Searching Authority have been established and are transmitted herewith.

   Filing of amendments and statement under Article 19:
   The applicant is entitled, if he so wishes, to amend the claims of the international application (see Rule 46):

   When? The time limit for filing such amendments is normally two months from the date of transmittal of the international search report.

   Where? Directly to the International Bureau of WIPO, 34 chemin des Colombettes 1211 Geneva 20, Switzerland, Facsimile No.: +41 22 338 82 70

   For more detailed instructions, see *PCT Applicant's Guide*, International Phase, paragraphs 9.004 – 9.011.

2. ☐ The applicant is hereby notified that no international search report will be established and that the declaration under Article 17(2)(a) to that effect and the written opinion of the International Searching Authority are transmitted herewith.

3. ☐ **With regard to any protest** against payment of (an) additional fee(s) under Rule 40.2, the applicant is notified that:

   ☐ the protest together with the decision thereon has been transmitted to the International Bureau together with any request to forward the texts of both the protest and the decision thereon to the designated Offices.

   ☐ no decision has been made yet on the protest; the applicant will be notified as soon as a decision is made.

4. **Reminders**

   The applicant may submit comments on an informal basis on the written opinion of the International Searching Authority to the International Bureau. The International Bureau will send a copy of such comments to all designated Offices unless an international preliminary examination report has been or is to be established. Following the expiration of 30 months from the priority date, these comments will also be made available to the public.

   Shortly after the expiration of **18 months** from the priority date, the international application will be published by the International Bureau. If the applicant wishes to avoid or postpone publication, a notice of withdrawal of the international application, or of the priority claim, must reach the International Bureau before the completion of the technical preparations for international publication (Rules 90*bis*.1 and 90*bis*.3).

   Within **19 months** from the priority date, but only in respect of some designated Offices, a demand for international preliminary examination must be filed if the applicant wishes to postpone the entry into the national phase **until 30 months** from the priority date (in some Offices even later); otherwise, the applicant must, **within 20 months** from the priority date, perform the prescribed acts for entry into the national phase before those designated Offices.

   In respect of other designated Offices, the time limit of **30 months** (or later) will apply even if no demand is filed within 19 months.

   For details about the applicable time limits, Office by Office, see www.wipo.int/pct/en/texts/time_limits.html and the *PCT Applicant's Guide*, National Chapters.

Name and mailing address of the ISA/ Mail Stop PCT, Attn: ISA/US Commissioner for Patents P.O. Box 1450, Alexandria, Virginia 22313-1450	Authorized officer Lee W. Young
Facsimile No. 571-273-3201	Telephone No. PCT Helpdesk: 571-272-4300 PCT OSP: 571-272-7774

Form PCT/ISA/220 (July 2010)

CORRECTED

PATENT COOPERATION TREATY

PCT

INTERNATIONAL SEARCH REPORT

(PCT Article 18 and Rules 43 and 44)

Applicant's or agent's file reference BCP-002-PCT	FOR FURTHER ACTION	see Form PCT/ISA/220 as well as, where applicable, item 5 below.
International application No. PCT/IL 11/00068	International filing date *(day/month/year)* 20 January 2011 (20.01.2011)	(Earliest) Priority Date *(day/month/year)* 21 January 2010 (21.01.2010)
Applicant BIOCEP LTD.		

This international search report has been prepared by this International Searching Authority and is transmitted to the applicant according to Article 18. A copy is being transmitted to the International Bureau.

This international search report consists of a total of 2 sheets.

☐ It is also accompanied by a copy of each prior art document cited in this report.

1. **Basis of the report**

a. With regard to the **language**, the international search was carried out on the basis of:

☒ the international application in the language in which it was filed.

☐ a translation of the international application into _____ which is the language of a translation furnished for the purposes of international search (Rules 12.3(a) and 23.1(b)).

b. ☐ This international search report has been established taking into account the **rectification of an obvious mistake** authorized by or notified to this Authority under Rule 91 (Rule 43.6*bis*(a)).

c. ☐ With regard to any **nucleotide and/or amino acid sequence** disclosed in the international application, see Box No. I.

2. ☐ **Certain claims were found unsearchable** (see Box No. II).

3. ☐ **Unity of invention is lacking** (see Box No. III).

4. With regard to the **title**,

☒ the text is approved as submitted by the applicant.

☐ the text has been established by this Authority to read as follows:

5. With regard to the **abstract**,

☒ the text is approved as submitted by the applicant.

☐ the text has been established, according to Rule 38.2, by this Authority as it appears in Box No. IV. The applicant may, within one month from the date of mailing of this international search report, submit comments to this Authority.

6. With regard to the **drawings**,

a. the figure of the **drawings** to be published with the abstract is Figure No. 1

☐ as suggested by the applicant.

☒ as selected by this Authority, because the applicant failed to suggest a figure.

☐ as selected by this Authority, because this figure better characterizes the invention.

b. ☐ none of the figures is to be published with the abstract.

INTERNATIONAL SEARCH REPORT

International application No.
PCT/IL 11/00068

A. CLASSIFICATION OF SUBJECT MATTER
IPC(8) - C12M 1/42, 1/00 (2011.01)
USPC - 435/283.1
According to International Patent Classification (IPC) or to both national classification and IPC

B. FIELDS SEARCHED

Minimum documentation searched (classification system followed by classification symbols)
IPC(8): C12M 1/42, 1/00 (2011.01)
USPC: 435/283.1

Documentation searched other than minimum documentation to the extent that such documents are included in the fields searched

Electronic data base consulted during the international search (name of data base and, where practicable, search terms used)
PubWEST(PGPB, USPT, USOCR, EPAB, JPAB); Google Patents; Google Scholar
Search Terms: magnetized, separating, dividing, sorting, cells, nuclei, proteins, flux, pump, viability, vitality, heat, comparability, temperature, rare, purity, concentration, percentage, horizontal, vertical, degaussing, bubbles, vibration

C. DOCUMENTS CONSIDERED TO BE RELEVANT

Category*	Citation of document, with indication, where appropriate, of the relevant passages	Relevant to claim No.
Y	US 5,795,470 A (WANG et al.) 18 August 1998 (18.08.1998) col 1, ln 28-32; col 2, ln 39-45; col 8, ln 7-9; col 11, ln 52-56; col 12, ln 37-54; col 16, ln 19-22, 48-57; col 17, ln 10-16	1-39
Y	US 5,759,793 A (SCHWARTZ et al.) 02 June 1998 (02.06.1998) col 2, ln 29-31; col 11, ln 7-14	1-39
Y	US 6,013,188 A (TERSTAPPEN et al.) 11 January 2000 (11.01.2000) col 13, ln 55-59; col 18, ln 60-62; col 19, ln 10-13; col 23, ln 59-65	3, 4, 14-19, 32, 37
Y	US 2003/0159976 A1 (IWASAKI) 28 August 2003 (28.08.2003) para [0073], [0080], [0081]	13, 36
Y	US 6,143,577 A (BISCONTE SCONTE DE SAINT JULIEN) 07 November 2000 (07.11.2000) col 3, ln 58-67; col 7, ln 11-14; col 9, ln 8-15	20-25 and 29

☐ Further documents are listed in the continuation of Box C. ☐

* Special categories of cited documents:
"A" document defining the general state of the art which is not considered to be of particular relevance
"E" earlier application or patent but published on or after the international filing date
"L" document which may throw doubts on priority claim(s) or which is cited to establish the publication date of another citation or other special reason (as specified)
"O" document referring to an oral disclosure, use, exhibition or other means
"P" document published prior to the international filing date but later than the priority date claimed
"T" later document published after the international filing date or priority date and not in conflict with the application but cited to understand the principle or theory underlying the invention
"X" document of particular relevance; the claimed invention cannot be considered novel or cannot be considered to involve an inventive step when the document is taken alone
"Y" document of particular relevance; the claimed invention cannot be considered to involve an inventive step when the document is combined with one or more other such documents, such combination being obvious to a person skilled in the art
"&" document member of the same patent family

Date of the actual completion of the international search	Date of mailing of the international search report
04 May 2011 (04.05.2011)	23 JUN 2011
Name and mailing address of the ISA/US Mail Stop PCT, Attn: ISA/US, Commissioner for Patents P.O. Box 1450, Alexandria, Virginia 22313-1450 Facsimile No. 571-273-3201	Authorized officer: Lee W. Young PCT Helpdesk: 571-272-4300 PCT OSP: 571-272-7774

Form PCT/ISA/210 (second sheet) (July 2009)

CORRECTED

PATENT COOPERATION TREATY

From the
INTERNATIONAL SEARCHING AUTHORITY

To: CYNTHIA WEBB
WEBB & CO.
P.O. 2189
76121 REHOVOT
ISRAEL

PCT

WRITTEN OPINION OF THE
INTERNATIONAL SEARCHING AUTHORITY

(PCT Rule 43*bis*.1)

Date of mailing *(day/month/year)*	23 JUN 2011

Applicant's or agent's file reference	FOR FURTHER ACTION
BCP-002-PCT	See paragraph 2 below

International application No.	International filing date *(day/month/year)*	Priority date *(day/month/year)*
PCT/IL 11/00068	20 January 2011 (20.01.2011)	21 January 2010 (21.01.2010)

International Patent Classification (IPC) or both national classification and IPC
IPC(8) - C12M 1/42, 1/00 (2011.01)
USPC - 435/283.1

Applicant BIOCEP LTD.

1. This opinion contains indications relating to the following items:

- [X] Box No. I Basis of the opinion
- [ ] Box No. II Priority
- [ ] Box No. III Non-establishment of opinion with regard to novelty, inventive step and industrial applicability
- [ ] Box No. IV Lack of unity of invention
- [X] Box No. V Reasoned statement under Rule 43*bis*.1(a)(i) with regard to novelty, inventive step or industrial applicability; citations and explanations supporting such statement
- [ ] Box No. VI Certain documents cited
- [ ] Box No. VII Certain defects in the international application
- [ ] Box No. VIII Certain observations on the international application

2. **FURTHER ACTION**

If a demand for international preliminary examination is made, this opinion will be considered to be a written opinion of the International Preliminary Examining Authority ("IPEA") except that this does not apply where the applicant chooses an Authority other than this one to be the IPEA and the chosen IPEA has notified the International Bureau under Rule 66.1*bis*(b) that written opinions of this International Searching Authority will not be so considered.

If this opinion is, as provided above, considered to be a written opinion of the IPEA, the applicant is invited to submit to the IPEA a written reply together, where appropriate, with amendments, before the expiration of 3 months from the date of mailing of Form PCT/ISA/220 or before the expiration of 22 months from the priority date, whichever expires later.

For further options, see Form PCT/ISA/220.

3. For further details, see notes to Form PCT/ISA/220.

Name and mailing address of the ISA/US	Date of completion of this opinion	Authorized officer:
Mail Stop PCT, Attn: ISA/US Commissioner for Patents P.O. Box 1450, Alexandria, Virginia 22313-1450 Facsimile No. 571-273-3201	04 May 2011 (04.05.2011)	Lee W. Young PCT Helpdesk: 571-272-4300 PCT OSP: 571-272-7774

WRITTEN OPINION OF THE
INTERNATIONAL SEARCHING AUTHORITY

International application No.
PCT/IL 11/00068

Box No. 1 Basis of this opinion

1. With regard to the **language**, this opinion has been established on the basis of:

   ☒ the international application in the language in which it was filed.

   ☐ a translation of the international application into _____ which is the language of a translation furnished for the purposes of international search (Rules 12.3(a) and 23.1(b)).

2. ☐ This opinion has been established taking into account the **rectification of an obvious mistake** authorized by or notified to this Authority under Rule 91 (Rule 43*bis*.1(a))

3. With regard to any **nucleotide and/or amino acid sequence** disclosed in the international application, this opinion has been established on the basis of a sequence listing filed or furnished:

   a. (means)

      ☐ on paper

      ☐ in electronic form

   b. (time)

      ☐ in the international application as filed

      ☐ together with the international application in electronic form

      ☐ subsequently to this Authority for the purposes of search

4. ☐ In addition, in the case that more than one version or copy of a sequence listing has been filed or furnished, the required statements that the information in the subsequent or additional copies is identical to that in the application as filed or does not go beyond the application as filed, as appropriate, were furnished.

5. Additional comments:

WRITTEN OPINION OF THE
INTERNATIONAL SEARCHING AUTHORITY

International application No.
PCT/IL 11/00068

Box No. V **Reasoned statement under Rule 43*bis*.1(a)(i) with regard to novelty, inventive step or industrial applicability; citations and explanations supporting such statement**

1. Statement

Novelty (N)	Claims	1-39	YES
	Claims	NONE	NO
Inventive step (IS)	Claims	NONE	YES
	Claims	1-39	NO
Industrial applicability (IA)	Claims	1-39	YES
	Claims	NONE	NO

2. Citations and explanations:

Claims 1, 2, 5-12, 26-28, 30, 31, 33-35, 38 and 39 lack an inventive step under PCT Article 33(3) as being obvious over US 5,795,470 A to Wang et al. (hereinafter 'Wang') in view of US 5,759,793 A to Schwartz et al. (hereinafter 'Schwartz').

Regarding claim 1, Wang discloses a magnetic separation system structured to separate with high qualitative and quantitative yield magnetized cells from a fluid mixture of non-magnetized cells (col 1, ln 28-32), comprising:
(a) a plurality of electromagnets (col 12, ln 37-41 'magnets 827') structured to generate a magnetic field flux (col 12, ln 37-41 'opposing dipoles') about a plurality of zones (col 12, ln 46-54 'portions of the interior surface...adjacent to a pole') and sufficient to attract a majority of the magnetized cells in the mixture (col 12, ln 46-54 'magnetically-responsive particles are separated'); and
(b) an impelling pump (col 16, ln 55-57 'pump 1057') to drive the mixture at a determined and controlled flow rate (col 16, ln 55-57 'flow rate') in a tube disposed about the zones (col 16, ln 55-57 'plenum 1044'; also see Figs 10, 11), thereby separating a majority of the magnetized cells from the mixture onto the tube wall by the generated magnetic flux (col 17, ln 10-16 'magnetic components') while impeding the other cells from attaching on the tube wall (col 17, ln 10-16 'no significant entrapment of the non-magnetic component').
Wang does not specifically disclose sustaining the viability of the cells. However, Schwartz discloses a magnetic cell separating apparatus (abstract) capable of sustaining the viability of the cells (col 11, ln 7-14 'conditions that support cell life'). It would have been obvious to one of ordinary skill in the art to combine the system of Wang with the viability of Schwartz because both are directed towards cell separation (Schwartz col 2, ln 29-31) and the viability of Schwartz provides the ability for the cells to spend longer times in the separator (Schwartz col 2, ln 29-31).

Regarding claim 2, the combination of Wang and Schwartz discloses the system according to claim 1, and Schwartz further discloses wherein sustaining the viability of the cells comprises generating the magnetic field while avoiding heat dissipation detrimental to the vitality of the cells (col 7-14, specifically col 11, ln 7-10; 'require an operating temperature').

Regarding claim 5, the combination of Wang and Schwartz discloses the system according to claim 1, and Wang further discloses wherein the tube is disposed generally horizontally about the zones (col 11, ln 52-56).

Regarding claim 6, the combination of Wang and Schwartz discloses the system according to claim 1, and Wang further discloses wherein the plurality of zones are arranged about a generally horizontal plane for disposing the tube generally horizontally about the zones (col 11, ln 52-56).

Regarding claim 7, the combination of Wang and Schwartz discloses the system according to claim 1, and Wang further discloses wherein the tube is disposed generally vertically about the zones (col 11, ln 52-56).

Regarding claim 8, the combination of Wang and Schwartz discloses the system according to claim 1, and Wang further discloses wherein the plurality of zones are arranged about a generally vertical plane for disposing the tube generally horizontally about the zones (col 11, ln 52-56).

Regarding claim 9, the combination of Wang and Schwartz discloses the system according to claim 1, and Wang further discloses wherein an electromagnet is configured to generate a magnetic flux about two zones (col 8, ln 7-9).

Regarding claim 10, the combination of Wang and Schwartz discloses the system according to claim 1, and Wang further discloses wherein the tube is successively disposed about a plurality of consecutive zones (col 12, ln 46-54 'portions of the interior surface...adjacent to a pole'), each zone configured to attract onto the tube wall a majority of the magnetized rare cells successively remaining in the flowing mixture (col 12, ln 46-54 'magnetically-responsive particles are separated') while impeding the other cells from attaching on the tube wall (col 17, ln 10-16 'no significant entrapment of the non-magnetic component').

Regarding claim 11, the combination of Wang and Schwartz discloses the system according to claim 1, and Wang further discloses at least one mechanism to promote dislodging the separated magnetized cells off the tubes wall (col 16, ln 34-41 'separation vessel is removed' wherein removing the vessel comprises removing the magnetic fields acting on the cells).

-Please see continuation sheet-

WRITTEN OPINION OF THE
INTERNATIONAL SEARCHING AUTHORITY

International application No.
PCT/IL 11/00068

Supplemental Box

In case **the space in any of the preceding boxes is not sufficient.**
Continuation of:
Box V.2. Citations and Explanations

Regarding claim 12, the combination of Wang and Schwartz discloses the system according to claim 11, and Wang further discloses wherein the mechanism comprises degaussing the electromagnets and respective zones (col 16, ln 34-41 'separation vessel is removed' wherein removing the vessel comprises removing the magnetic fields acting on the cells).

Regarding claim 26, the combination of Wang and Schwartz discloses the system according to claim 1, and Wang further discloses wherein the fluid mixture is adapted to hinder movements of non-magnetized cells towards the tube wall (col 17, ln 10-16 'no significant entrapment of the non-magnetic component') while allowing the movement of the magnetized cells under the pull of the magnetic field flux about the zones (col 12, ln 46-54 'portions of the interior surface...adjacent to a pole').

Regarding claim 27, the combination of Wang and Schwartz discloses the system according to claim 1, and Schwartz further discloses wherein the carrier fluid is adapted to sustain the vitality of the cells (col 7-14, specifically col 11, ln 7-10; operated under conditions that support cell life; require an operating temperature').

Regarding claim 28, the combination of Wang and Schwartz discloses the system according to claim 1, but neither specifically discloses wherein the tube is biocompatible. However, Wang does disclose wherein cells accumulate on the surface of the tube (col 14, ln 55-59). It would have been obvious to one of ordinary skill in the art to provide a biocompatible tube to preserve viability of the accumulated cells.

Regarding claim 30, the combination of Wang and Schwartz discloses the system according to claim 1, and Wang further discloses wherein the magnetic flux is in the order of 1 Tesla (col 8, ln 7-9 '15-30 KGauss').

Regarding claim 31, Wang discloses a method for separating with high qualitative and quantitative yield magnetized cells from a fluid mixture of cells (col 1, ln 28-32), comprising: (a) providing a sample of cells comprising magnetized cells (col 2, ln 39-45); and
(b) flowing a mixture of the sample of cells in a carrier fluid inside a tube (col 16, ln 55-57 'plenum 1044') disposed about a magnetization zone having a magnetic flux (col 12, ln 37-41 'opposing dipoles'), generated by an electromagnet (col 12, ln 37-41 'magnets 827'), sufficient to attract a majority of the magnetized cells from the mixture onto the tube wall (col 12, ln 46-54 'magnetically-responsive particles are separated') while impeding other cells from attaching to the tube wall, thereby separating magnetized cells on the tube wall (col 17, ln 10-16 'no significant entrapment of the non-magnetic component').
Wang does not specifically disclose sustaining the vitality of the cells; and
avoiding heat dissipation detrimental to the cells.
However, Schwartz discloses a magnetic cell separating apparatus (abstract) capable of sustaining the vitality of the cells (col 11, ln 7-14 'conditions that support cell life'); and
avoiding heat dissipation detrimental to the cells (col 7-14, specifically col 11, ln 7-10 'require an operating temperature'). It would have been obvious to one of ordinary skill in the art to combine the method of Wang with the viability of Schwartz because both are directed towards cell separation (Schwartz col 2, ln 29-31) and the viability of Schwartz provides the ability for the cells to spend longer times in the separator (Schwartz col 2, ln 29-31).

Regarding claim 33, the combination of Wang and Schwartz discloses the method according to claim 31, and Wang further discloses terminating the magnetic flux and washing the separated magnetized cells out of the tube (col 16, ln 34-41 'separation vessel is removed' wherein removing the vessel comprises removing the magnetic fields acting on the cells).

Regarding claim 34, the combination of Wang and Schwartz discloses the method according to claim 33, and Wang further discloses concurrently or preceding activating a mechanism to promote dislodging the separated magnetized cells off the tube wall (col 16, ln 34-41 'separation vessel is removed' wherein removing the vessel comprises removing the magnetic fields acting on the cells).

Regarding claim 35, the combination of Wang and Schwartz discloses the method according to claim 34, and Wang further discloses wherein the mechanisms comprises degaussing the electromagnets and respective zones (col 16, ln 34-41 'separation vessel is removed' wherein removing the vessel comprises removing the magnetic fields acting on the cells).

Regarding claim 38, the combination of Wang and Schwartz discloses the method according to claim 31, and Wang further discloses wherein a magnetization zone comprises a plurality of zones (col 12, ln 46-54 'portions of the interior surface...adjacent to a pole').

Regarding claim 39, the combination of Wang and Schwartz discloses the method according to claim 31, and Wang further discloses wherein a zone comprises a plurality of consecutive zones on which the tube is successively disposed (col 12, ln 46-54 'portions of the interior surface...adjacent to a pole') and each zone is configured to attract onto the tube wall a majority of the magnetized cells successively remaining in the flowing mixture (col 12, ln 46-54 'magnetically-responsive particles are separated') while impeding the other cells from attaching on the tube wall (col 17, ln 10-16 'no significant entrapment of the non-magnetic component').

Claims 3, 4, 14-19, 32 and 37 lack an inventive step under PCT Article 33(3) as being obvious over Wang in view of Schwartz and in further view of US 6,013,188 A to Terstappen et al. (hereinafter 'Terstappan').

Regarding claim 3, the combination of Wang and Schwartz discloses the system according to claim 1, but neither specifically discloses wherein the system is configured to separate rare cells from a fluid mixture of cells having low abundance of the rare cells relative to the rest of the cells. However, Terstappen does disclose a system configured to separate rare cells from a fluid mixture of cells having low abundance of the rare cells relative to the rest of the cells (col 13, ln 55-59 'rare events'). It would have been obvious to one of ordinary skill in the art to combine the system of Wang and Schwartz with the cells of Terstappen because all are directed towards cell separation (Terstappen col 13, ln 55-59) and the cells of Terstappen provide greater marketability of the invention (Terstappen col 13, ln 55-59).

-Please see continuation sheet-

Supplemental Box

In case **the space in any of the preceding boxes is not sufficient.**
Continuation of:
Box V.2. Citations and Explanations

Regarding claim 4, the combination of Wang and Schwartz discloses the system according to claim 1, and Wang further discloses (a) a mixture container for preparing the fluid mixture of cells for supplying the tube (col 16, ln 55-57 'conduit 1054');
(b) a sample container for holding sample of cells (col 16, ln 48-51 'bag 1068');
(c) a carrier container for holding carrier fluid (col 16, ln 19-22 'bag 1050').
Neither specifically discloses (d) pumps for driving the sample of cells and carrier fluid into the mixture container independently of the impelling pump. However, Terstappen does disclose (d) pumps for driving the sample of cells and carrier fluid into the mixture container independently of the impelling pump (col 23, ln 59-63 'pumps'). It would have been obvious to one of ordinary skill in the art to combine the system of Wang and Schwartz with the pumps of Terstappen because all are directed towards cell separation (Terstappen col 23, ln 63-65) and the pumps of Terstappen provide an efficient supply of both sample and carrier fluid (Terstappen col 23, ln 59-63).

Regarding claim 14, the combination of Wang and Schwartz discloses the system according to claim 11, but neither specifically discloses wherein the mechanism comprises an apparatus to vibrate the tube. However, Terstappen does disclose wherein the mechanism comprises an apparatus to vibrate the tube (col 18, ln 60-62). It would have been obvious to one of ordinary skill in the art to combine the system of Wang and Schwartz with the vibration of Terstappen because all are directed towards cell separation (Terstappen col 19, ln 10-13) and the vibration of Terstappen provides ease in retrieving separated cells (col 18, ln 60-62).

Regarding claim 15, the combination of Wang and Schwartz discloses the system according to claim 1, but neither specifically discloses wherein the system is structured to provide a separation of the magnetized cells comprising at least 50% of the magnetized cells originally present in the mixture. However, Terstappen does disclose wherein the system is structured to provide a separation of the magnetized cells comprising at least 50% of the magnetized cells originally present in the mixture (col 13, ln 55-59 'virtually all target particles').

Regarding claim 16, the combination of Wang and Schwartz discloses the system according to claim 1, but neither specifically discloses wherein the system is structured to provide a separation of the magnetized cells comprising at least 60% of the magnetized cells originally present in the mixture. However, Terstappen does disclose wherein the system is structured to provide a separation of the magnetized cells comprising at least 60% of the magnetized cells originally present in the mixture (col 13, ln 55-59 'virtually all target particles').

Regarding claim 17, the combination of Wang and Schwartz discloses the system according to claim 1, but neither specifically discloses wherein the system is structured to provide a separation of the magnetized cells comprising at least 70% of the magnetized cells originally present in the mixture. However, Terstappen does disclose wherein the system is structured to provide a separation of the magnetized cells comprising at least 70% of the magnetized cells originally present in the mixture (col 13, ln 55-59 'virtually all target particles').

Regarding claim 18, the combination of Wang and Schwartz discloses the system according to claim 1, but neither specifically discloses wherein the system is structured to provide a separation of the magnetized cells comprising at least 80% of the magnetized cells originally present in the mixture. However, Terstappen does disclose wherein the system is structured to provide a separation of the magnetized cells comprising at least 80% of the magnetized cells originally present in the mixture (col 13, ln 55-59 'virtually all target particles').

Regarding claim 19, the combination of Wang and Schwartz discloses the system according to claim 1, but neither specifically discloses wherein the system is structured to provide a separation of the magnetized cells comprising at least 90% of the magnetized cells originally present in the mixture. However, Terstappen does disclose wherein the system is structured to provide a separation of the magnetized cells comprising at least 90% of the magnetized cells originally present in the mixture (col 13, ln 55-59 'virtually all target particles').

Regarding claim 32, the combination of Wang and Schwartz discloses the system according to claim 1, but neither specifically discloses wherein the magnetized cells are rare cells having low abundance relative to the rest of the cells in the mixture. However, Terstappen does disclose wherein the magnetized cells are rare cells having low abundance relative to the rest of the cells in the mixture (col 13, ln 55-59 'rare events'). It would have been obvious to one of ordinary skill in the art to combine the method of Wang and Schwartz with the cells of Terstappen because all are directed towards cell separation (Terstappen col 13, ln 55-59) and the cells of Terstappen provide greater marketability of the invention (Terstappen col 13, ln 55-59).

Regarding claim 37, the combination of Wang and Schwartz discloses the method according to claim 34, but neither specifically discloses wherein the mechanisms comprises an apparatus to vibrate the tube. However, Terstappen does disclose wherein the mechanisms comprises an apparatus to vibrate the tube (col 18, ln 60-62). It would have been obvious to one of ordinary skill in the art to combine the method of Wang and Schwartz with the vibration of Terstappen because all are directed towards cell separation (Terstappen col 19, ln 10-13) and the vibration of Terstappen provides ease in retrieving separated cells (col 18, ln 60-62).

Claims 13 and 36 lack an inventive step under PCT Article 33(3) as being obvious over Wang in view of Schwartz and in further view of US 2003/0159976 A1 (Iwasaki).

Regarding claim 13, the combination of Wang and Schwartz discloses the system according to claim 11, but neither specifically discloses wherein the mechanism comprises an apparatus to flow an air bubble in a fluid inside the tube. However, Iwasaki discloses a separation apparatus and method for use in separating magnetic material from non-magnetic material (abstract) wherein the mechanism comprises an apparatus to flow an air bubble in a fluid inside a tube (para [0080] 'bubble generation assembly 240'). It would have been obvious to one of ordinary skill in the art to combine the system of Wang and Schwartz with the flow of Iwasaki because both are directed towards magnetic separation (Iwasaki para [0073]) and the flow of Iwasaki provides ease in retrieving separated particles (Iwasaki para [0081]).

-Please see continuation sheet-

WRITTEN OPINION OF THE
INTERNATIONAL SEARCHING AUTHORITY

International application No.
PCT/IL 11/00068

Supplemental Box

In case **the space in any of the preceding boxes is not sufficient.**
Continuation of:
Box V.2. Citations and Explanations

Regarding claim 36, the combination of Wang and Schwartz discloses the method according to claim 34, but neither specifically discloses wherein the mechanisms comprises apparatus to flow an air bubble in a fluid inside the tube. However, Iwasaki discloses a separation apparatus and method for use in separating magnetic material from non-magnetic material (abstract) wherein the mechanisms comprises apparatus to flow an air bubble in a fluid inside the tube (para [0080] 'bubble generation assembly 240'). It would have been obvious to one of ordinary skill in the art to combine the method of Wang and Schwartz with the flow of Iwasaki because both are directed towards magnetic separation (Iwasaki para [0073]) and the flow of Iwasaki provides ease in retrieving separated particles (Iwasaki para [0081]).

Claims 20-25 and 29 lack an inventive step under PCT Article 33(3) as being obvious over Wang in view of Schwartz and in further view of US 6,143,577 A (Bisconte Sconte de Saint Julien).

Regarding claim 20, the combination of Wang and Schwartz discloses the system according to claim 1, but neither specifically discloses wherein the system is structured to provide a concentration of magnetized cells above 60% of the separated cells recovered from the mixture. However, Bisconte Sconte de Saint Julien discloses a process for magnetic immunoseparation of cells wherein the system is structured to provide a concentration of magnetized cells at a high percentage of the separated cells recovered from the mixture (col 9, ln 8 -15 'concentration of the rare cells'). It would have been obvious to one of ordinary skill in the art to combine the system of Wang and Schwartz with the concentration of Bisconte Sconte de Saint Julien because all are directed towards cell separation (Bisconte Sconte de Saint Julien col 3, ln 58-67) and the concentration of Bisconte Sconte de Saint Julien provides ease in taking a culture of the magnetized cells (Bisconte Sconte de Saint Julien col 9, ln 8-15). Further, it would have been obvious to one of ordinary skill in the art to provide a concentration above 60% in order to increase the reliability of the taken culture (Bisconte Sconte de Saint Julien col 9, ln 8-15).

Regarding claim 21 the combination of Wang and Schwartz discloses the system according to claim 1, but neither specifically discloses wherein the system is structured to provide a concentration of magnetized cells above 70% of the separated cells recovered from the mixture. However, Bisconte Sconte de Saint Julien does disclose wherein the system is structured to provide a concentration of magnetized cells at a high percentage of the separated cells recovered from the mixture (col 9, ln 8-15 'concentration of the rare cells'). It would have been obvious to one of ordinary skill in the art to combine the system of Wang and Schwartz with the concentration of Bisconte Sconte de Saint Julien because all are directed towards cell separation (Bisconte Sconte de Saint Julien col 3, ln 58-67) and the concentration of Bisconte Sconte de Saint Julien provides ease in taking a culture of the magnetized cells (Bisconte Sconte de Saint Julien col 9, ln 8-15). Further, it would have been obvious to one of ordinary skill in the art to provide a concentration above 70% in order to increase the reliability of the taken culture (Bisconte Sconte de Saint Julien; col 9, ln 8-15).

Regarding claim 22, the combination of Wang and Schwartz discloses the system according to claim 1, but neither specifically discloses wherein the system is structured to provide a concentration of magnetized cells above 80% of the separated cells recovered from the mixture. However, Bisconte Sconte de Saint Julien does disclose wherein the system is structured to provide a concentration of magnetized cells at a high percentage of the separated cells recovered from the mixture (col 9, ln 8-15 'concentration of the rare cells'). It would have been obvious to one of ordinary skill in the art to combine the system of Wang and Schwartz with the concentration of Bisconte Sconte de Saint Julien because all are directed towards cell separation (Bisconte Sconte de Saint Julien col 3, ln 58-67) and the concentration of Bisconte Sconte de Saint Julien provides ease in taking a culture of the magnetized cells (Bisconte Sconte de Saint Julien col 9, ln 8-15). Further, it would have been obvious to one of ordinary skill in the art to provide a concentration above 80% in order to increase the reliability of the taken culture (Bisconte Sconte de Saint Julien col 9, ln 8-15).

Regarding claim 23, the combination of Wang and Schwartz discloses the system according to claim 1, but neither specifically discloses wherein the system is structured to provide a concentration of magnetized cells above 90% of the separated cells recovered from the mixture. However, Bisconte Sconte de Saint Julien does disclose wherein the system is structured to provide a concentration of magnetized cells at a high percentage of the separated cells recovered from the mixture (col 9, ln 8-15 'concentration of the rare cells'). It would have been obvious to one of ordinary skill in the art to combine the system of Wang and Schwartz with the concentration of Bisconte Sconte de Saint Julien because all are directed towards cell separation (Bisconte Sconte de Saint Julien col 3, ln 58-67) and the concentration of Bisconte Sconte de Saint Julien provides ease in taking a culture of the magnetized cells (Bisconte Sconte de Saint Julien col 9, ln 8-15). Further, it would have been obvious to one of ordinary skill in the art to provide a concentration above 90% in order to increase the reliability of the taken culture (Bisconte Sconte de Saint Julien col 9, ln 8-15).

Regarding claim 24, the combination of Wang and Schwartz discloses the system according to claim 1, but neither specifically discloses wherein the system is structured to provide a concentration of magnetized cells above 95% of the separated cells recovered from the mixture. However, Bisconte Sconte de Saint Julien does disclose wherein the system is structured to provide a concentration of magnetized cells at a high percentage of the separated cells recovered from the mixture (col 9, ln 8-15 'concentration of the rare cells'). It would have been obvious to one of ordinary skill in the art to combine the system of Wang and Schwartz with the concentration of Bisconte Sconte de Saint Julien because all are directed towards cell separation (Bisconte Sconte de Saint Julien col 3, ln 58-67) and the concentration of Bisconte Sconte de Saint Julien provides ease in taking a culture of the magnetized cells (Bisconte Sconte de Saint Julien col 9, ln 8-15). Further, it would have been obvious to one of ordinary skill in the art to provide a concentration above 95% in order to increase the reliability of the taken culture (Bisconte Sconte de Saint Julien col 9, ln 8-15).

-Please see continuation sheet-

WRITTEN OPINION OF THE
INTERNATIONAL SEARCHING AUTHORITY

International application No.
PCT/IL 11/00068

Supplemental Box

In case **the space in any of the preceding boxes is not sufficient.**

Continuation of:
Box V.2. Citations and Explanations

Regarding claim 25, the combination of Wang and Schwartz discloses the system according to claim 1, but neither specifically discloses wherein the system is structured to provide a concentration of magnetized cells above 98% of the separated cells recovered from the mixture. However, Bisconte Sconte de Saint Julien does disclose wherein the system is structured to provide a concentration of magnetized cells at a high percentage of the separated cells recovered from the mixture (col 9, ln 8-15 'concentration of the rare cells'). It would have been obvious to one of ordinary skill in the art to combine the system of Wang and Schwartz with the concentration of Bisconte Sconte de Saint Julien because all are directed towards cell separation (Bisconte Sconte de Saint Julien col 3, ln 58-67) and the concentration of Bisconte Sconte de Saint Julien provides ease in taking a culture of the magnetized cells (Bisconte Sconte de Saint Julien col 9, ln 8-15). Further, it would have been obvious to one of ordinary skill in the art to provide a concentration above 98% in order to increase the reliability of the taken culture (Bisconte Sconte de Saint Julien col 9, ln 8-15).

Regarding claim 29, the combination of Wang and Schwartz discloses the system according to claim 1, but neither specifically discloses wherein the pumps are peristaltic pumps. However, Bisconte Sconte de Saint Julien does disclose wherein the pumps are peristaltic pumps (col 7, ln 11-14 'peristatic [sic] pump'). It would have been obvious to one of ordinary skill in the art to combine the system of Wang and Schwartz with the pump of Bisconte Sconte de Saint Julien because all are directed towards cell separation (Bisconte Sconte de Saint Julien col 3, ln 58-67) and the pump of Bisconte Sconte de Saint Julien provides a reliable pressure flow through the separator (Bisconte Sconte de Saint Julien col 7, ln 11-14).

Claims 1-39 have industrial applicability as defined by PCT Article 33(4) because the subject matter can be made or used in industry.

UNITED STATES PATENT AND TRADEMARK OFFICE

COMMISSIONER FOR PATENTS
UNITED STATES PATENT AND TRADEMARK OFFICE
P.O. BOX 1450
ALEXANDRIA, VA 22313-1450
www.uspto.gov

PEGGY A. SU
AKA CHAN LLP
900 LAFAYETTE STREET, SUITE 710
SANTA CLARA, CA 95050

MAILED
JUL 12 2011
PCT LEGAL ADMINISTRATION

In re Application of :
NIKON CORPORATION et al :
Application No.: PCT/US2005/025958 : DECISION ON PETITION
Filing Date: July 21, 2005 : UNDER 37 CFR 1.78(a)(3)
Attorney Docket No.: NCRAP028PCT :

This is a decision on the petition under 37 CFR 1.78(a)(3), filed July 1, 2011, to accept an unintentionally delayed claim under 35 U.S.C. 120 for the benefit of priority to a prior-filed nonprovisional application.

The petition is **DISMISSED**.

A petition for acceptance of a late claim for priority under 37 CFR 1.78(a)(3) is only applicable to those applications filed on or after November 29, 2000. Further, the petition is appropriate only after the expiration of the period specified in 37 CFR 1.78(a)(2)(ii). In addition, the petition under 37 CFR 1.78(a)(3) must be accompanied by:

(1) the reference required by 35 U.S.C. 120 and 37 CFR 1.78(a)(2)(i) of the prior-filed application, unless previously submitted;
(2) the surcharge set forth in 37 CFR 1.17(t); and
(3) a statement that the entire delay between the date the claim was due under 37 CFR 1.78(a)(2)(ii) and the date the claim was filed was unintentional. The Director may require additional information where there is a question whether the delay was unintentional.

The petition does not satisfy item (1) above in that an amendment adding the required reference has not been furnished.

Before the petition under 37 CFR 1.78(a)(3) can be granted, a proper amendment (complying with the provisions of 37 CFR 1.121) to correct the above matter is required.

Any further correspondence with respect to this matter may be filed electronically via EFS-Web selecting the document description "Petition for review and processing by the PCT Legal Office"

or by mail addressed to Mail Stop PCT, Commissioner for Patents, Office of PCT Legal Administration, P.O. Box 1450, Alexandria, Virginia 22313-1450, with the contents of the letter marked to the attention of the Office of PCT Legal Administration.

Bryan Lin
Legal Examiner
Office of PCT Legal Administration
(571) 272-3303

UNITED STATES PATENT AND TRADEMARK OFFICE

Commissioner for Patents
United States Patent and Trademark Office
P.O. Box 1450
Alexandria, VA 22313-1450
www.uspto.gov

MAILED

FEB 23 2012

PCT LEGAL ADMINISTRATION

Daniel J. Chalker
Chalker Flores, LLP
2711 LBJ Freeway, Suite 1036
Dallas, Texas 75234

In re Application of :
BAYLOR RESEARCH INSTITUTE :
PCT No.: PCT/US2006/046862 :
Int. Filing Date: 09 December 2006 : DECISION ON PETITION
Priority Date: 09 December 2005 : UNDER 37 CFR 1.182
Attorney Docket No.:BHCS:2064 :
For: DIAGNOSIS, PROGNOSIS AND MONITORING OF DISEASE PROGRESSION OF SYSTEMIC LUPUS ERYTHEMATOSUS THROUGH BLOOD LEUKOCYTE MICROARRAY ANALYSIS :

This decision is issued in response to applicant's "Petition under 37 CFR §1.182" filed on 15 December 2011. Additionally, this decision is in response to applicant's "Amended Petition under 27 CFR 1.182" filed on 03 January 2012. Applicant has paid the applicable petition fee.

BACKGROUND

On 09 December 2006, applicant initiated the present international application by filing, a PCT Request (Form PCT/RO/101) and accompanying materials. Box IX of the PCT Request identified the contents of the international application as follows: Request (04 pages); Description (57 pages); Claims (09 pages); Abstract (1 page); and drawings (29 pages) for a total of 100 pages, and the international application as filed included these itemized materials. Additionally, the computer program materials contained on the CD-R discs were itemized on the PCT Request as part of the international application and were not submitted in paper form.

On 15 December 2011 (and 03 January 2012), applicant filed the present "Petition Under 37 CFR §1.182" considered herein. Applicant requests entry and publication of the tables submitted on compact disc with the above-referenced International Patent Application filed on December 9, 2006 by way of Express Mail. Applicant included two compact discs with the present petition.

DISCUSSION

The present petition under 37 CFR 1.182 requests that the accompanying tables furnished via compact disc be accepted as part of the international application as filed on the international filing date. As noted above, a paper copy of these tables were not included with the international application as filed. Rather, applicant asserts that the tables were contained on two duplicate compact discs included with the filed international application and that the submission of the compact discs constitutes an acceptable filing of such materials.[1]

Although the RO/US did not notify the International Bureau (IB) that it was prepared to accept applications filed under Administrative Instructions (AI) § 801(a), the RO/US did accept applications in a particular case pursuant to AI § 801(c) provided certain guidelines were followed.

> Applicant shall submit a paper copy of the complete international application, with the exception that the sequence listing part and/or tables part is provided on electronic media rather than on paper. Four (4) copies of the sequence listing part and/or **three (3) copies of the tables part are to be included with the application**, each copy of an electronic medium or set of electronic media if additional capacity is needed.

In this case, applicant submitted only TWO compact discs containing a copy of the tables to be part of the application sequence listing together with "Communication Regarding Sequence Information" which indicated that the tables should be considered "as part of the above-named International application" which is sufficient to warrant acceptance of the application under AI § 801(c). In view of the fact that applicant has now complied with substantially all of the USPTO's requirements[2] for acceptance of a sequence listing in electronic form, it would be appropriate under petition under 37 CFR 1.182 to accept the tables listing as part of the international application.

It is noted that applicant submitted only two compact discs with the present petition, therefore, applicant is required to submit an additional compact disc, pursuant to Administrative Instructions (AI) § 801. Upon submission of the third compact disc, the compact discs will be forwarded to the International Bureau. Applicant should request republication of the international application with the International Bureau.

---

[1] It is noted that, while USPTO records confirm receipt of the compact discs on the international filing date, the discs are not present in the application file. However, based on applicant's statements in the present petition and the materials filed on 15 December 2011, the duplicate Compact discs included with applicants' 15 December 2011 submission, which are present in the application file and do contain tables, are accepted as identical to the compact discs filed by applicants on the international filing date.

[2] Applicant did not submit the "Compact Disc Transmittal Sheet for Submission of Sequence Listing and/or Tables to the United States Receiving Office under PCT Administrative Instructions - Part 8."

CONCLUSION

For the reasons above, the petition under 37 CFR 1.182 is GRANTED.

Applicant must submit an additional compact disc within ONE (1) MONTH from the mail date of this decision.

Any further correspondence with respect to this matter should be directed to Mail Stop PCT, Commissioner for Patents, Office of PCT Legal Administration, P.O. Box 1450, Alexandria, Virginia 22313-1450, with the contents of the letter marked to the attention of the Office of PCT Legal Administration or electronically filed utilizing the USPTO's EFS-Web electronic filing system.

Upon submission the third copy of the compact dics, a copy of this decision and one compact disc containing tables will be sent to the International Bureau.

Anthony Smith
Attorney-Advisor
Office of PCT Legal Administration
Tel: (571) 272-3298
Fax: (571) 273-0459

UNITED STATES PATENT AND TRADEMARK OFFICE

Commissioner for Patents
United States Patent and Trademark Office
P.O. Box 1450
Alexandria, VA 22313-1450
www.uspto.gov

Michael J. Sweedler
DARBY & DARBY P.C.
P.O. Box 770
Church Street Station
New York, NY 10008-0770

MAILED
MAR 07 2012
PCT LEGAL ADMINISTRATION

In re Application of
GERMGARD LIGHTING, LLC
PCT No.: PCT/US06/60263
Int. Filing Date: 26 October 2006
Priority Date: 26 October 2005
Agent's File Reference: 2203469-WO0
For: HAND SANITIZER

DECISION UNDER
37 CFR 1.181

Applicants' 14 February 2012 communication is being treated as a petition under 37 CFR 1.181 requesting correction of the international filing date from 25 October 2006 to 26 October 2006. No petition fee is required. The petition is **GRANTED.**

BACKGROUND

On 26 October 2006, applicants filed international application PCT/US06/60263 via EFS-Web, which claimed priority to a U.S. application filed 26 October 2005.

On 12 January 2007, The United States Receiving Office (RO/US) mailed, inter alia, a "NOTIFICATION OF THE INTERNATIONAL APPLICATION NUMBER AND OF THE INTERNATIONAL FILING DATE" (Form PCT/RO/105) indicating a 25 October 2006 international filing date.

On 14 February 2012, applicants filed the present petition informing the RO/US that the 25 October 2006 international filing date as indicated on the Form PCT/RO/105 mailed 12 January 2007 is incorrect and should be changed to 26 October 2006.

DISCUSSION

A review of the Electronic Acknowledgement Receipt reveals that international application PCT/US06/60263 was filed in the USPTO on 26 October 2006. Therefore, the 25 October 2006 international filing date as indicated on the Form PCT/RO/105 mailed 12 January 2007 is incorrect. The correct international filing date for the present international application is 26 October 2006.

CONCLUSION

Applicants' 14 February 2012 petition to correct the international filing date from 25 October 2006 to 26 October 2006 is hereby **GRANTED.** The Form PCT/RO/105 mailed 12 January 2007 is hereby **VACATED.**

A copy of this decision along with a corrected Form PCT/RO/105 indicating a 26 October 2006 international filing date are being sent to the International Bureau.

Bryan Lin
PCT Legal Examiner
Office of PCT Legal Administration

Jeremy Fleming
Paralegal Specialist
Office of PCT Legal Administration

Telephone (571) 272-3284
Facsimile (571) 273-0459

JSF/BL:jf

Enclosures: copy of corrected Form PCT/RO/105.

UNITED STATES PATENT AND TRADEMARK OFFICE

COMMISSIONER FOR PATENTS
UNITED STATES PATENT AND TRADEMARK OFFICE
P.O. BOX 1450
ALEXANDRIA, VA 22313-1450
www.uspto.gov

INTELLECTUAL PROPERTY DEVELOPMENT
JACK IVAN J'MAEV
14175 TELEPHONE AVE., SUITE L
CHINO CA 91710

MAILED
JUN 17 2011
PCT LEGAL ADMINISTRATION

In re Application of :
STOYANOV *et al* :
PCT No.: PCT/US2007/018609 :
Int. Filing Date: 22 August 2007 :
Priority Date: 23 August 2006 : DECISION
Atty. Docket No.: LMC-002-PCT :
For: METHOD AND APPARTUS FOR :
FILTERED AND CONTROLED :
FLOW METAL MODING :

This is a decision on applicants' "RENEWED PETITION UNDER 37 CFR 1.137(b)" filed in the U.S. Patent and Trademark Office (USPTO) on 03 July 2010 and resubmitted on 26 January 2011.

BACKGROUND

On 22 August 2007, applicants filed international application No. PCT/US2007/018609 which claimed a priority date of 23 August 2006, and which designated the United States.

The deadline for submission of a copy of the international application (unless previously communicated by the International Bureau) and payment of the basic national fee expired 30 months from the priority date, i.e. 23 February 2009.

A review of USPTO records reveals that there are two national application files related to the present international application:

12/658,772 which is a national application filed under 35 U.S.C. 111; and
12/733,199 which is a national stage application filed under 35 U.S.C. 371.

The initial filings in both applications were received in the USPTO on 08 February 2010.

USPTO records indicate the following about the two applications:

Application No. 12/658,772

A review of USPTO records indicate that on 08 February 2010, applicants filed a UTILITY PATENT APPLICATION TRANSMITTAL (Form PTO/SB/05) for a filing of a application under 37 CFR 1.53(b). The transmittal indicated an attorney docket no. of LMC-002-US.

USPTO records also indicate that the 08 February 2010 submission was accompanied by, *inter alia*, a specification, claims, and drawings, a declaration of the inventors executing the international application, a petition requesting that the international application be revived, the requisite petition fee of $810 and a fee for a terminal disclaimer of $65.

On 05 April 2010, the USPTO issued a decision which dismissed the petition to revive on the grounds that the 1st paragraph of the specification did not set forth the relationship between the '772 application and the '609 application as is required in an application filed under 35 U.S.C. 111 (37 CFR 1.53(b)) for a proper benefit claim under 35 U.S.C. 120.

On 02 June 2010, the USPTO mailed a NOTICE TO FILE MISSING PARTS OF A NONPROVISIONAL APPLICATION FILED UNDER 37 CFR 1.53(b) indicating that $610 in national application fees were required.

On 16 February 2011, the USPTO mailed a NOTICE OF ABANDONMENT UNDER 37 CFR 1.53(f) or (g) indicating that the '772 application was held to be abandoned for failure to respond to the 02 June 2010 Notice.

Application No. 12/733,199

A review of USPTO records indicate that on 08 February 2010, applicants filed a TRANSMITTAL LETTER TO THE UNITED STATES DESIGNATED/ELECTED OFFICE (DO/EO/US) CONCERNING A SUBMISSION UNDER 35 U.S.C. 371 (Form PTO-1390) for a filing of a national stage application under 35 U.S.C. 371. The transmittal letter indicated an attorney docket no. of LMC-002-PCT.

USPTO records also indicate that the 08 February 2010 submission was accompanied by, *inter alia*, a declaration of the inventors executing the international application, and $455 in national stage filing fees.

On 04 March 2010, the DO/EO/US mailed a NOTIFICATION OF ACCEPTANCE OF APPLICATION UNDER 35 U.S.C. 371 AND 37 CFR 1.495 (Form PCT/DO/EO/903) which improperly indicated that the application had been accepted as satisfying the requirements for national stage entry under 35 U.S.C. 371.

On 12 May 2010, the DO/EO/US mailed a NOTIFICATION OF ABANDONMENT (Form PCT/DO/EO/909) which indicated that the application was held to be abandoned. The Notification incorrectly set forth the reason for abandonment as failing "to provide a copy of the International Application by 30 months." The Notification should have instead indicated that applicant had failed to pay the Basic National Fee by 30 months. The Notification was

accompanied by a "Letter Regarding a New Notice and/or Status of the Application" (Form PCT/DO/EO/WITH) indicating that the 04 March 2010 Notification should be disregarded.

DISCUSSION

A review of the comments in the present renewed petition, coupled with the above facts reveals that there is apparently some confusion regarding the status of the present international application, its relation to the above discussed two national applications, and which of the two national applications in which applicants desire for the petition to revive to be considered. For example, the arguments presented in the renewed petition seem to imply that it is applicants' belief that the petition to revive as well as the current renewed petition were filed in the '199 national stage application as opposed to the '772 application filed under 35 U.S.C. 111. Further, based on the statements in the renewed petition it appears that there is the possibility that applicants may be unaware of the presence of the '772 application.

Therefore, any further decision on the petition to revive the international application is being held in abeyance pending resolution of status of the international application and its relationship to the '772 and '199 applications.

Should applicants desire the petition to revive be considered in the '199 national stage application, then applicants should either file a new petition to revive in the '199 application or, in the alternative, offer proof (e.g., a properly itemized postcard receipt) that the initial petition was filed in the '199 application.

Should applicants desire the petition to revive be considered in the '772 35 U.S.C. 111 application, then applicants should file a proper response to the 05 April 2010 decision (i.e., a proper claim for benefit under 35 U.S.C. 120) along with the requisite fees set forth in the 02 June 2010 Notice To File Missing Parts.

Finally, the Office acknowledges the possibility that applicant submitted a single set of papers intending for there to be a single national application, but that the papers were divided in view of the differing indications on the two transmittal letters. Should applicants contend that this is in fact what happened and that there should be only a single U.S. application which claims benefit to the present international application then applicants must submit a petition under 37 CFR 1.182 requesting that the '772 and '199 files be combined, the requisite petition fee of $400, and evidence to that effect (e.g., a properly itemized postcard receipt clearly showing that all of the papers filed on 08 February 2010, were submitted together as a single filing). Applicants should note that, should this in fact be applicants' position, in view of the conflicting instructions contained in the initially filed papers, the resulting single application will be considered to be a national filing under 35 U.S.C. 111 and not a national stage filing under 35 U.S.C. 371 (see. 37 CFR 1.495(g)). Therefore, any renewed petition to revive will again need to comply with the requirement for a proper benefit claim under 35 U.S.C. 120.

CONCLUSION

For the reasons above, the decision on the petition is hereby **HELD IN ABEYANCE** pending resolution of the issues discussed above.

If reconsideration on the merits of this petition is desired, a proper response must be filed within TWO (2) MONTHS from the mail date of this decision.

Extensions of time may be obtained under 37 CFR 1.136(a).

Any further correspondence with respect to this matter may be filed electronically via EFS-Web selecting the document description "Petition for review and processing by the PCT Legal Office" or by mail addressed to Mail Stop PCT, Commissioner for Patents, Office of PCT Legal Administration, P.O. Box 1450, Alexandria, Virginia 22313-1450, with the contents of the letter marked to the attention of the Office of PCT Legal Administration.

Richard R. Cole
Senior PCT Legal Examiner
Office of PCT Legal Administration

(571) 272-3281

UNITED STATES PATENT AND TRADEMARK OFFICE

Commissioner for Patents
United States Patent and Trademark Office
P.O. Box 1450
Alexandria, VA 22313-1450
www.uspto.gov

MAILED

FEB 22 2011

PCT LEGAL ADMINISTRATION

PHILIP E. RETTIG
HARNESS, DICKEY & PIERCE, P.L.C.
P.O. BOX 828
BLOOMFIELD HILLS MI 48303

In re Application of :
MAGNA POWERTRAIN USA, Inc. :
PCT No.: PCT/US2007/023520 :
Int. Filing Date: 08 November 2007 :
Priority Date: 30 November 2006 :
Docket No.: 6978-350/POA :
For: INPUT TORQUE LIMITING CLUTCH FOR POWER TRANSFER ASSEMBLY :

DECISION ON

PETITION

UNDER 37 CFR 1.181

This decision is in response to applicant's Petition filed with the United States Patent and Trademark Office on 15 May 2009 and the request for status filed on 12 January 2010.

BACKGROUND

On 08 November 2007, applicants filed international application no. PCT/US07/023520, claiming a priority date of 30 November 2006, including a Request, description, claims and 3 pages of drawings. The pages of drawings were numbered 1/3, 2/3 and 3/3. The figures were numbered 1, 3, 4 and 5.

On 08 February 2008, the Office mailed *inter alia*, Notification of the International Application Number and of the International Filing Date (Form PCT/RO/105).

On 20 March 2008, applicants filed "Submission of Replacement Drawings" accompanied by 4 sheets of substitute drawings. The figures were numbered 1-5.

On 04 April 2008, the Office mailed Notification Concerning Later Submitted Parts of an International Application (Form PCT/RO/126) indicating that the later submitted parts that were furnished by applicant to complete the application were filed more than two months from the date that one or more elements of this international application were received in the Receiving Office.

On 27 January 2009, applicants filed a request for rectification under PCT Rule 91.1 asking that the Office accept Figure 2 under PCT Rule 91.1.

On 15 May 2009, applicants filed a petition under 37 CFR 1.181 stating that the Office has not issued an invitation under PCT Rule 20.5(a) and that it should.

On 02 June 2009, the Office mailed Notification of Decision Concerning Request For Rectification (Form PCT/ISA/217) indicating that figure 2 was not in the originally filed application papers and concluding that the offered rectification did not fall within the scope

of PCT Rule 91.1 as the correction of an obvious error.

On 12 January 2010, applicant filed a request for status on the 15 May 2009 petition.

DISCUSSION

The 15 May 2009 petition is a Petition Under 37 CFR 1.181. Under 37 CFR 1.181(f), petitions under 37 CFR 1.181 should be "filed within two months of the mailing date of the action or notice from which relief is requested may be dismissed as untimely, except as otherwise provided." This two-month period is not extendable. The notice from which relief is requested is the Form PCT/RO/126, mailed 04 April 2008. This petition is untimely.

However, even if it had been timely, it is not clear that issuance of a Form PCT/RO/107, was required. Further, relief could not have been granted under PCT Rule 91.1 as the mistake was the omission of an entire sheet, specifically excluded under PCT Rule 91.1(g)(i).

Applicant claims that the Office was required to issue a Invitation under PCT Rule 20.5, namely Invitation Relating to Certain Parts of the International Application That Are Or Appear To Be Missing (Form PCT/RO/107). Under PCT Rule 20.5, the Office is required to issue an invitation when the Office finds that a part or drawing "is or appears to be missing". The invitation invites applicant at applicant's option to complete the application or to incorporate by reference under PCT Rule 20.6(a).

Here, applicant's Request form, transmittal letter and certificate under 37 CFR 1.10 all indicated 3 pages of drawings. Further, the pages of drawings were numbered consecutively 1/3, 2/3 and 3/3. It was not apparent on its face that anything was missing from the application.

CONCLUSION

For the reasons discussed above, applicant's petition under 37 CFR 1.181 is **DISMISSED** without prejudice.

This application is being returned to PCT Operations for continued processing.

/Erin P. Thomson/

Erin P. Thomson
Attorney Advisor
PCT Legal Administration

Telephone: 571-272-3292

cc: International Bureau

34, Chemin des Colombettes
1211 Geneva 20
Switzerland

UNITED STATES PATENT AND TRADEMARK OFFICE

Commissioner for Patents
United States Patent and Trademark Office
P.O. Box 1450
Alexandria, VA 22313-1450
www.uspto.gov

David R. Fairbairn
Kinney & Lange, P.A.
Kinney & Lange Bldg.
Minneapolis, MN 55415-1002

MAILED

APR 27 2011

PCT LEGAL ADMINISTRATION

In re Application of
OTIS ELEVATOR COMPANY
PCT No.: PCT/US08/12992
Int. Filing Date: 21 NOVEMBER 2008
Priority Date: NONE
Attorney Docket No.: U72-500061
For: OPERATION OF A THREE-PHASE REGENERATIVE DRIVE FROM MIXED DC AND SINGLE PHASE AC POWER SOURCES

DECISION ON PETITION
UNDER 37 CFR 1.181

This decision is in response to applicant's " communication filed 05 April 2011, which is being treated as a Petition under 37 CFR 1.181. Applicant requests that the copy of page 10 of the description filed with the present petition be accepted as a replacement for the original allegedly filed on 21 November 2008. No petition fee is required.

BACKGROUND

On 21 November 2008, applicant filed the above-captioned international application in which no priority was claimed.

On 11 December 2008, the United States Receiving Office mailed the following: the Notification of Concerning Prescribed Fees (Form PCT/RO/102); Notification of the International Application Number and of the International Filing Date (Form PCT/RO/105); and Notification Regarding Certain Corrections Made Ex Officio (Form PCT/RO/146).

On 05 April 2011, applicant filed the present "Petition under 37 CFR 1.181." The present petition is accompanied, *inter alia*, by: a copy of page 10 of the description allegedly filed with the international application, and a copy of an itemized postcard receipt which is date stamped "21 November 2008" by the USPTO. Applicant also includes page 4/5 of the Request with an "ex officio" change by the RO/US indicating 13 sheets of the description.

DISCUSSION

Applicant states in their present petition that page 10 of the description was received at the United States Patent and Trademark Office on 21 November 2008. Section 503 of the Manual of Patent Examining Procedure under the heading "RETURN POSTCARD" states, in part:

> "A postcard receipt which itemizes and properly identifies the papers which are being filed serves as prima facie evidence of receipt in the PTO of all the items listed thereon on the date stamped thereon by the PTO."

The evidence submitted by applicant includes a copy of a date stamped returned post card receipt bearing: a receipt date stamp of "IAPO4Rec'd PCT 21 Nov 2008," the international application number stamp of "PCT/US2008/012992," and the Docket No. "U72-500061" as used on the PCT Request (PCT/RO/101). The post card receipt indicates that the Request (5 pages); description (14 pages), claim (3 pages), abstract (1 page); and drawings (5 pages) were filed for the above-identified international application.

A review of the application file reveals that the international application includes 5 pages of Request, 13 pages of description, 3 pages of claims, 1 page of abstract; and 5 pages of drawings received on 21 November 2008. However, the returned post card receipt copy supplied with the petition evidences that the PCT application included 14 pages of description. Thus, the evidence suggests that page 10 of the description received on 21 November 2008 was lost after filing with the USPTO. As construed above, the statements in the petition and filed therewith together with the date stamped postcard receipt copy are consistent and convincing that the United States Receiving Office (RO/US) received the application papers including page 10 of the description for this application on 21 November 2008. In view of the above, the Office will accept the copy of page 10 of the description of the international application submitted on 05 April 2011, as a replacement for the missing original, as requested, with an international filing date of 21 November 2008.

CONCLUSION

For the reasons above, the petition is GRANTED.

The copy of the page 10 of the description filed 05 April 2011 is ACCEPTED as having been originally deposited on 21 November 2008.

The Notification Regarding Certain Corrections Made Ex Officio (Form PCT/RO/146) mailed 11 December 2008 is hereby **VACATED**.

A copy of this decision together with the enclosed missing page 10 of the description will be forwarded to the International Bureau. In addition, page 10 of the description will be added to the description of international application PCT/US08/12992 in the file held by the RO/US.

Wanda Banks
Paralegal Specialist
Office of PCT Legal Administration
Telephone: (571) 272-3277
Facsimile: (571) 273-0459

Boris Milef
Legal Examiner
Office of PCT Legal Administration

Enclosure: Page 10 of the description

62T. For $k_b^* = 0.5$, the current reference will be split equally between single phase AC source 12 and DC source 14. For $k_b^* = 1$, DC power source 14 and transistors 60T and 62T will control voltage V_{dc} on DC bus 24. Different values for load sharing factor $k_b^* = 1$ can be selected during motoring and during regeneration, and additionally it can be varied depending on the level of charge in the battery.

AC current control 82 generates control signals used by PWM-AC pulse generator 86 to produce gating pulses to transistors 60R, 60S, 62R, and 62S. The control signals are a function of I_q^{**}, I_q^f, I_d^f, and I_d^*. As shown in FIG. 3, $I_q^{**} = (1 - k_b^*)\, I_q^*$.

DC current control generates control signals used by PWM-DC pulse generator to produce gating pulses to transistors 60T and 62T. The control signals are a function of $k_b^* I_b^*$

The average value of additional power from the DC source, P_{b_dc}, is:

$$P_{b\_dc} = V_b I_b \tag{4}$$

The loading of the leg of converter 22 operating from DC source 14 (i.e., the circuit formed by transistors 60T and 62T) is a complex function of the ratio of the DC source voltage to the DC bus voltage, IGBT module design, free wheeling current rating, IGBT device rating, current direction, etc. The total converter power, Pc, is sum of power from AC source 12 and DC source 14:

$$P_c = P_{b\_dc} + P_{1ph} = I_b V_b + I V_{ph} \tag{5}$$

To reduce voltage ripple on DC bus 24, the instantaneous power from single phase AC source 12 (P_{1ph}) and DC source 14 (P_{b_dc}), should be constant:

$$P_{1ph} + P_{b\_ac} = V_{ph} I(1 - \cos(2\omega t)) + P_{b\_ac} = V_{ph} I \tag{6}$$

Where V_{ph} and I are RMS values of phase voltage and current. From Equation (6) it follows the AC power component from DC source should be:

$$P_{b\,ac} V_{ph} I \cos(2\omega t)) = V_b I_{b\_ac} \tag{7}$$

Or the AC component of current from the DC source should be:

$$I_{b\_ac} = \frac{V_{ph}}{V_b} I \cos(2\omega t) \tag{8}$$

This AC component can be provided by appropriate control of DC source 14.

The addition of DC power source 14 together with power sharing between single phase AC power source 12 and DC power source 14 produces reduced voltage ripple on DC

UNITED STATES PATENT AND TRADEMARK OFFICE

Commissioner for Patents
United States Patent and Trademark Office
P.O. Box 1450
Alexandria, VA 22313-1450
www.uspto.gov

MAILED

DEC 08 2010

PCT LEGAL ADMINISTRATION

Samir Srivastava
1035 Aster Ave., Apt # 1255
Sunnyvale, CA 94086

In re Application of :
SAMIR SRIVASTAVA :
PCT No.: PCT/US08/13284 : DECISION ON
Int. Filing Date: 01 December 2008 : REQUEST FOR REFUND
Priority Date: 29 November 2007 : UNDER 37 CFR 1.446
Agent's File Reference: None :
For: ANTI-MALPRACTICE IN SEU :

This decision is in response to applicant's communication filed 02 November 2010. Applicant's communication has been treated as a request under 37 CFR 1.446 for the refund of the search fee in the amount of $1,800. The request is **DISMISSED.**

BACKGROUND

On 01 December 2008, applicant filed international application PCT/US08/13284, which claimed priority to a U.S. application filed 29 November 2007.

On 16 March 2009, the United States Receiving Office (RO/US) mailed a "NOTIFICATION OF RECEIPT OF SEARCH COPY" (Form PCT/ISA/202) informing applicant that the search copy for the present international application was transmitted to the International Searching Authority (ISA).

On 27 May 2009, the United States International Searching Authority (ISA/US) mailed a "DECLARATION OF NON-ESTABLISHMENT OF INTERNATIONAL SEARCH REPORT" (Form PCT/ISA/203) which informed applicant that a meaningful search could not be carried out.

On 02 November 2010, applicant filed the present communication requesting a refund of the search fees in the amount of $1,800.

DISCUSSION

37 CFR 1.446 sets the conditions for obtaining a refund of international fees. With regard to the search fee, 37 CFR 1.446(d) states:

> *"The international and search fees will be refunded if no international filing date is accorded or if the application is withdrawn before transmittal of the record copy to the*

International Bureau (PCT Rules 15.6 and 16.2). The search fee will be refunded if the application is withdrawn before transmittal of the search copy to the International Searching Authority. The transmittal fee will not be refunded."

A review of the application file reveals that the present international application has not been withdrawn and that the search copy was sent to the ISA/US on 16 March 2009. Therefore, applicant has not satisfied the conditions set forth in 37 CFR 1.446(d) for a refund of the search fee. Accordingly, applicant's request for a refund in the amount of $1,800 cannot be granted.

CONCLUSION

For the above reasons, applicant's request under 37 CFR 1.446 to refund the search fee in the amount of $1,800 is **DISMISSED.**

Any further correspondence with respect to this matter should be directed to the Assistant Commissioner for Patents, Mail Stop PCT, P.O. Box 1451, Alexandria, VA 22313-1450.

Boris Milef
PCT Legal Examiner
Office of PCT Legal Administration

Jeremy Fleming
Paralegal Specialist
Office of PCT Legal Administration

JSF/BM:jf

(571) 272-3284

UNITED STATES PATENT AND TRADEMARK OFFICE

Commissioner for Patents
United States Patent and Trademark Office
P.O. Box 1450
Alexandria, VA 22313-1450
www.uspto.gov

MAILED
08 DEC 2010
PCT LEGAL ADMINISTRATION

Samir Srivastava
1035 Aster Ave., Apt # 1255
Sunnyvale, CA 94086

In re Application of :
SAMIR SRIVASTAVA :
PCT No.: PCT/US08/13285 : DECISION ON
Int. Filing Date: 01 December 2008 : REQUEST FOR REFUND
Priority Date: 30 November 2007 : UNDER 37 CFR 1.446
Agent's File Reference: None :
For: ENCRYPTION FOR SOFT EARNING UNIT :

This decision is in response to applicant's communication filed 02 November 2010. Applicant's communication has been treated as a request under 37 CFR 1.446 for the refund of the search fee in the amount of $1,800. The request is **DISMISSED.**

BACKGROUND

On 01 December 2008, applicant filed international application PCT/US08/13285, which claimed priority to a U.S. application filed 30 November 2007.

On 10 March 2009, the United States Receiving Office (RO/US) mailed a "NOTIFICATION OF RECEIPT OF SEARCH COPY" (Form PCT/ISA/202) informing applicant that the search copy for the present international application was transmitted to the International Searching Authority (ISA).

On 03 June 2009, the United States International Searching Authority (ISA/US) mailed, inter alia, a "DECLARATION OF NON-ESTABLISHMENT OF INTERNATIONAL SEARCH REPORT" (Form PCT/ISA/203) which informed applicant that a meaningful search could not be carried out.

On 02 November 2010, applicant filed the present communication requesting a refund of the search fees in the amount of $1,800.

DISCUSSION

37 CFR 1.446 sets forth the conditions for obtaining a refund of international fees. With regard to the search fee, 37 CFR 1.446(d) states:

"The international and search fees will be refunded if no international filing date is accorded or if the application is withdrawn before transmittal of the record copy to the

International Bureau (PCT Rules 15.6 and 16.2). The search fee will be refunded if the application is withdrawn before transmittal of the search copy to the International Searching Authority. The transmittal fee will not be refunded."

A review of the application file reveals that the present international application has not been withdrawn and that the search copy was sent to the ISA/US on 10 March 2009. Therefore, applicant has not satisfied the conditions set forth in 37 CFR 1.446(d) for a refund of the search fee. Accordingly, applicant's request for a refund in the amount of $1,800 cannot be granted.

CONCLUSION

For the above reasons, applicant's request under 37 CFR 1.446 to refund the search fee in the amount of $1,800 is **DISMISSED.**

Any further correspondence with respect to this matter should be directed to the Assistant Commissioner for Patents, Mail Stop PCT, P.O. Box 1451, Alexandria, VA 22313-1450.

Boris Milef
PCT Legal Examiner
Office of PCT Legal Administration

JSF/BM:jf

Jeremy Fleming
Paralegal Specialist
Office of PCT Legal Administration

(571) 272-3284

UNITED STATES PATENT AND TRADEMARK OFFICE

Commissioner for Patents
United States Patent and Trademark Office
P.O. Box 1450
Alexandria, VA 22313-1450
www.uspto.gov

MAILED

DEC 08 2010

PCT LEGAL ADMINISTRATION

Samir Srivastava
1035 Aster Ave., Apt # 1255
Sunnyvale, CA 94086

In re Application of :
SAMIR SRIVASTAVA :
PCT No.: PCT/US08/66617 : DECISION ON
Int. Filing Date: 12 June 2008 : REQUEST FOR REFUND
Priority Date: 11 June 2007 : UNDER 37 CFR 1.446
Agent's File Reference: None :
For: ADAPTER FOR SOFT EARNING UNITS :

This decision is in response to applicant's communication filed 02 November 2010. Applicant's communication has been treated as a request under 37 CFR 1.446 for the refund of the search fee in the amount of $1,800. The petition is **DISMISSED.**

BACKGROUND

On 12 June 2008, applicant filed international application PCT/US08/66617, which claimed priority to a U.S. application filed 11 June 2007.

On 12 August 2008, the United States Receiving Office (RO/US) mailed a "NOTIFICATION OF RECEIPT OF SEARCH COPY" (Form PCT/ISA/202) informing applicant that the search copy for the present international application was transmitted to the International Searching Authority (ISA).

On 06 October 2008, the United States International Searching Authority (ISA/US) mailed, inter alia, a "DECLARATION OF NON-ESTABLISHMENT OF INTERNATIONAL SEARCH REPORT" (Form PCT/ISA/203) which informed applicant that a meaningful search could not be carried out.

On 02 November 2010, applicant filed the present communication requesting a refund of the search fees in the amount of $1,800.

DISCUSSION

37 CFR 1.446 sets forth the conditions for obtaining a refund of international fees. With regard to the search fee, 37 CFR 1.446(d) states:

"The international and search fees will be refunded if no international filing date is

accorded or if the application is withdrawn before transmittal of the record copy to the International Bureau (PCT Rules 15.6 and 16.2). The search fee will be refunded if the application is withdrawn before transmittal of the search copy to the International Searching Authority. The transmittal fee will not be refunded."

A review of the application file reveals that the present international application has not been withdrawn and that the search copy was sent to the ISA/US on 12 August 2008. Therefore, applicant has not satisfied the conditions set forth in 37 CFR 1.446(d) or for a refund of the search fee. Accordingly, applicant's request for a refund in the amount of $1,800 cannot be granted.

CONCLUSION

For the above reasons, applicant's request under 37 CFR 1.446 to refund the search fee in the amount of $1,800 is **DISMISSED.**

Any further correspondence with respect to this matter should be directed to the Assistant Commissioner for Patents, Mail Stop PCT, P.O. Box 1451, Alexandria, VA 22313-1450.

Boris Milef
PCT Legal Examiner
Office of PCT Legal Administration

JSF/BM:jf

Jeremy Fleming
Paralegal Specialist
Office of PCT Legal Administration

(571) 272-3284

UNITED STATES PATENT AND TRADEMARK OFFICE

Commissioner for Patents
United States Patent and Trademark Office
P.O. Box 1450
Alexandria, VA 22313-1450
www.uspto.gov

MAILED

DEC 08 2010

PCT LEGAL ADMINISTRATION

Samir Srivastava
1035 Aster Ave., Apt # 1255
Sunnyvale, CA 94086

In re Application of	:	
SAMIR SRIVASTAVA	:	
PCT No.: PCT/US08/69273	:	DECISION ON
Int. Filing Date: 04 July 2008	:	REQUEST FOR REFUND
Priority Date: 04 July 2007	:	UNDER 37 CFR 1.446
Agent's File Reference: None	:	
For: CURRENCY CODE FOR SOFT EARNING UNIT	:	

This decision is in response to applicant's communication filed 02 November 2010. Applicant's communication has been treated as a request under 37 CFR 1.446 for the refund of the search fee in the amount of $1,800. The request is **DISMISSED.**

BACKGROUND

On 04 July 2008, applicant filed international application PCT/US08/69273, which claimed priority to a U.S. application filed 04 July 2007.

On 03 November 2008, the United States Receiving Office (RO/US) mailed a "NOTIFICATION OF RECEIPT OF SEARCH COPY" (Form PCT/ISA/202) informing applicant that the search copy for the present international application was transmitted to the International Searching Authority (ISA).

On 12 December 2008, the United States International Searching Authority (ISA/US) mailed, inter alia, a "DECLARATION OF NON-ESTABLISHMENT OF INTERNATIONAL SEARCH REPORT" (Form PCT/ISA/203) which informed applicant that a meaningful search could not be carried out.

On 02 November 2010, applicant filed the present communication requesting a refund of the search fees in the amount of $1,800.

DISCUSSION

37 CFR 1.446 sets forth the conditions for obtaining a refund of international fees. With regard to the search fee, 37 CFR 1.446(d) states:

"The international and search fees will be refunded if no international filing date is accorded or if the application is withdrawn before transmittal of the record copy to the International Bureau (PCT Rules 15.6 and 16.2). The search fee will be refunded if the application is withdrawn before transmittal of the search copy to the International Searching Authority. The transmittal fee will not be refunded."

A review of the application file reveals that the present international application has not been withdrawn and that the search copy was sent to the ISA/US on 03 November 2008. Therefore, applicant has not satisfied the conditions set forth in 37 CFR 1.446(d) for a refund of the search fee. Accordingly, applicant's request for a refund in the amount of $1,800 cannot be granted.

CONCLUSION

For the above reasons, applicant's request under 37 CFR 1.446 to refund the search fee in the amount of $1,800 is **DISMISSED.**

Any further correspondence with respect to this matter should be directed to the Assistant Commissioner for Patents, Mail Stop PCT, P.O. Box 1451, Alexandria, VA 22313-1450.

Boris Milef
PCT Legal Examiner
Office of PCT Legal Administration

JSF/BM:jf

Jeremy Fleming
Paralegal Specialist
Office of PCT Legal Administration

(571) 272-3284

UNITED STATES PATENT AND TRADEMARK OFFICE

Commissioner for Patents
United States Patent and Trademark Office
P.O. Box 1450
Alexandria, VA 22313-1450
www.uspto.gov

KATHRYN DOYLE
DRINKER BIDDLE & REATH LLP
ONE LOGAN SQUARE, 18TH
AND CHERRY STREETS
PHILADELPHIA PA PENNSYLVANIA 19103

MAILED

DEC 30 2010

OFFICE OF PETITIONS

Application No. PCT/US08/79205
Filed: October 8, 2008
Attorney Docket No. 46483-0116-00-WO
(429580)

DECISION ON PETITION

This is a decision on the petition for expungement of information, filed June 9, 2010, which is being treated as a petition under 37 CFR 1.182 to invalidate assignments previously recorded against the above-identified application.

The petition is **dismissed**. This is not a final agency action.

Petitioner indicates an assignment recorded on May 4, 2010 was erroneously filed for the above identified application and requests this assignment record be expunged from the file.

As discussed in section 323.01(d) of the Manual of Patent Examining Procedure (MPEP), petitions to correct, modify or "expunge" assignment records are granted only if the petitioner can prove that:

(A) the normal corrective procedures outlined in MPEP § 323.01(a) through §323.01(c) will not provide the petitioner with adequate relief; and
(B) the integrity of the assignment records will not be affected by granting the petition.

Petitioner has not proven either item A or B.

Moreover, petitioner seeks an extraordinary remedy, properly addressed under 37 CFR 1.182. The USPTO will not normally resort to an extraordinary remedy under 37 CFR 1.182 if the rules of practice and the procedures before the USPTO already provide an avenue for the requested relief. See Cantello v. Rasmussen, 220 USPQ 664, (Comm'r Pats. 1982).

As background, the USPTO simply acts in a ministerial capacity in recording documents that have been submitted for recordation. See 35 USC 261 and 37 CFR 3.11. However, the recording of a document pursuant to 37 CFR 3.11 is **not** a determination by the USPTO of the validity of the document *per se* or the effect that document has on the title to a patent or

application. See 37 CFR 3.54. Moreover, it is USPTO policy to maintain a complete history of claimed interests in a given property, and, as such, a recorded assignment document will be retained, even if it is subsequently found to be invalid. In re Raney, 24 USPQ2d 1713 (Comm'r Pat. 1992).

As set forth in MPEP 323, an error in a recorded assignment is not corrected by invalidating the previous document, but by simply submitting a "corrective document". The "corrective document" must include 1) a copy of the original assignment document with the corrections made therein. The corrections must be initialed and dated by the party conveying the interest; and 2) a new Recordation Form Cover Sheet (form PTO-1595). The new recordation form cover sheet must identify the submission as a "corrective document" submission and indicate the reel and frame number where the incorrectly recorded assignment document appears. The person signing the new recordation form cover sheet must state that the information provided on the new cover sheet is true and correct and that any copy submitted is a true copy of the original document. The original cover sheet should be submitted with the corrective document. The corrective document will be recorded and given a new reel and frame number and recording date. The recording fee set forth in 37 CFR 1.21(h) is required for each patent application and patent against which the corrective document is being recorded. See MPEP § 302.06. Petitioner should note that the "assignment documents" and "corrective documents" are not limited to assignments, but include any documents affecting title to a patent or application. See MPEP § 313.

Therefore, the rules of practice and the procedures before the USPTO provide an avenue for the requested relief without relying upon extraordinary measures. That is, the chain of title can be clarified in the assignment records through the recording of a corrective document. As a request for the Office to invalidate an assignment is both extraordinary and contrary to USPTO policy, this petition must be dismissed.

In addition, a petition to expunge assignment documents is properly addressed under 37 CFR 1.182 and a fee of $400.00 is required. The petition includes authorization for a petition fee of $130. An additional $270 fee has been charged to Deposit Account, as authorized.

Telephone inquiries concerning this communication should be directed to Carl Friedman at (571)272-6842.

Christopher Bottorff
Supervisory Petitions Examiner
Office of Petitions

cc: GlaxoSmithKline
Corporate Intellectual Property – UW 2220
P.O. Box 1539
King of Prussia, PA 19406-0939

UNITED STATES PATENT AND TRADEMARK OFFICE

Commissioner for Patents
United States Patent and Trademark Office
P.O. Box 1450
Alexandria, VA 22313-1450
www.uspto.gov

Samir Srivastava
1035 Aster Ave., Apt. # 1255
Sunnyvale, CA 94086

MAILED

DEC 08 2010

PCT LEGAL ADMINISTRATION

In re Application of :
SAMIR SRIVASTAVA :
PCT No.: PCT/US08/82929 :
Int. Filing Date: 09 November 2008 :
Priority Date: 09 November 2007 :
Agent's File Reference: None :
For: PAYMENT MODE FOR SOFT EARNING UNIT :

DECISION ON
REQUEST FOR REFUND
UNDER 37 CFR 1.446

This decision is in response to applicant's communication filed 02 November 2010. Applicant's communication has been treated as a request under 37 CFR 1.446 for the refund of the search fee in the amount of $1,800. The request is **DISMISSED.**

BACKGROUND

On 09 November 2008, applicant filed international application PCT/US08/82929, which claimed priority to a U.S. application filed 09 November 2007.

On 24 February 2009, the United States Receiving Office (RO/US) mailed a "NOTIFICATION OF RECEIPT OF SEARCH COPY" (Form PCT/ISA/202) informing applicant that the search copy for the present international application was transmitted to the International Searching Authority (ISA).

On 18 May 2009, the United States International Searching Authority (ISA/US) mailed, inter alia, a "DECLARATION OF NON-ESTABLISHMENT OF INTERNATIONAL SEARCH REPORT" (Form PCT/ISA/203) which informed applicant that a meaningful search could not be carried out.

On 02 November 2010, applicant filed the present communication requesting a refund of the search fees in the amount of $1,800.

DISCUSSION

37 CFR 1.446 sets the conditions for obtaining a refund of the international fees. With regard to the search fee, 37 CFR 1.446(d) states:

"The international and search fees will be refunded if no international filing date is accorded or if the application is withdrawn before transmittal of the record copy to the International Bureau (PCT Rules 15.6 and 16.2). The search fee will be refunded if the application is withdrawn before transmittal of the search copy to the International Searching Authority. The transmittal fee will not be refunded"

A review of the application file reveals that the present international application has not been withdrawn and that the search copy was sent to the ISA/US on 24 February 2008. Therefore, applicant has not satisfied the conditions set forth in 37 CFR 1.446(d) for a refund of the search fee. Accordingly, applicant's request for a refund in the amount of $1,800 cannot be granted.

CONCLUSION

For the above reasons, applicant's request under 37 CFR 1.446 to refund the search fee in the amount of $1,800 is **DISMISSED.**

Any further correspondence with respect to this matter should be directed to the Assistant Commissioner for Patents, Mail Stop PCT, P.O. Box 1451, Alexandria, VA 22313-1450.

Boris Milef
PCT Legal Examiner
Office of PCT Legal Administration

Jeremy Fleming
Paralegal Specialist
Office of PCT Legal Administration

JSF/BM:jf

(571) 272-3284

28 SEP 2010

United States Patent and Trademark Office

Commissioner for Patents
United States Patent and Trademark Office
P.O. Box 1450
Alexandria, VA 22313-1450
www.uspto.gov

JANICE KUGLER DEYOUNG
FISH & RICHARDSON
P.O. BOX 1022
MINNEAPOLIS MN 55440-1022

In re Application of	:	
The Brigham And Women's Hospital, Inc.	:	
PCT No.: PCT/US2008/083016	:	
Int. Filing Date: 10 November 2008	:	DECISION
Priority Date: 20 November 2007	:	
Attorney's Docket No.: 053110059WO1	:	
For: Modulation Of The Immune Response	:	

This is in response to applicants' "Request To Correct International Filing Date" filed on 17 May 2010.

BACKGROUND

Applicant filed this international application with the United States receiving Office via EFS-Web on 10 November 2008.

On 26 November 2008, a Notification Of The International Application Number And Of The International Filing Date (Form PCT/RO/105) indicating an international filing date of 10 November 2008 was mailed to applicants.

On 27 November 2008, the International Bureau mailed a Notification Concerning Submission or Transmittal of Priority Document (Form PCT/IB/304) showing an international filing date of "11 October 2008."

DISCUSSION

Petitioner requests correction of the international filing date, asserting that the "international application was filed on November 10, 2008." Review of the application file reveals that the international application was filed on 10 November 2008, and that an international filing date of 10 November 2008 was accorded, as shown on Form PCT/RO/105. However, review of the record also reveals that the PCT Request (Form PCT/RO/101) was stamped with an International Filing Date of "11 OCTOBER 2008 (11.10.08)." A corrected first sheet of the Request, showing the proper international filing date, is attached hereto.

Applicants further request issuance of a Form PCT/IB/304 showing the corrected international filing date, but said form is issued by the International Bureau, not the RO/US. A copy of this Decision is being forwarded to the International Bureau.

DECISION

Applicants' request is **GRANTED**, to the extent described *supra*. The international filing date remains **10 November 2008**.

/George Dombroske/
George Dombroske
PCT Legal Examiner
Office of PCT Legal Administration
Tel: (571) 272-3283

enc: PCT Request (Form PCT/RO/101), first sheet

cc: International Bureau of WIPO

UNITED STATES PATENT AND TRADEMARK OFFICE

Commissioner for Patents
United States Patent and Trademark Office
P.O. Box 1450
Alexandria, VA 22313-1450
www.uspto.gov

MAILED

DEC 08 2010

PCT LEGAL ADMINISTRATION

Samir Srivastava
1035 Aster Ave., Apt # 1255
Sunnyvale, CA 94086

In re Application of :
SAMIR SRIVASTAVA :
PCT No.: PCT/US08/83704 : DECISION ON
Int. Filing Date: 14 November 2008 : REQUEST FOR REFUND
Priority Date: 14 November 2007 : UNDER 37 CFR 1.446
Agent's File Reference: None :
For: TRANSACTIONS IN SOFT EARNING UNIT :

This decision is in response to applicant's communication filed 02 November 2010. Applicant's communication has been treated as a request under 37 CFR 1.446 for the refund of the search fee in the amount of $1,800. The request is **DISMISSED.**

BACKGROUND

On 14 November 2008, applicant filed international application PCT/US08/83704, which claimed priority to a U.S. application filed 14 November 2007.

On 04 March 2009, the United States Receiving Office (RO/US) mailed a "NOTIFICATION OF RECEIPT OF SEARCH COPY" (Form PCT/ISA/202) informing applicant that the search copy for the present international application was transmitted to the International Searching Authority (ISA).

On 07 April 2009, the United States International Searching Authority (ISA/US) mailed, inter alia, a "DECLARATION OF NON-ESTABLISHMENT OF INTERNATIONAL SEARCH REPORT" (Form PCT/ISA/203) which informed applicant that a meaningful search could not be carried out.

On 02 November 2010, applicant filed the present communication requesting a refund of the search fees in the amount of $1,800.

DISCUSSION

37 CFR 1.446 sets forth the conditions for obtaining a refund of international fees. With regard to the search fee, 37 CFR 1.446(d) states:

"The international and search fees will be refunded if no international filing date is accorded or if the application is withdrawn before transmittal of the record copy to the International Bureau (PCT Rules 15.6 and 16.2). The search fee will be refunded if the application is withdrawn before transmittal of the search copy to the International Searching Authority. The transmittal fee will not be refunded."

A review of the application file reveals that the present international application has not been withdrawn and that the search copy was sent to the ISA/US on 04 March 2009. Therefore, applicant has not satisfied the conditions set forth in 37 CFR 1.446(d) for a refund of the search fee. Accordingly, applicant's request for a refund in the amount of $1,800 cannot be granted.

CONCLUSION

For the above reasons, applicant's request under 37 CFR 1.446 to refund the search fee in the amount of $1,800 is **DISMISSED.**

Any further correspondence with respect to this matter should be directed to the Assistant Commissioner for Patents, Mail Stop PCT, P.O. Box 1451, Alexandria, VA 22313-1450.

Boris Milef
PCT Legal Examiner
Office of PCT Legal Administration

Jeremy Fleming
Paralegal Specialist
Office of PCT Legal Administration

JSF/BM:jf

(571) 272-3284

UNITED STATES PATENT AND TRADEMARK OFFICE

Commissioner for Patents
United States Patent and Trademark Office
P.O. Box 1450
Alexandria, VA 22313-1450
www.uspto.gov

MAILED

JUL 20 2011

PCT LEGAL ADMINISTRATION

Auzville Jackson, Jr.
1500 Forest Ave., Ste. 212
Richmond, VA 23229

In re Application of :
STANISLAW MAJEWSKI, et al. :
PCT No.: PCT/US09/03141 : DECISION UNDER
Int. Filing Date: 21 May 2009 : 37 CFR 1.181
Priority Date: 23 January 2009 :
Agent's File Reference: 1983 PCT (JSA) :
For: DEDICATED MOBILE HIGH RESOLUTION :
PROSTATE PET IMAGER WITH AN INSERTABLE
TRANSRECTAL PROBE

This is in response to applicants' 06 July 2011 communication, which is being treated as a petition under 37 CFR 1.181 requesting that the copies of sheets nos. 21 and 27 of the description be entered in lieu of the originals purportedly filed on 21 May 2009 with the original application papers. No petition fee is due. The petition is **DISMISSED** as follows:

BACKGROUND

On 21 May 2009, applicants filed the present international application. The PCT Request in Box No. IX indicates that the description consists of 27 sheets. However, the United States Receiving Office (RO/US) made an ex-officio change to the Request to indicate that 25 sheets of the description were actually received.

On 06 July 2011, the present petition was filed requesting that sheets nos. 21 and 27 of the description be entered in lieu of the originals purportedly filed on 21 May 2009 with the original application papers.

DISCUSSION

MPEP 503 states in part that:

A postcard receipt which itemizes and properly identifies the items which are being filed serves as prima facie evidence of receipt in the USPTO of all the items listed thereon on the date stamped thereon by the USPTO.

A review of the application file reveals that applicants have not submitted any evidence to corroborate counsel's assertion that sheets nos. 21 and 27 of the description were present with the description as originally filed. Therefore, there is no basis for granting applicants' petition at this time.

CONCLUSION

For the above reasons, the request to treat sheets nos. 21 and 27 of the description as having been present with the original application papers is **DISMISSED without prejudice**.

Applicants are hereby accorded TWO (2) MONTHS from the mailing date of this decision to file a response. The reconsideration request should include a cover letter entitled "Renewed Petition Under 37 CFR 1.181".

Any further correspondence with respect to this matter should be addressed to the Assistant Commissioner for Patents, Mail Stop PCT, Alexandria, VA 22313-1450, with the contents of the letter directed to the attention of the Office of PCT Legal Administration.

Bryan Lin
PCT Legal Examiner
Office of PCT Legal Administration

Jeremy Fleming
Paralegal Specialist
Office of PCT Legal Administration

JSF/BL:jf

(571)272-3284

- 1 OCT 2010

UNITED STATES PATENT AND TRADEMARK OFFICE

Commissioner for Patents
United States Patent and Trademark Office
P.O. Box 1450
Alexandria, VA 22313-1450
www.uspto.gov

PETER V.D. WILDE
301 EAST LANDING
WILLIAMSBURG VA 23185

In re Application of	:	
OCLARO (North America), Inc.	:	
PCT No.: PCT/US2009/006210	:	DECISION ON
Int. Filing Date: 22 April 2010	:	
Priority Date: 21 November 2008	:	PETITION
Docket No.: OCL1511	:	
For: WAVELENGTH DIVISION MULTIPLEXED SYSTEMS WITH OPTICAL PERFORMANCE MONITORS	:	UNDER 37 CFR 1.181

This decision is in response to applicant's renewed Petition Under 37 CFR 1.181 filed with the United States Patent and Trademark Office on 06 August 2010.

BACKGROUND

On 19 November 2009, applicant filed a Request (Form PCT/RO/101), accompanied by a transmittal letter, a fee calculation sheet and fees.

On 11 December 2009, the Office mailed Invitation to Correct the Purported International Application (Form PCT/RO/103) indicating that the application lacked a part which on its face appeared to be a description or claims. It further indicated that except for elements considered to have been contained in the international application under Rule 20.6(b), the international filing date will be the date on which the corrections are received, if that date falls within the time limit indicated above. If the corrections are received beyond the time limit, the application will not be treated as an international application.

On 24 February 2010, the Office mailed Notification that the Purported International Application Is Not and Will Not Be Treated As an International Application (Form PCT/RO/104) indicating that applicants failed to respond to the Invitation issued 11 December 2009.

On 22 April 2010, applicants filed a description, claims and drawings and a petition under MPEP 711.03(c) to establish nonreceipt of the Invitation to Correct the Purported International Application (Form PCT/RO/103). The petition has been treated as a petition to vacate the Forms PCT/RO/103 and PCT/RO/104.

On 14 May 2010, the Office mailed Decision On Petition, granting applicants' petition to vacation the Forms PCT/RO/103 and PCT/RO/104 for non-receipt of the papers.

On 21 May 2010, the Office mailed, *inter alia*, Notification of the International Application Number and of the International Filing Date (Form PCT/RO/105), indicating that the application had an international filing date of 22 April 2010.

On 06 August 2010, applicants filed this renewed petition under 37 CFR 1.181.

DISCUSSION

Applicants argue that the international application should be accorded 19 November 2009 as its international filing date. Applicant argues that Invitation to Correct the Purported International Application (Form PCT/RO/103) was incorrectly filled out by the authorized officer and that applicant was unaware that he could incorporate by reference the missing part. The language of the form states "Where Item 6 and/or 7 apply, the applicant is hereby invited, within the time limit indicated above, *at the applicant's option*:" (emphasis added) and then the check boxes are next to the options. It was applicant's choice as to which option to pursue. Further, applicant was advised below "Except where a missing element is considered to have been contained in the international application under Rule 20.6(b), the international filing date will be the date on which the corrections are received," with Rule 20.6 referring to incorporation by reference.

In the alternative, applicant requests that the Office restore the right of priority to 21 November 2008. That date is not within the two months prior to the international filing date of this application, 22 April 2010. PCT Rule 26*bis*.3. The Office cannot restore the right of priority.

Applicant's use of *Delgar* is not on point. The Office vacated the notices which applicant claims to have not received. Applicant was allowed to establish an international filing date. However, the deadlines in the treaty are not necessarily based on notice from the Office, but rather are marked out in time from your priority date and are based on actual receipt. The Office cannot waive the treaty. PCT Rule 20.3(b)(i) directs the Receiving Office to accord this application an international filing date corresponding to the date of receipt of the required correction under Article 11(2).

To receive 19 November 2009 as the international filing date, applicant must establish that the Office was in receipt of all required elements under Article 11(1) on that day.

CONCLUSION

For the reasons discussed above, applicant's petition under 37 CFR 1.181 is **DISMISSED** without prejudice.

Any further correspondence with respect to this matter may be filed electronically via EFS-Web selecting the document description "Petition for review and processing by the PCT Legal Office" or by mail addressed to Mail Stop PCT, Commissioner for Patents, Office of PCT Legal Administration, P.O. Box 1450, Alexandria, Virginia 22313-1450, with the contents of the letter marked to the attention of the Office of PCT Legal Administration.

/Erin P. Thomson

Erin P. Thomson
Attorney Advisor
PCT Legal Administration

Telephone: 571-272-3292

16 AUG 2010

UNITED STATES PATENT AND TRADEMARK OFFICE

Commissioner for Patents
United States Patent and Trademark Office
P.O. Box 1450
Alexandria, VA 22313-1450
www.uspto.gov

JEAN B. FORDIS
FINNEGAN, HENDERSON, FARABOW,
GARRETT & DUNNER LLP
901 NEW YORK AVENUE, N.W.
WASHINGTON, D.C. 20001-4413

In re Application of	:	
FIVE PRIME THERAPEUTICS, INC.	:	DECISION
PCT No.: PCT/US2009/006299	:	
Int. Filing Date: 25 November 2009	:	
Priority Date: 26 November 2008	:	
Attorney's Docket No.: 8940-74-304	:	
For: CSF1R EXTRACELLULAR DOMAIN FUSION MOLECULES AND TREATMENTS USING SAME	:	

This decision is in response to applicant's "REQUEST FOR CORRECTION OF THE INTERNATIONAL FILING DATE", which has properly been treated as a petition under 37 CFR 1.10(c), filed 12 July 2010.

BACKGROUND

On 08 December 2009, the United States Receiving Office (RO/US) mailed a NOTIFICATION OF THE INTERNATIONAL APPLICATION NUMBER AND OF THE INTERNATIONAL FILING DATE (Form PCT/RO/105) indicating an international filing date of 27 November 2009.

On 12 July 2010, applicant submitted the instant petition under 37 CFR 1.10(c). The petition was accompanied by, *inter alia*, a copy of the Customer Copy of the "Express Mail Post Office to Addressee" mailing label #EM074695720US. The "Date Accepted" on the mailing label is "11-25" (the year is not indicated in the Date Accepted box).

DISCUSSION

Although Form PCT/RO/105 indicated the international filing date of the above-identified application as 27 November 2009, the evidence of record is sufficient to establish with reasonable certainty that the international application papers were deposited with the United States Postal Service as an "Express Mail Post Office to Addressee" mailing on 25 November

2009. Specifically, the "Express Mail" label number ("EM074695720US") appears on the transmittal letter, which also refers to, *inter alia*, an international application and lists the above-identified attorney docket number and title. The copy of the Customer Copy of this "Express Mail" label shows a "Date Accepted" of "11-25". Although the year is not indicated in the Date Accepted box, the USPS date stamp clearly indicates the year as 2009.

CONCLUSION

For the reasons set forth above, applicant's petition under 37 CFR 1.10(c) requesting that the application papers be accorded an international filing date of 25 November 2009 is **GRANTED**.

The NOTIFICATION OF THE INTERNATIONAL APPLICATION NUMBER AND OF THE INTERNATIONAL FILING DATE (Form PCT/RO/105) mailed 08 December 2009 is hereby **VACATED**.

The application is being returned to the RO/US for continued processing.

/Daniel Stemmer/

Daniel Stemmer
Legal Examiner
PCT Legal Affairs
Office of Patent Cooperation Treaty
Legal Administration
Telephone: (571) 272-3301

Enc: Corrected Form PCT/RO/105
Request (Form PCT/RO/101), page 1

cc: International Bureau
34, Chemin des Colombettes
1211 Geneva 20
Switzerland

United States Patent and Trademark Office

Commissioner for Patents
United States Patent and Trademark Office
P.O. Box 1450
Alexandria, VA 22313-1450
www.uspto.gov

MAILED

FEB 07 2011

PCT LEGAL ADMINISTRATION

Barbara B. Courtney
COURTNEY STANIFORD & GREGORY LLP
P.O. Box 9686
San Jose, CA 95157

In re Application of
GLOBAL VR
Int. Appl. No.: PCT/US09/36713
Int. Filing Date: 10 March 2009
Priority Date: 10 March 2008
Attorney's Docket No.: GBVR.P006WO
For: HIGHER OR LOWER POKER GAME

DECISION ON REQUEST TO WITHDRAW AS ATTORNEY OR AGENT

This Office is in receipt of a "Request for Withdrawal as Attorney or Agent and Change of Correspondence Address" filed 18 August 2010 requesting withdrawal of Barbara B. Courtney, et al as agents of record in the international application identified above. The request is DISMISSED as MOOT as there is no Power of Attorney of record in the application file. The correspondence address has been changed in the USPTO records as follows:

GLOBAL VR
2350 Zanker Road
San Jose, CA 95131

Please be advised that a renunciation of appointment of agents and/or a request to change the correspondence address under PCT Rule 92bis will not be recorded by the International Bureau after the expiration of 30 months from the earliest priority date. Counsel is reminded that USPTO customer numbers practice does not apply to PCT applications in the international stage. See MPEP 1807.

Richard Cole
PCT Legal Examiner
Office of PCT Legal Administration

Jeremy Fleming
Paralegal Specialist
Office of PCT Legal Administration

Tel: (571) 272-3284
Fax: (571) 273-0459

JSF/RC:jf

20 SEP 2010

UNITED STATES PATENT AND TRADEMARK OFFICE

Commissioner for Patents
United States Patent and Trademark Office
P.O. Box 1450
Alexandria, VA 22313-1450
www.uspto.gov

Allan A. Fanucci
WINSTON & STRAWN LLP
Patent Department
1700 K Street, N.W.
Washington, DC 20006-3817

In re Application of :
S.O.I.TEC SILICON ON INSULATOR :
TECHNOLOGIES :
PCT No.: PCT/US2009/044365 :
Int. Filing Date: 18 May 2009 : **DECISION**
Priority Date: 30 June 2008 :
Attorney's Docket No.: 4717-28401 :
For: SUBSTRATE COMPRISING DIFFERENT :
TYPES OF SURFACES AND METHOD FOR :
OBTAINING SUCH SUBSTRATES :

This decision is in response to the "Petition Under 37 CFR § 1.10(e)" filed with the United States Receiving Office (RO/US) on 04 June 2010. This is treated as a petition under 37 CFR 1.181. No fee is required.

BACKGROUND

On 18 May 2009, applicant filed international application PCT/US2009/044365 claiming priority to French patent application No. 0803697 filed 30 June 2008 and United States provisional application No. 61/093,920 filed 03 September 2008.

On 01 June 2009, applicant purportedly filed several papers with the RO/US including a request to correct the French priority claim number to FR 0803700 filed 30 June 2008. These papers were not located in the subject application.

On 23 March 2010, the International Bureau mailed a Notification Relating to Priority Claim (Form PCT/IB/318) stating that applicant's request to correct the French priority claim could not be made as the request was not received until 05 March 2010, which is after the expiration of the prescribed time limit under PCT Rule 26*bis*.1(a).

On 04 June 2010, applicant filed the instant petition which was accompanied by, *inter alia*, a copy of the documents purportedly filed 01 June 2009, and a date-stamped postcard receipt for those documents.

DISCUSSION

In the subject petition, applicant requests that the RO/US accord a filing date of 01 June 2009 for their request to correct the French priority claim.

A review of the above-identified international application reveals that the documents purportedly filed 01 June 2009 were not located in the file. Nonetheless, MPEP 503 lists procedures to ensure receipt of any paper filed. A postcard receipt which itemizes and properly identifies the papers which are being filed serves as *prima facie* evidence of receipt in the USPTO of all the items listed thereon on the date stamped thereon by the USPTO.

In the petition, applicant has provided a copy of a date-stamped postcard receipt for the documents filed 01 June 2009. The postcard receipt clearly identifies the application by applicant, title, docket number, and PCT number. The postcard receipt acknowledges that a "Request for Correction of Priority Claim Under PCT Rule 26bis and Submission of Certified Priority Document," a "Certified Copy of French Patent Application No. 0803700 filed on 30 June 2008" and "A replacement page 2/4 of the PCT Request with the correct priority" were received in the USPTO. The postcard receipt is stamped "IAP19 Rec'd PCT/PTO 01 JUN 2009" across its face.

Applicant has submitted *prima facie* evidence that the request to correct the French priority claim was originally received by the RO/US on 01 June 2009. As such, the request to correct the priority claim was submitted within the time limit of 16 months pursuant to PCT Rule 26*bis*.1(a) and is hereby granted.

CONCLUSION

Applicant's petition under 37 CFR 1.181 is **GRANTED**.

A Notification Relating to Priority Claim (Form PCT/RO/111) correcting the priority claim French patent application No. 0803697 filed 30 June 2008 to French patent application No. 0803700 filed 30 June 2008 will be mailed with this decision.

This application is being returned to the RO/US for further processing. A copy of this decision will be sent to the International Bureau.

James Thomson
Attorney Advisor
Office of PCT Legal Administration

Tel.: (571) 272-3302

cc: The International Bureau of WIPO
34, chemin des Colombettes
1211 Geneva 20
Switzerland

UNITED STATES PATENT AND TRADEMARK OFFICE

21 SEP 2010

Commissioner for Patents
United States Patent and Trademark Office
P.O. Box 1450
Alexandria, VA 22313-1450
www.uspto.gov

Allan A. Fanucci
Winston & Strawn LLP
Patent Department
1700 K Street, N.W.
Washington, District of Columbia 20006-3817

In re Application of: S.O.I.TEC SILICON ON INSULATOR TECHNOLOGIES
PCT No.: PCT/US2009/044372
International Filing Date: 18 May 2009
Priority Date: 30 June 2008
Attorney Docket No.: 4717-28301
For: METHODS OF MANUFACTURING SEMICONDUCTOR STRUCTURES AND SEMICONDUCTOR STRUCTURES OBTAINED BY SUCH METHODS

DECISION ON PETITION

This decision is issued in response to applicant's "Petition Under 37 CFR § 1.10(e)" filed with the United States Receiving Office (RO/US) on 04 June 2010 treated herein as a petition under 37 CFR 1.181. No fee is required.

BACKGROUND

On 18 May 2009, applicant filed international application PCT/US2009/044372 claiming priority to French patent application No. 0803697 filed 30 June 2008 and United States provisional application No. 61/093,902 filed 03 September 2008.

On 01 June 2009, applicant purportedly filed several papers with the RO/US including a request to correct the French priority claim number to FR 0803676 filed 30 June 2008. These papers were not located in the subject application.

On 23 March 2010, the International Bureau mailed a Notification Relating to Priority Claim (Form PCT/IB/318) stating that applicant's request to correct the French priority claim could not be made as the request was not received until 05 March 2010, which is after the expiration of the prescribed time limit under PCT Rule 26*bis*.1(a).

On 04 June 2010, applicant filed the instant petition which was accompanied by, *inter alia*, a copy of the documents purportedly filed 01 June 2009, and a date-stamped postcard receipt for those documents.

DISCUSSION

In the subject petition, applicant requests that the RO/US accord a filing date of 01 June 2009 for their request to correct the French priority claim.

A review of the above-identified international application reveals that the documents purportedly filed 01 June 2009 were not located in the file. Nonetheless, MPEP 503 lists procedures to ensure receipt of any paper filed. A postcard receipt which itemizes and properly identifies the papers which are being filed serves as prima facie evidence of receipt in the USPTO of all the items listed thereon on the date stamped thereon by the USPTO.

In the petition, applicant has provided a copy of a date-stamped postcard receipt for the documents filed 01 June 2009. The postcard receipt clearly identifies the application by applicant, title, docket number, and PCT number. The postcard receipt acknowledges that a "Request for Correction of Priority Claim Under PCT Rule 26bis and Submission of Certified Priority Document," a "Certified Copy of French Patent Application No. 0803676 filed on 30 June 2008" and "A replacement page 2/4 of the PCT Request with the correct priority" were received in the USPTO. The postcard receipt is stamped "IAP19 Rec'd PCT/PTO 01 JUN 2009" across its face.

Applicant has submitted prima facie evidence that the request to correct the French priority claim was originally received by the RO/US on 01 June 2009. As such, the request to correct the priority claim was submitted within the time limit of 16 months pursuant to PCT Rule 26bis.1(a) and is hereby granted.

CONCLUSION

Applicant's petition under 37 CFR 1.181 is GRANTED.

A Notification Relating to Priority Claim (Form PCT/RO/111) correcting the priority claim French patent application No. 0803697 filed 30 June 2008 to French patent application No. 0803676 filed 30 June 2008 will be mailed with this decision.

This application is being returned to the RO/US for further processing. A copy of this decision will be sent to the International Bureau.

Anthony Smith
Attorney-Advisor
Office of PCT Legal Administration
Tel: (571) 272-3298
Fax: (571) 273-0459

UNITED STATES PATENT AND TRADEMARK OFFICE

Commissioner for Patents
United States Patent and Trademark Office
P.O. Box 1450
Alexandria, VA 22313-1450
www.uspto.gov

MAILED

FEB 08 2011

PCT LEGAL ADMINISTRATION

DENNIS SMALLEY
7911 HASKELL AVENUE
VAN NUYS CA CALIFORNIA 91406

In re Application of:	:	
MICROFABRICA, INC.	:	
PCT No.: PCT/US2009/048347	:	DECISION ON
International Filing Date: 23 June 2009	:	PETITION UNDER
Priority Date: 23 June 2008	:	37 CFR 1.181
Attorney's Docket No.: P-WO266-A-MF	:	
For: MINIATURE SHREDDING TOOL FOR USE IN MEDICAL APPLICATIONS AND METHODS FOR MAKING	:	

This decision is issued in response to the petition filed 13 December 2010 in the United States Patent and Trademark Office (USPTO). The petition is being treated under 37 CFR 1.181. No petition fee is required.

On 23 June 2009, applicant filed the above-captioned international application in the United States Receiving Office (RO/US). The application did not contain a priority claim.

On 14 October 2009, applicant filed replacement sheets identifying three priority applications.

On13 December 2010, applicant filed the petition considered herein containing copies of the papers purportedly filed on 14 October 2010 and asked for their consideration.

A review of the international application file finds applicant's original filing of 14 October 2009 contained therein. The paper clearly indicates that the three priority claims have now been listed in the attached corrected PCT Request. As such, there is no need to consider applicant's petition under 37 CFR 1.181 and it is **DISMISSED as moot**.

This application is being forwarded to the RO/US for further processing in accordance with this decision; including adding the three priority claims timely submitted by applicant.

Derek A. Putonen
Attorney Advisor
Office of PCT Legal Administration
Tel: (571) 272-3294

UNITED STATES PATENT AND TRADEMARK OFFICE

Commissioner for Patents
United States Patent and Trademark Office
P.O. Box 1450
Alexandria, VA 22313-1450
www.uspto.gov

MAILED

JAN 27 2011

PCT LEGAL ADMINISTRATION

ADAM M. BRAMWELL
DORSEY & WHITNEY LLP
SUITE 1500
50 SOUTH SIXTH STREET
MINNEAPOLIS MN 55402-1498

In re Application of	:	
TIMBERWOLF Corporation	:	
PCT No.: PCT/US2009/054460	:	DECISION ON
Int. Filing Date: 20 August 2009	:	
Priority Date: 29 August 2008	:	PETITION
Attorney's Docket No.: 186256/PCT/2	:	
For: MULTI-LAYERED COMPOSITE SYSTEM AND METHOD	:	UNDER 37 CFR 1.181

This decision is on applicants' Petition and Request For Refund, filed in the United States Receiving Office on 30 August 2010.

BACKGROUND

On 20 August 2009, applicants submitted to the United States Receiving Office (RO/US), *inter alia*, a Request, description, claims, abstract, drawings, and a Fee calculation sheet. The Fee Calculation Sheet provided "authorization to charge the total fees indicated above," and "authorization to charge any deficiency," listed the deposit account no. as 04-1420 and was signed by Adam Bramwell.

On 27 August 2009, RO/US mailed, a Notification Concerning Payment of Prescribed Fees (Form PCT/RO/102) and a Notification of the International Application Number and of the International Filing Date (Form PCT/RO/105). The Notification indicated that fees had not been paid.

On 20 October 2009, RO/US mailed Invitation to Pay Prescribed Fees Together With Late Payment Fee (Form PCT/RO/133), which indicated that applicants had an outstanding balance of $4066.50 and that applicant had one month from mailing to pay the fees together with late payment fee or the application would be withdrawn.

On 08 December 2009, the Office charged the outstanding fees to the deposit account and mailed Notification of Receipt of Search Copy (Form PCT/ISA/202).

On 22 January 2010, applicants filed this request for a refund.

On 24 June 2010, the Office mailed Decision On Petition, refusing applicant's request for refund.

On 30 August 2010, applicants filed a renewed request for refund.

DISCUSSION

On 20 August 2009, applicants filed the above application and authorized the USPTO to charge the required fees to deposit account no. 04-1420. The fees were paid effective 20 August 2009, regardless of when the fees were processed. See 37 CFR 1.25(b) (indicating that barring insufficient funds, authorization to charge is payment on the date of authorization).

Applicant is not entitled to a refund under 37 CFR 1.446. The fees were not paid by mistake, rather applicant had a change of purpose. Withdrawal of an international application is covered by PCT Rule 90*bis*.1 and a request to refund surplus fees signed by the three applicants or by an agent or common representative appointed in accordance with PCT Rule 90 would have been required. Applicants did not attempt to withdraw this application.

CONCLUSION

For the reasons set forth above, the request for the refund of fees paid in the international application is **DISMISSED** without prejudice.

Any further correspondence with respect to this matter may be filed electronically via EFS-Web selecting the document description "Petition for review and processing by the PCT Legal Office" or by mail addressed to Mail Stop PCT, Commissioner for Patents, Office of PCT Legal Administration, P.O. Box 1450, Alexandria, Virginia 22313-1450, with the contents of the letter marked to the attention of the Office of PCT Legal Administration.

The application is being returned to the RO/US for continued processing.

/Erin P. Thomson/

Erin P. Thomson
Attorney Advisor
PCT Legal Administration

Telephone: 571-272-3292

UNITED STATES PATENT AND TRADEMARK OFFICE

Commissioner for Patents
United States Patent and Trademark Office
P.O. Box 1450
Alexandria, VA 22313-1450
www.uspto.gov

Homer W. Faucett, III
Ice Miller LLP
One American Square, Suite 2900
Indianapolis IN 46282-0200

MAILED

FEB 14 2011

PCT LEGAL ADMINISTRATION

In re Application of:
AQUA MANNA LLC
PCT No.: PCT/US2009/054522
Inter Filing Date: 20 August 2009
Priority Date: None
Attorney's Docket No.: P01929WO00
For: WASTEWATER TREATMENT APPARATUS

DECISION

This decision is issued in response to applicant's "Petition to Acknowledge and Implement a Priority Claim" filed 14 January 2011 which is being treated as a petition under 37 CFR 1.182 to add a priority claim to the above-identified international application.

BACKGROUND

The United States Receiving Office accorded an international filing date of 20 August 2009 to the above-identified international application. No priority claim was indicated in Box No. VI of the Request (Form PCT/RO/101).

On 31 August 2009, the United States Receiving Office mailed the following: Notification Concerning Payment of Prescribed Fees (Form PCT/RO/102); Notification of the International Application Number and of the International Filing Date (Form PCT/RO/105); and Notification of Receipt of Search Copy (Form PCT/ISA/202). No priority date was listed.

On 14 January 2011, applicant filed the present "Petition to Acknowledge and Implement a Priority Claim."

DISCUSSION

As stated above, applicant failed to indicate a priority claim in Box VI on the PCT Request (Form PCT/RO/101). Applicant's 14 January 2011 submission will be treated as a request to correct priority claim under PCT Rule 26bis. PCT Rule 26bis states:

> The applicant may correct or add a priority claim by a notice submitted to the receiving Office or the International Bureau within a

> time limit of 16 months from the priority date or, where the correction or addition would cause a change in the priority date, 16 months from the priority date as so changed, whichever 16-month period expires first, provided that such a notice may be submitted until the expiration of four months from the international filing date. The correction of a priority claim may include the addition of any indication referred to in Rule 4.10.

It is noted that 14 January 2011 submission is more than 16 months after the priority date (20 August 2008), and that the request to correct priority claim is not timely filed under PCT Rule 26bis. Therefore, the request is refused under PCT Rule 26bis.

Further, applicant states in the present petition, "the specification for the above-referenced application unambiguously expresses the Applicant's intent to claim a priority date of August 20, 2008 (the filing date of United States Provisional Application Serial No. 61/090,936), a corresponding priority claim was inadvertently omitted from Box VI of the Request." PCT Rule 91.1(g)(iv) states, that a mistake shall not be rectifiable under this Rule if the mistake is in a priority claim or in a notice correcting or adding a priority claim under Rule 26bis.1(a), where the rectification of the mistake would cause a change in the priority date. Since adding the above requested priority claim would cause a change in the priority date, applicant's request is refused under PCT 91.1.

Therefore, applicant's petition under 37 CFR 1.182 is dismissed without prejudice.

CONCLUSION

For the reasons set forth above, applicant's petition is **DISMISSED** without prejudice.

If reconsideration on the merits of this petition is desired, a proper response must be filed within TWO (2) MONTHS from the mail date of this decision. Any reconsideration request should include a cover letter entitled "Renewed Petition Under 37 CFR 1.182." No additional petition fee is required.

Any further correspondence with respect to this matter may be filed electronically via EFS-Web selecting the document description "Petition for review and processing by the PCT Legal Office" or by mail addressed to Mail Stop PCT, Commissioner for Patents, Office of PCT Legal Administration, P.O. Box 1450, Alexandria, Virginia 22313-1450, with the contents of the letter marked to the attention of the Office of PCT Legal Administration.

Anthony Smith
Attorney-Advisor
Office of PCT Legal Administration
Tel: (571) 272-3298
Fax: (571) 273-0459

UNITED STATES PATENT and TRADEMARK OFFICE

COMMISSIONER FOR PATENTS
UNITED STATES PATENT AND TRADEMARK OFFICE
P.O BOX 1450
ALEXANDRIA, VA 22313-1450
www.uspto.gov

MAILED

MAY 19 2011

PCT LEGAL ADMINISTRATION

BARRY J. SCHINDLER
GREENBERG TRAURIG LLP
MET LIFE BUILDING
200 PARK AVENUE
NEW YORK NY NEW YORK 10166

In re Application of	:	DECISION ON
ANGIBAUD et al	:	
PCT No.: PCT/US09/56691	:	
Int. Filing Date: 11 September 2009	:	PETITION
Priority Date: 12 September 2008	:	
Attorney's Docket No.: 019870.071801	:	
For: SYSTEMS AND METHODS...	:	UNDER 37 CFR 1.182
STABLIZING TYPE PROSTHESIS	:	

This decision is response to applicant's "PETITION FOR REVIEW AND PROCESSING... UNDER THE PCT" filed on 09 March 2011, which is being treated as a petition under 37 CFR 1.182. The petition fee has been charged to Deposit Account No.: 50-1561.

BACKGROUND

On 11 September 2009, applicant filed the above captioned PCT application in the United States Receiving Office (RO/US).

On 24 September 2009, the RO/US mailed an INVITATION TO CORRECT DEFECTS IN THE INTERNATIONAL APPLICATION (Form PCT/RO/106), which indicated defects in the drawings.

On 23 November 2009, applicant filed a "Response to The Invitation to Correct Defects," which included a complete set of substitute drawings numbered in consecutive numerals.

On 17 December 2009, the International Bureau (IB) mailed a COMMUNICATION IN CASES FOR WHICH NO OTHER FORM IS APPLICABLE (Form PCT/IB/345), indicating that the receipt of the substitute sheets for the Drawings has not been entered into the records since they contain extra Text/Lines which did not exist in the Drawings as originally filed so the drawings have not accepted under Rule 26.

On 09 March 2011, petitioner filed the current petition requesting that the USPTO accept the substitute set of drawings filed with the receiving Office (RO/US) on November 23, 2009.

DISCUSSION

A review of the file reveals that the substitute drawings filed on 23 November 2009 contain extra Text/Lines which did not exist in the Drawings as originally filed (e.g. fig 1). As a result, applicant should have requested that the substitute drawings be accepted under PCT Rule 91.1(c) as a rectification of an obvious mistake.

As such, it is noted that obvious mistakes may be corrected before the United States International Searching (ISA/US) in accordance with the PCT Rule 91.1(c), which provides that "The competent authority shall authorize the rectification under this Rule of a mistake if, and only if, it is obvious to the competent authority that, as at the applicable date under paragraph (f), something else was intended than what appears in the document concerned and that nothing else could have been intended than the proposed rectification."

Analyzing the present changes proposed to the drawings for above application are not rectifications of obvious mistakes permitted under Rule 91.1(c) as it is not obvious to the ISA/US that a mistake was made in the drawings and it is not obvious that what is offered as rectification is what was specifically intended in the drawings as originally filed. Accordingly, the later filed drawings would not have been entered as Rectification of Obvious Mistakes under PCT Rule 91. Consequently, the communication mailed by the IB on 17 December 2009 was proper.

Applicant is advised that if substitute drawings were not entered during the International Phase, applicant may submit these changes as preliminary amendments upon entry into the National Stage Phase.

CONCLUSION

For the above reason above, the petition under 37 CFR 1.182 is **DISMISSED.**

If reconsideration of the merits of the petition under 37 CFR 1.182 is desired, applicant must file a request for reconsideration within **TWO (2) MONTHS** from the mail date of this Decision. Any reconsideration request should include a cover letter entitled "Renewed Petition Under 37 CFR 1.182."

Any further correspondence with respect to this matter may be filed electronically via EFS-Web selecting the document description "Petition for review and processing by the PCT Legal Office" or by mail addressed to Mail Stop PCT, Commissioner for Patents, Office of PCT Legal Administration, P.O. Box 1450, Alexandria, Virginia 22313-1450, with the contents of the letter marked to the attention of the Office of PCT Legal Administration.

Rafael Bacares
PCT Legal Examiner
PCT Legal Office
Tel: (571) 272-3276
Fax: (571) 273-0459

UNITED STATES PATENT AND TRADEMARK OFFICE

Commissioner for Patents
United States Patent and Trademark Office
P.O. Box 1450
Alexandria, VA 22313-1450
www.uspto.gov

RUDY NG
1900 UNIVERSITY AVENUE
SUITE 200
EAST PALO ALTO CA 94303

MAILED

APR 08 2011

PCT LEGAL ADMINISTRATION

In re Application of:
EMERACHEM, LLC
PCT No.: PCT/US2009/062847
International Filing Date: 30 October 2009
Priority Date: 31 October 2008
Attorney's Docket No.: ECHM-001WO
For: METHODS AND SYSTEMS FOR REDUCING PARTICULATE MATTER IN A GASEOUS STREAM

DECISION ON PETITION UNDER 37 CFR 1.181

This decision is issued in response to the petition filed 14 May 2010 in the United States Patent and Trademark Office (USPTO) to correct the international filing date. The petition is being treated under 37 CFR 1.181. No petition fee is required.

On 30 October 2009, applicant filed the above-captioned international application in the United States Receiving Office (RO/US).

On14 May 2010, applicant filed the petition considered herein.

A review of the international application file finds that applicant was mailed a "Notification of the International Application Number and of the International Filing Date" (Form PCT/RO/105) on 06 November 2009 indicating an international filing date of 30 October 2009. As such, there is no need to consider applicant's petition under 37 CFR 1.181 and it is **DISMISSED as moot**.

This application is being forwarded to the RO/US for further processing in accordance with this decision. A copy of the Form PCT/RO/105 and a corrected first page of applicant's PCT Request form indicating an international filing date of 30 October 2009 accompany this decision.

Derek A. Putonen
Attorney Advisor
Office of PCT Legal Administration
Tel: (571) 272-3294

UNITED STATES PATENT AND TRADEMARK OFFICE

Commissioner for Patents
United States Patent and Trademark Office
P.O. Box 1450
Alexandria, VA 22313-1450
www.uspto.gov

MAILED

DEC 07 2010

PCT LEGAL ADMINISTRATION

PAUL D. GREELEY
OHLANDT, GREELEY, RUGGIERO & PERLE, LLP
ONE LANDMARK SQUARE, 10 TH FLOOR
STAMFORD CT CONNECTICUT 06901-2682

In re Application of:
LUMEN DEVICES LLC
PCT No.: PCT/US2009/065914
International Filing Date: 25 November 2009
Priority Date Claimed: 25 November 2008
Attorney Docket No.: 0005150WOU/
For: DEVICE, SYSTEMS AND METHODS FOR THE TREATMENT OF SLEEP APNEA

DECISION ON RENEWED REQUEST FOR WITHDRAWAL AND REFUND REQUEST

The present decision is issued in response to the "Second Renewed Petition For Withdrawal Of Application And Refund Of Application Fees Under 37 CFR 1.446(a)" filed 08 September 2010. No petition fee is required.

BACKGROUND

The procedural background for the present application was set forth in the decisions mailed herein on 17 March 2010 and 14 July 2010. The decisions dismissed without prejudice applicant's request to withdraw the present application and for a refund of the fees filed herein. The request to withdraw the international application was dismissed because petitioner had not filed an acceptable power of attorney from applicant Lumen Devices, LLC. The decisions also noted that the fees paid herein are not refundable under the present circumstances.

On 08 September 2010, applicant filed the Second Renewed Petition For Withdrawal Of Application And Refund Of Application Fees Under 37 CFR 1.446(a)" considered herein.

DISCUSSION

1. Renewed Request To Withdraw Application

The present submission includes an acceptable power of attorney from corporate applicant Lumen Devices, LLC, appointing petitioner as agent herein. Petition has previously filed acceptable power of attorneys from each of the individual applicant/inventors.

In view of the submission of the required power of attorney forms, petitioner's present renewed request for withdrawal of the international application under PCT Rule 90bis.1 is appropriately granted. International application PCT/US2009/065914 is considered withdrawn as

of 08 September 2010, the date on which the effective withdrawal was received in the United States Receiving Office (RO/US).

2. **Request For Refund**

Applicant requests a refund of the fees paid herein pursuant to 37 CFR 1.446(a), which permits a refund of fees "paid by actual mistake or in excess, such as a payment not required by law or treaty and its regulations." However, the transmittal, search and international filing fees paid by applicant herein were the appropriate fees required for the international application and are not considered to have been paid "by actual mistake or in excess" within the meaning of 37 CFR 1.446(a). Note that 37 CFR 1.446(a) states that the "mere change of purpose after the payment of a fee will not entitle a party to a refund of such fee."

Moreover, as set forth in the previous decisions, the fees paid herein are not refundable under the applicable PCT Rules. With respect to the search fee, PCT Rule 16.2 sets forth the limited circumstances where a refund is appropriate. The present application, where the effective withdrawal of the international application was not submitted prior to the transmittal of the search copy to the ISA/US, does not fall within any of the categories set forth in PCT Rule 16.2. Accordingly, a refund of the search fee is not appropriate in the present circumstances.

With respect to the international fee, PCT Rule 15.6 sets forth the limited circumstances where a refund is appropriate. The present application, where the effective withdrawal of the international application was not submitted prior to the transmittal of the record copy to the IB, does not fall within any of the categories set forth in PCT Rule 15.6. Accordingly, a refund of the search fee is not appropriate in the present circumstances.

With respect to the transmittal fee, the PCT includes no mechanism for a refund, and 37 CFR 1.446(d) expressly states that such fee is not refundable.

In view of the above, applicant's request for a refund of the fees paid herein is appropriately dismissed.

CONCLUSION

Applicant's request to withdraw the international application under PCT Rule 90bis.1 is **GRANTED**.

International Application PCT/US2009/065914 is **WITHDRAWN** as of 08 September 2010.

Pursuant to PCT Rules 15.6 and 16.2 and 37 CFR 1.446, applicant's accompanying request for a refund of the fees paid herein is **DISMISSED** without prejudice.

A Notification of Withdrawal (Form PCT/RO/136) confirming the 08 September 2010 withdrawal of the international application will be forwarded to the International Bureau.

/RichardMRoss/

Richard M. Ross
Attorney Advisor
Office of PCT Legal Administration
Telephone: (571) 272-3296
Facsimile: (571) 273-0459

UNITED STATES PATENT AND TRADEMARK OFFICE

Commissioner for Patents
United States Patent and Trademark Office
P.O. Box 1450
Alexandria, VA 22313-1450
www.uspto.gov

MAILED

JAN 14 2011

PCT LEGAL ADMINISTRATION

JAMES J. LEARY
524 DEER POINTE CT
FENTON, MO 63026

In re Application of
BELSON, Amir, et al.
PCT No.: PCT/US2010/000430
Int. Filing Date: 03 May 2010
Priority Date: 17 September 2009
Docket No.: None
For: RAPID CLOSING SURGICAL CLOSURE DEVICE

DECISION ON

PETITION

UNDER 37 CFR 1.181

This decision is in response to applicant's Petition Under 37 CFR 1.181 filed with the United States Patent and Trademark Office on 12 October 2010.

BACKGROUND

On 16 February 2010, applicants filed a Request (Form PCT/RO/101), accompanied by, *inter alia*, description, claims and drawings.

On 01 March 2010, the Office mailed Notification of the International Application Number and of the International Filing Date (Form PCT/DO/EO/105) indicating that the application had a international filing date of 16 February 2010 and a priority date of 13 February 2009; Invitation to Correct Defects in the International Application (Form PCT/RO/106); Notification Regarding Certain Corrections Made *Ex Officio* (Form PCT/RO/146) indicating that changes were made to page 4 of the Request and including those changes and Invitation Relating to Certain Parts of the International Application That Are Or Appear To Be Missing (Form PCT/RO/107) indicating that Figure 49, referenced on page 5 of the description was not found.

On 03 May 2010, applicants filed "Submission of Replacement Sheet" accompanied by figure 49.

On 28 May 2010, the Office mailed a second Notification of the International Application Number and Of the International Filing Date (Form PCT/RO/105) indicating that the international filing date was now 03 May 2010 and priority date was 17 September 2009; an Invitation to Correct Priority Claim and/or Notification of Possibility to Request Restoration of the Right of Priority (Form PCT/RO/110) indicating that the filing date of application 61/207,557 did not fall within the twelve months prior to the filing of the international application; and aNotification Concerning Later Submitted Parts of an International Application (Form PCT/RO/126) indicating that missing parts were received on 03 May 2010, within two months of the 01 March 2010 invitation. Accordingly, the international filing date was changed to 03 May 2010. The Notification further indicated that if applicants desired that the Office disregard the later submitted part, applicant had to notify the Office within one month of the Notification, as set out in PCT Rule 20.5(e).

On 12 October 2010, applicants filed this Request to disregard the later submitted drawing and to change the international filing date back to 16 February 2010.

DISCUSSION

The Form PCT/RO/107 mailed 01 March 2010, advised applicants that papers submitted after the international filing date, but within the two month time period, other than those included through

incorporation by reference, would result in correction of the international filing date to the date of the receipt of the later filed papers. The Form PCT/RO/107 further advised that papers received after twelve months from the priority date may result "not only in the international filing date being corrected, but also in the priority claim being considered void for the purposes of procedures under the PCT [...] ."

Applicants submitted figure 49 on 03 May 2010 (01 May 2010 was a Saturday). Form PCT/RO/126 mailed 28 May 2010, indicated that missing sheet was received on 03 May 2010, within two months of the 01 March 2010 invitation. Accordingly, the international filing date was changed to 03 May 2010. Form PCT/RO/126 further indicated that if applicants desired that the Office disregard the later submitted part, applicant had to notify the Office within one month of the Notification, as set out in PCT Rule 20.5(e).

Applicants state that the person responsible for their application was out of the country from mid-May through late August and did not have his mail reviewed in that time. Applicants received Form PCT/RO/126 upon that person's return. Applicants did not change the correspondence address in this application. The Office maintained correspondence with the address of record. Applicants' request that the Office disregard the time limit set out in PCT Rule 20.5(e), but assert no legal basis for this request.

Regardless of the Form PCT/RO/126, the Form PCT/RO/107 warned applicants that inclusion of the missing part other than through incorporation by reference would result in a change in the international filing date and could result in a loss of priority date. With this knowledge, applicants submitted the missing page on 03 May 2010, the international filing date was changed and the priority claim lost.

CONCLUSION

For the reasons discussed above, applicants' petition under 37 CFR 1.181 is **DISMISSED** without prejudice.

Any further correspondence with respect to this matter may be filed electronically via EFS-Web selecting the document description "Petition for review and processing by the PCT Legal Office" or by mail addressed to Mail Stop PCT, Commissioner for Patents, Office of PCT Legal Administration, P.O. Box 1450, Alexandria, Virginia 22313-1450, with the contents of the letter marked to the attention of the Office of PCT Legal Administration.

/Erin P. Thomson

Erin P. Thomson
Attorney Advisor
PCT Legal Administration

Telephone: 571-272-3292

UNITED STATES PATENT AND TRADEMARK OFFICE

Commissioner for Patents
United States Patent and Trademark Office
P.O. Box 1450
Alexandria, VA 22313-1450
www.uspto.gov

JOHN P. WHITE
COOPER & DUNHAM LLP
30 ROCKEFELLER PLAZA
NEW YORK NY NEW YORK 10112

MAILED
JUL 18 2011
PCT LEGAL ADMINISTRATION

In re Application of :
THE TRUSTEES OF COLUMBIA UNIVERSITY IN THE CITY OF NEW YORK :
PCT No.: PCT/US10/00613 :
Int. Filing Date: 01 March 2010 :
Priority Date: 28 February 2009 :
Attorney Docket No.: 79816-A-PCT/JPW/ws :
For: POLYAMINE INHIBITORS FOR THE TREATMENT AND PREVENTION OF PARKINSON'S DISEASE

DECISION ON PETITION
UNDER 37 CFR 1.10 (h)

This decision is issued in response to applicant's "Petition Under 37 CFR 1.10(h) to Request That the PCT International Application be Deemed as Having Been Filed on February 26, 2010" filed 25 February 2011 in the United States Patent and Trademark Office (USPTO). No petition fee is required.

BACKGROUND

The United States Receiving Office accorded an international filing date of 01 March 2010 to the above-identified international application.

On 25 February 2011, applicant filed the petition considered herein. The petition states that the filing date for application should be corrected to 26 February 2010, in that, applicant's representative was prevented from filing the above-identified application on 26 February 2010 due to an interruption of United States Express Mail service.

DISCUSSION

Applicant presently requests that the USPTO accord the above-identified international

application a filing date of 26 February 2010. A review of the file reveals that the RO/US correctly accorded an international filing date of 01 March 2010 pursuant to 37 CFR 1.10(a). In the subject petition, petitioner argues that applicant's representative was prevented from filing the above-identified application on 26 February 2010 due to an interruption of United States Express Mail service.

37 CFR 1.10(h) provides:

Any person who attempts to mail correspondence addressed as set out in § 1.1(a) to the Office with sufficient postage utilizing the "Express Mail Post Office to Addressee" service of the USPS, but has the correspondence refused by an employee of the USPS due to an interruption or emergency in "Express Mail"service, may petition the Director to consider such correspondence as filed on a particular date in the Office, provided that:

> (1) The petition is filed promptly after the person becomes aware of the refusal of the correspondence;
>
> (2) The number of the "Express Mail" mailing label was placed on the paper(s) or fee(s) that constitute the correspondence prior to the attempted mailing by "Express Mail";
>
> (3) The petition includes the original correspondence or a copy of the original correspondence showing the number of the "Express Mail" mailing label thereon; and
>
> (4) The petition includes a statement by the person who originally attempted to deposit the correspondence with the USPS which establishes, to the satisfaction of the Director, the original attempt to deposit the correspondence and that the correspondence or copy of the correspondence is the original correspondence or a true copy of the correspondence originally attempted to be deposited with the USPS on the requested filing date. The Office may require additional evidence to determine if the correspondence was refused by an employee of the USPS due to an interruption or emergency in "Express Mail" service.

To obtain relief under 37 CFR 1.10(h), the correspondence must be "refused by an employee of the USPS". MPEP §513 states this procedure does not apply because "a Post Office facility is closed". Accordingly, relief cannot be granted under 37 CFR 1.10(h).[1]

[1]It is noted that the petition must be filed promptly after the person becomes aware of the refusal of the correspondence. Here, the petition was filed nearly one year after the attempt to deposit the correspondence.

Petitioner states in the present petition that he was prevented from filing the above-identified application on 26 February 2010 due to an interruption of United States Express Mail service; that is, the early closure of the window service at the Grand Central Station and the James A. Farley Office. Petitioner has presented a statement from A. Campagnola, Tour Supérintendent Postal Operations, Grand Central Post Office, which indicates that "due to unforeseen circumstances, the snowstorm on Friday, February 26, 2010 our window services were closed at 5:00 pm". A further statement from P. Kessler, Consumer Affairs Analyst, New York District, indicates that "supervisors periodically review and adjust service hours to meet changing conditions. Also the staff of the Post Office may not be large enough to permit all-day window operation." Petitioner has not presented proof that the correspondence was refused by an employee of the USPS due to an interruption or emergency in "Express Mail" service. Accordingly, the requirements under 37 CFR 1.10(h) have not been satisfied.

CONCLUSION

Applicant's petition under 1.10(h), requesting that the international application be accorded an international filing date of 26 February 2010, is **DISMISSED** without prejudice.

The international filing date remains 01 March 2010.

Any further correspondence with respect to this matter may be filed electronically via EFS-Web selecting the document description "Petition for review and processing by the PCT Legal Office" or by mail addressed to Mail Stop PCT, Commissioner for Patents, Office of PCT Legal Administration, P.O. Box 1450, Alexandria, Virginia 22313-1450, with the contents of the letter marked to the attention of the Office of PCT Legal Administration.

Cynthia M. Kratz
/Cynthia M. Kratz/
Attorney-Advisor
Office of PCT Legal Administration
Tel: (571) 272-3286
Fax: (571) 273-0459

UNITED STATES PATENT AND TRADEMARK OFFICE

Commissioner for Patents
United States Patent and Trademark Office
P.O. Box 1450
Alexandria, VA 22313-1450
www.uspto.gov

Kelly J. Hollowell
222 Central Park Avenue, Suite 1700
Virginia Beach, VA 23462

MAILED

SEP 23 2011

PCT LEGAL ADMINISTRATION

In re Application of :
NIMBLE EPITECH :
PCT No.: PCT/US2010/001287 :
Int. Filing Date: 30 April 2010 : DECISION
Priority Date: 05 December 2009 :
Attorney's Docket No.: 058305.0003 :
For: PHARMACEUTICAL COMPOSITION CONTAINING :
A HYPOMETHYLATING AGENT AND A HISTONE :
DEACETYLASE INHIBITOR :

This decision is response to counsel's request to withdraw as attorney of record in the above-captioned international application. The request is **GRANTED**.

The criteria for effecting a proper withdrawal of attorney are spelled out in Section 402.06 of the Manual of Patent Examining Procedure (M.P.E.P.) which reads, in part, as follows:

> In the event that a notice of withdrawal is filed by an attorney or agent of record . . . appropriate procedure will be followed pertaining to the withdrawal. The withdrawal is effective when approved rather than when received.
>
> To expedite the handling of requests for permission to withdraw as attorney or agent, under 37 CFR 1.36, Form PTO/SB/83 may be used. Because the Office does not recognize law firms, each attorney of record must sign the notice of withdrawal, or the notice of withdrawal must contain a clear indication of one attorney signing on behalf of another.

Counsel has satisfied the above criteria and is considered withdrawn. The address of record has been updated to that of the first named inventor.

Derek A. Putonen
Attorney Advisor
Office of PCT Legal Administration
Tel: (571) 272-3294

cc:
NIMBLE EPITECH, LLC
2029 DEL MAR HEIGHTS ROAD
DEL MAR, CALIFORNIA 23462

- 7 SEP 2010

UNITED STATES PATENT AND TRADEMARK OFFICE

COMMISSIONER FOR PATENTS
UNITED STATES PATENT AND TRADEMARK OFFICE
P.O. BOX 1450
ALEXANDRIA, VA 22313-1450
www.uspto.gov

KENNETH H. JACK
ATTORNEY OF RECORD FOR APPLICANT
2121 W. MAPLE
WICHITA, KS 67213

In re Application of DUNBAR	:	
PCT Application No.: PCT/US2010/001448	:	
Int. Filing Date: 17 August 2010	:	DECISION
Priority Date Claimed: 18 May 2009	:	
Attorney Docket No.: Dunbar	:	
For: ASSEMBLY FOR DOORWAY ILLUMINATION	:	

This is in response to applicant's petition filed 17 August 2010, which is being treated under 37 CFR 1.181. No petition fee is due.

BACKGROUND

On 17 May 2010, applicant filed international application papers with the United States Receiving Office (RO/US). The submission was assigned the above-identified International Application Number and an International Filing Date of 17 May 2010.

On 19 July 2010, the RO/US mailed, *inter alia*, a Communication in Cases for Which No Other Form is Applicable (Form PCT/RO/132), which stated that page 12 of the claims appears to be missing.

On 17 August 2010, applicant filed the present petition under 37 CFR 1.181, including a copy of page 12 of the claims which purportedly was filed on 17 May 2010.

DISCUSSION

The petition states that page 12 of the claims was originally filed on 17 May 2010 and includes a copy of a return postcard receipt.

MPEP 503 states in relevant part,

> The identifying data on the postcard should be so complete as to clearly identify the item for which a receipt is requested. For example, the postcard should identify the applicant's name, application number (if known), confirmation number (if known), filing date, interference number, title of the invention, etc. The postcard should also identify the type of paper being filed, e.g., new application, affidavit, amendment, notice of appeal, appeal brief, drawings, fees, motions, supplemental oath or declaration, petition, etc., and the number of pages being submitted. If a new application is being filed, all parts of the application being submitted should be separately listed on the postcard, e.g., the number of pages of specification (including written description, claims and abstract), number of claims, number of sheets of drawings, number of pages of oath/declaration, number of pages of cover sheet (provisional application).
>
> The postcard receipt will not serve as *prima facie* evidence of receipt of any item which is not adequately itemized on the postcard. For example, merely listing on the postcard "a complete application" or "patent application" will not serve as a proper receipt for each of the required components of an application (e.g., specification (including claims), drawings (if necessary), oath or declaration and the application filing fee) or missing portions (e.g., pages, sheets of drawings) of an application if one of the components or portion of a component is found to be missing by the USPTO. Each separate component should be specifically and properly itemized on the postcard.

In the present case, the return postcard receipt is not sufficient to demonstrate that page 12 of the claims was filed on 17 May 2010. In particular, the postcard receipt fails to specifically itemize either the number of claims or the number of claim pages. It is noted that the combined total of specification, claims, and abstract pages would not equal 25 pages as stated on the postcard receipt, even if page 12 of the claims was included.

The petition requests that, even if page 12 of the claims is not treated as having been filed on 17 May 2010, page 12 of the claims be treated as part of the international application (either under PCT Rule 20.5 or under PCT Article 19) without any change to the International Filing Date. However, a missing part received under PCT Rule 20.5(c) necessitates correction of the International Filing Date to the date on which the missing part is received. Furthermore, an amendment under PCT Article 19 cannot be filed until the International Search Report is mailed. Accordingly, pursuant to PCT Rule 20.5(c), the International Filing Date has been corrected to 17 August 2010. However, as stated in PCT Rule 20.5(e) and in Form PCT/RO/126 attached to this decision, applicant may request that the missing part (i.e. page 12 of the claims) be disregarded, in which case the International Filing Date will revert to 17 May 2010. Applicant has one month from the mailing date of Form PCT/RO/126 to request that the missing part be disregarded. Extensions of time are NOT available.

CONCLUSION

For the reasons above, the petition under 37 CFR 1.181 is DISMISSED without prejudice.

Any further correspondence with respect to this matter may be filed electronically via EFS-Web selecting the document description "Petition for review and processing by the PCT Legal Office" or by mail addressed to Mail Stop PCT, Commissioner for Patents, Office of PCT Legal Administration, P.O. Box 1450, Alexandria, Virginia 22313-1450, with the contents of the letter marked to the attention of the Office of PCT Legal Administration.

Bryan Lin

Bryan Lin
PCT Legal Examiner
PCT Legal Office

Telephone: 571-272-3303
Facsimile: 571-273-0459

ATTACHMENT: Form PCT/RO/126

UNITED STATES PATENT AND TRADEMARK OFFICE

COMMISSIONER FOR PATENTS
UNITED STATES PATENT AND TRADEMARK OFFICE
P.O. BOX 1450
ALEXANDRIA, VA 22313-1450
www.uspto.gov

KENNETH H. JACK
ATTORNEY OF RECORD FOR APPLICANT
2121 W. MAPLE
WICHITA, KS 67213

MAILED
NOV 17 2010
PCT LEGAL ADMINISTRATION

In re Application of DUNBAR :
PCT Application No.: PCT/US2010/001448 :
Int. Filing Date: 17 May 2010 : DECISION
Priority Date Claimed: 18 May 2009 :
Attorney Docket No.: Dunbar :
For: ASSEMBLY FOR DOORWAY :
ILLUMINATION :

This is in response to applicant's correspondence filed 21 October 2010, which is being treated as a petition under 37 CFR 1.181. No petition fee is due.

BACKGROUND

On 17 May 2010, applicant filed international application papers with the United States Receiving Office (RO/US). The submission was assigned the above-identified International Application Number and International Filing Date.

On 19 July 2010, the RO/US mailed a Communication in Cases for which No Other Form is Applicable (Form PCT/RO/132), which stated that page 12 of the claims appeared to be missing.

On 17 August 2010, applicant submitted page 12 of the claims along with a petition to accord page 12 of the claims an original filing date of 17 May 2010.

On 07 September 2010, this Office mailed a decision dismissing the 17 August 2010 petition. Attached to the decision was a Notification Concerning Later Submitted Parts of an International Application (Form PCT/RO/126), which indicated that the International Filing Date had been corrected to 17 August 2010. Form PCT/RO/126 listed a mailing date of 27 August 2010.

On 01 October 2010, applicant filed a request that page 12 of the claims be disregarded in accordance with PCT Rule 20.5(e).

On 13 October 2010, the RO/US mailed a Communication in Cases for which No Other Form is Applicable (Form PCT/RO/132), which stated that applicant's request under PCT Rule 20.5(e) was not timely filed.

On 21 October 2010, applicant filed the present petition under 37 CFR 1.181.

DISCUSSION

A review of the application file reveals that Form PCT/RO/126 was attached to the decision mailed on 07 September 2010 and not separately mailed. The affidavit of Kenneth Jack confirms that Form PCT/RO/126 was received together with the decision. Therefore, the true mailing date of Form PCT/RO/126 was 07 September 2010, and applicant's request that page 12 of the claims be disregarded was filed within the time limit set forth in PCT Rule 20.5(e).

CONCLUSION

For the reasons above, the petition under 37 CFR 1.181 is GRANTED.

The Notification of the International Application Number and of the International Filing Date (Form PCT/RO/105), the Invitation to Correct Priority Claim and/or Notification of Possibility to Request Restoration of the Right of Priority (Form PCT/RO/110), and the Communication in Cases for which No Other Form is Applicable (Form PCT/RO/132) mailed on 13 October 2010 are hereby VACATED.

A copy of this decision is being forwarded to the International Bureau.

Bryan Lin

Bryan Lin
PCT Legal Examiner
PCT Legal Office

Telephone: 571-272-3303
Facsimile: 571-273-0459

ATTACHMENT: Notification Concerning Later Submitted Parts of an International Application (Form PCT/RO/126)

cc: International Bureau of WIPO
P.O. Box 18
1211 Geneva 20
Switzerland

23 SEP 2010

UNITED STATES PATENT AND TRADEMARK OFFICE

Commissioner for Patents
United States Patent and Trademark Office
P.O. Box 1450
Alexandria, VA 22313-1450
www.uspto.gov

Benita J. Rohm
Rohm & Monsanto, PLC
12 Rathbone Place
Grosse Pointe, Michigan 48230

In re Application of :
JURANITCH, James C. :
PCT No.:PCT/US2010/001930 :
Int. Filing Date: 02 July 2010 : DECISION ON PETITION
Priority Date: 01 July 2009 : UNDER 37 CFR 1.10(c)
Attorney Docket No.: RM.JJF : and 37 CFR 1.10(d)
For: HIGH ENERGY POWER PLANT FUEL, AND CO OR C2O SEQUESTERING PROCESS :

This decision is issued in response to applicant's "Petition under 37 CFR 1.10(c) and (d)" filed 09 August 2010 to correct the international filing date from 02 July 2010 to 01 July 2010. No petition fee is required.

BACKGROUND

The United States Receiving Office accorded an international filing date of 02 July 2010 to the above-identified international application.

On 02 August 2010, the United States Receiving Office ("RO/US") mailed a "Notification Of The International Application Number And Of The International Filing Date" (Form PCT/RO/105) indicating that the international filing date for this application was 02 July 2010.

On 09 August 2010, the present petition considered herein. The petition asserts that the "Express Mail" envelope containing the present application materials were deposited with the USPS as "Express Mail" on 01 July 2010, and that the proper filing date for this application is therefore 01 July 2010.

DISCUSSION

Pursuant to 37 CFR 1.10(a), materials filed with the USPTO by "Express Mail" are considered received in the USPTO as of the "date in" listed on the "Express Mail" label. As noted in 37 CFR 1.10(b) (emphasis added):

> Correspondence should be deposited directly with an employee of the USPS to ensure that the person depositing the correspondence

> receives a legible copy of the "Express Mail" mailing label with the "date in" clearly marked. **Persons dealing indirectly with employees of the USPS (such as by deposit in an "Express Mail" drop box) do so at the risk of not receiving a copy of the "Express Mail" mailing label with the desired "date in" clearly marked.** The paper(s) or fee(s) that constitute the correspondence should also include the "Express Mail" mailing label number thereon.

Here, the international filing date assigned to the application by the RO/US is 02 July 2010; this date was presumably taken from the "date in" listed on the "Express Mail" package in which the application was submitted. Applicant asserts that the proper date is 01 July 2010. Because applicant has not included a copy of the "Express Mail" mailing label with the "date in" listed thereon, it is unclear whether applicants are arguing that: (1) the international filing date entered by the USPTO fails to correspond with the "date in" on the mailing label (which would require a petition under 37 CFR 1.10(c)); or (2) the USPS entered an incorrect "date in" on the "Express Mail" label (which would require a petition under 37 CFR 1.10(d)). As discussed below, regardless of which argument was intended, applicant has failed to submit a grantable petition.

A grantable petition under 37 CFR 1.10(c) requires that applicant promptly file a petition including: (1) evidence that the "Express Mail" label number was placed on the correspondence prior to mailing, and (2) a true copy of the "Express Mail" label showing the "date in." Applicants here have not provided a copy of the "Express Mail" mailing label with the "date in" listed thereon. Accordingly, applicant has failed to submit all the requirements for a grantable petition under 37 CFR 1.10(c).

A grantable petition under 37 CFR 1.10(d) must include:

> a showing which establishes, to the satisfaction of the Commissioner, that the requested filing date was the date the correspondence was deposited in "Express Mail Post Office to Addressee" service prior to the last scheduled pickup for that day. Any showing pursuant to this paragraph must be corroborated by evidence from the USPS or that came into being within one business day after deposit of the correspondence in the "Express Mail Post Office to Addressee" service of the USPS."

Applicant here has not provided any such evidence. Applicant has provided a statement from Rafael Monsanto describing the deposit of the "Express Mail" envelope with the USPS. This statement asserts that, at 10:38 pm on 01 July 2010, the "Express Mail" envelope was deposited at an Automated Postage Center (APC) at the main post office in Detroit Michigan." From this statement, it is not clear that the envelope was deposited at the USPS location "prior to the last scheduled pickup for that day," as required. Additionally, applicant has included a USPS sales receipt as evidence of "the day and time the application was mailed" but the receipt merely establishes proof of purchase of postage, not the date of deposit of the Express Mail package in question. Therefore, the

petition does not include sufficient corroborating evidence regarding the deposit of the "Express Mail" envelope.

Based on the above, applicant has not provided an adequate showing confirming that 30 January 2007 was the date the application was deposited with the USPS as "Express Mail" prior to the last scheduled pickup for that day. Applicant must provide such a showing, in the form required by 37 CFR 1.10(d) (i.e., with evidence from the USPS or that came into being within one business day of the deposit) before the final requirement of a grantable petition can be considered satisfied.

CONCLUSION

Applicant's petition under 1.10(c) and/or (d), requesting that the international application be accorded an international filing date of 01 July 2010 is **DISMISSED** without prejudice. The international filing date remains 02 July 2010.

Any reconsideration on the merits of this petition must be filed within **TWO (2) MONTHS** from the mail date of this decision. Any reconsideration request should include a cover letter entitled "Renewed Petition Under 37 CFR 1.10(c) and/or 1.10(d)" (as appropriate).

Any further correspondence with respect to this matter may be filed electronically via EFS-Web selecting the document description "Petition for review and processing by the PCT Legal Office" or by mail addressed to Mail Stop PCT, Commissioner for Patents, Office of PCT Legal Administration, P.O. Box 1450, Alexandria, Virginia 22313-1450, with the contents of the letter marked to the attention of the Office of PCT Legal Administration.

Anthony Smith
Attorney-Advisor
Office of PCT Legal Administration
Tel: (571) 272-3298
Fax: (571) 273-0459

UNITED STATES PATENT AND TRADEMARK OFFICE

Commissioner for Patents
United States Patent and Trademark Office
P.O. Box 1450
Alexandria, VA 22313-1450
www.uspto.gov

Benita J. Rohm
Rohm & Monsanto, PLC
12 Rathbone Place
Grosse Pointe, Michigan 48230

MAILED

MAR 18 2011

PCT LEGAL ADMINISTRATION

In re Application of
JURANITCH, James C.
PCT No.: PCT/US2010/001930
Int. Filing Date: 02 July 2010
Priority Date: 01 July 2009
Attorney Docket No.: RM.JJF
For: HIGH ENERGY POWER PLANT FUEL, AND CO OR C2O SEQUESTERING PROCESS

DECISION ON PETITION
UNDER 37 CFR 1.10

This decision is issued in response to the "Renewed Petition to Revive Pursuant to 37 CFR 1.10(c) or (d)," filed on 30 November 2010, requesting that the international filing date of 02 July 2010 be changed to 01 July 2010 for the above identified application.

BACKGROUND

In a decision from this Office on 23 September 2010, the petition filed on 09 August 2010 was dismissed because it did not satisfy all items under either 37 CFR §§1.10(c) or (d).

On 30 November 2010, a renewed petition was filed to this Office requesting that the application be accorded a filing date of 01 July 2010, which would be pursuant to the "Express Mail" provisions under either 37 CFR §§1.10(c) or (d).

DISCUSSION

Petitioner has still not complied with all the requirements of either 37 CFR §§1.10(c) or (d) as enumerated below.

37 CFR 1.10(c) provides:

Any person filing correspondence under this section that was received by the Office and delivered by the "Express Mail Post Office to Addressee" service of the USPS, who can show that there is a discrepancy between the filing date accorded by the Office to the correspondence and the date of deposit as shown by the "date-in" on the "Express Mail" mailing label or other official USPS notation, may petition the Commissioner to accord the

correspondence a filing date as of the "date-in" on the "Express Mail" mailing label or other official USPS notation, provided that:

(1) The petition is filed promptly after the person becomes aware that the Office has accorded, or will accord, a filing date other than the USPS deposit date;

(2) The number of the "Express Mail" mailing label was placed on the paper(s) or fee(s) that constitute the correspondence prior to the original mailing by "Express Mail;" and

(3) The petition includes a true copy of the "Express Mail" mailing label showing the "date-in," and of any other official notation by the USPS relied upon to show the date of deposit.

Petitioner has still not satisfied item (3) under 37 CFR 1.10(c).

Petitioner has still neither provided a true copy of the "Express Mail" mailing label showing a "date-in" of July 1, 2010 nor other official notation by the USPS to show a date of deposit of July 1, 2010. As stated in the previous decision, the USPS receipt provided only indicates proof of purchase of postage and not the date of deposit of the Express Mail package. Benita Rhom's further assertions on the renewed petition do not overcome the burden of proof required without some corroborating evidence from an official USPS notation showing that EG382773400US was indeed deposited on 01 July 2010. That is, some evidence from the USPS showing "Express Mail" label EG382773400US with a date of 01 July 2010 such as a USPS Track & Confirm or USPS stamp on the "Express Mail" label showing such a date. As a result, petitioner has not met the requirements under 37 CFR 1.10(c).

37 CFR 1.10(d) provides:

Where the "date in" on the Express Mail mailing label is believed to be in error, applicants may file a petition under 37 CFR 1.10(d) to have the correspondence accorded a filing date as of the date of the correspondence is shown to have been deposited with the USPS. The requirements under 37 CFR 1.10(d) are:

> (1) The petition is filed promptly after the person becomes aware that the Office has accorded, or will accord, a filing date based upon an incorrect entry by the USPS;
>
> (2) The number of the "Express Mail" mailing label was placed on the paper (s) or fee(s) that constitute the correspondence prior to the original mailing by "Express Mail"; and
>
> (3) The petition includes a showing which establishes, to the satisfaction of the Commissioner, that the requested filing date was the date the correspondence was deposited in the "Express Mail Post Office to Addressee" service prior to the last scheduled pickup for that day. Any showing pursuant to this paragraph must be corroborated by evidence from the USPS or that came into being after deposit and within one

> business day of the deposit of the correspondence in the "Express Mail Post Office to Addressee" service of the USPS.

Petitioner has still not satisfied item (3) under 37 CFR 1.10(d).

The additional statements of Benita J. Rohm and Raphael A. Monsanto are insufficient to satisfy the requirements of 37 CFR 1.10(d)(3) without corroborating evidence from USPS or that came into being after deposit and within one business day of the deposit of the correspondence in the "Express Mail Post Office to Addressee" service of the USPS.

These statements from Benita J. Rohm and Raphael A. Monsanto summarize the steps they took to mail the package at the main post office located on 1401 W. Fort Street. Specifically, Mr. Monsanto indicates how a USPS manager assisted him in the use of the Automated Postage Center (APC) and that the USPS official had custody of the package before the APC was operated, and Mr. Monsanto never again had custody or control over the package. As a result, he reasonable expected that the Express Mail label would be filled correctly or that the APS receipt would constitute proof of receipt.

The process of mailing the package by Benita J. Rohm and Raphael A. Monsanto appear to lack due care as they did not follow the procedures set forth in filing a correspondence by "Express Mail," but now seek relief by such procedures.

The MPEP 513(II) is on point:

> 37 CFR 1.10(b) further provides that correspondence should be deposited directly with an employee of the USPS to ensure that the person depositing the correspondence receives a legible copy of the "Express Mail" mailing label with the "date-in" clearly marked, and that persons dealing indirectly with the employees of the USPS (such as by depositing correspondence in an "Express Mail" drop box) do so at the risk of not receiving a copy of the "Express Mail" mailing label with the desired "date-in" clearly marked. On petition, the failure to obtain an "Express Mail" receipt with the "date-in" clearly marked may be considered an omission that could have been avoided by the exercise of due care, as discussed below. While the Office strongly urges direct deposit of "Express Mail" correspondence in order to obtain a legible copy of the "Express Mail" mailing label, parties are not precluded from using "Express Mail" drop boxes, <u>but do so at their own risk</u>.

In addition, section 513 is specific as the proof required under 37 CFR 1.10(d), which has not been satisfied by petitioner.

MPEP 514(VI):

> The showing under 37 CFR 1.10(d) must be corroborated by (1) evidence from the USPS, or (2) evidence that came into being after deposit and within one business day of the deposit of the correspondence as "Express Mail." Evidence from the USPS may be the "Express Mail" Corporate Account Mailing Statement. Evidence that came into being within one day after the deposit of the correspondence as "Express Mail" may be in the form of a log book which

contains information such as the "Express Mail" number; the application number, attorney docket number or other such file identification number; the place, date and time of deposit; the time of the last scheduled pick-up for that date and place of deposit; the depositor's initials or signature; and the date and time of entry in the log.

Petitioner has included additional statements from the employees of the law firm. However, petitioner failed to provide any corroborating evidence from the USPS, such as a statement from a USPS manager, or some other evidence that came into being after deposit and within one business day of the deposit of the Express Mail correspondence.

Accordingly, petitioner has not adequately shown that the correspondence was accepted at the USPS Office at 1401 W. Fort Street for "Express Mail" mailing on 01 July 2010.

For the above reasons, it would not be appropriate to grant the petition under 37 CFR 1.10(d) at this time.

CONCLUSION

For reasons above, the petition under 37 CFR 1.10(c) and/or (d) is DISMISSED, without prejudice.

Any reconsideration on the merits of this petition must be filed within TWO (2) MONTHS from the mail date of this decision. Any reconsideration request should include a cover letter entitled "Renewed Petition Under 37 CFR 1.10(c) and/or 1.10(d)" (as appropriate).

Any further correspondence with respect to this matter may be filed electronically via EFS-Web selecting the document description "Petition for review and processing by the PCT Legal Office" or by mail addressed to Mail Stop PCT, Commissioner for Patents, Office of PCT Legal Administration, P.O. Box 1450, Alexandria, Virginia 22313-1450, with the contents of the letter marked to the attention of the Office of PCT Legal Administration.

Anthony Smith
Attorney-Advisor
Office of PCT Legal Administration
Tel: (571) 272-3298
Fax: (571) 273-0459

UNITED STATES PATENT and TRADEMARK OFFICE

COMMISSIONER FOR PATENTS
UNITED STATES PATENT AND TRADEMARK OFFICE
P.O BOX 1450
ALEXANDRIA, VA 22313-1450
www.uspto.gov

BENITA J. ROHM
ROHM & MONSANTO, PLC
12 RATHBONE PLACE
GROSSE POINTE MI MICHIGAN 48230

MAILED
NOV 02 2011
PCT LEGAL ADMINISTRATION

In re Application of	:	DECISION ON
JURANITCH et al	:	
PCT No.: PCT/US2010/001930	:	
Int. Filing Date: 02 July 2010	:	
Priority Date: 01 July 2009	:	RENEWED PETITION
Attorney's Docket No.: RM.JJF	:	
For: HIGH ENERGY POWER PLANT FUEL, AND	:	
CO OR C2O SEQUESTERING PROCESS	:	UNDER 37 CFR 1.10 (c) & (d)

This decision is in response to the "SECOND RENEWED PETITION TO REVIVE PURSUANT TO 37 CFR 1.10(c) or (d)," filed on 23 May 2011, requesting that the international filing date of 02 July 2010 be changed to 01 July 2010 for the above identified application.

BACKGROUND

In a decision from this Office on 15 March 2011 the petition filed on 03 December 2010 was dismissed because it did not satisfy all items under either 37 CFR §§1.10(c) or (d).

On 23 May 2011, a renewed petition was filed to this Office requesting that the application be accorded a filing date of 01 July 2010, which would be pursuant to the "Express Mail" provisions under either 37 CFR §§1.10(c) or (d).

DISCUSSION

The statutory authority for the granting of a filing date based on the date of deposit for correspondence sent by "Express Mail" and received by the Office is found in 35 U.S.C. § 21(a). The specific rule for obtaining a filing date as of the date of deposit in "Express Mail" (rather than the date of receipt at the Office) is 37 CFR 1.10.

The text of 35 U.S.C. *§* 21 *(Filing date and day for taking action)* states that:

(a)The Director may by rule prescribe that any paper or fee required to be filed in the Patent and Trademark Office will be considered filed in the Office on the date on which it was deposited with the United States Postal Service or would have been deposited with the United States Postal Service but for postal service interruptions or emergencies designated by the Director.

37 CFR 1.10(c) provides:

Any person filing correspondence under this section that was received by the Office and delivered by the "Express Mail Post Office to Addressee" service of the USPS, who can show that there is a discrepancy between the filing date accorded by the Office to the correspondence and the date of deposit as shown by the "date-in" on the "Express Mail" mailing label or other official USPS notation, may petition the Commissioner to accord the correspondence a filing date as of the "date-in" on the "Express Mail" mailing label or other official USPS notation, provided that:

(1) The petition is filed promptly after the person becomes aware that the Office has accorded, or will accord, a filing date other than the USPS deposit date;

(2) The number of the "Express Mail" mailing label was placed on the paper(s) or fee(s) that constitute the correspondence prior to the original mailing by "Express Mail;" and

(3) The petition includes a true copy of the "Express Mail" mailing label showing the "date-in," and of any other official notation by the USPS relied upon to show the date of deposit.

Petitioner second renewed petition has still not complied with the statute and the specific requirements of either 37 CFR §§1.10(c)(3) or (d)(3) as petitioner has not proffered adequate evidence that the application was deposited on July 1, 2010 with the USPS via the Express Mail provisions as enumerated below.

In this instance, Petitioner has not complied with the requirement set forth in 37 CFR § 1.10(c)(3) above. Petitioner has not provided a true copy of the "Express Mail" mailing label showing a "date-in" of July 1, 2010 nor any other official notation by the USPS to show a date of deposit of July 1, 2010.

Petitioner states in his renewed petition that the receipt of July 01, 2010 by the Automated Postage Center (APC) is "another official notation by the USPS." Petitioner further states that Raphael A. Monsanto directly dealt with a postal service employee who accepted the packages on July 1, 2010 and by all outward appearances, delivered the packages directly into the regular mail stream on such date. He further states that, once Mr. Monsanto handed the package to the USPS manager, he never again had custody or control over the packages. Petitioner asserts that Mr. Monsanto did not deposit the correspondence into an Express Mail deposit box or any other form of drop box. Petitioner then asserts that the failure to fill out the Express Mail label with the appropriate notations is the result of error on the part of the USPS. The copy of the "Express Mail' mailing label provided for EG382773400US had the "date-in" section blank[1].

Petitioner's arguments are unpersuasive. The USPS receipt by the Automated Postage Center (APC) machine is a notation by the USPS that only indicates proof of purchase of postage for mailing a package based on weight and type of delivery service desired by a person. It does not specifically indicate the date of deposit of the Express Mail package. In this instance, the APC receipt indicates the purchase on 7/01/2010 at 10:41 pm but provides no indication of when the package was deposited for mailing.

---

[1] The "Express Mail" label was provided with the petition filed on 09 August 2010.

The responsibility that a package is properly deposited via the "Express Mail" provisions under 37 CFR §1.10 so as to ensure compliance with USPTO's requirements falls on Petitioner. In this instance, petitioner's handling of the express mailing of the application package appeared to lack due care in following the procedures set forth for correspondence mailed via "Express Mail," particularly of ensuring that petitioner receives a legible copy of the "Express Mail" mailing label with the "date-in" clearly marked. Petitioner's attention is directed to MPEP 513(II), which is clear on this point and states the following:

> 37 CFR 1.10(b) further provides that correspondence should be deposited directly with an employee of the USPS to ensure that the person depositing the correspondence receives a legible copy of the "Express Mail" mailing label with the "date-in" clearly marked, and that persons dealing indirectly with the employees of the USPS (such as by depositing correspondence in an "Express Mail" drop box) do so at the risk of not receiving a copy of the "Express Mail" mailing label with the desired "date-in" clearly marked. On petition, the failure to obtain an "Express Mail" receipt with the "date-in" clearly marked may be considered an omission that could have been avoided by the exercise of due care, as discussed below. While the Office strongly urges direct deposit of "Express Mail" correspondence in order to obtain a legible copy of the "Express Mail" mailing label, parties are not precluded from using "Express Mail" drop boxes, but do so at their own risk.

Thus, it was Petitioner's responsibility to ensure that the "Express Mail" label was properly filled out. Petitioner has not explained why he did not request that the "Express Mail" mailing label be filled out by the USPS employee, as stipulated by 37 CFR 1.10.

In further support of this second renewed petition, Petitioner has provided a copy of the USPS of the "Track & Confirm" sheet (Exhibit G p. 1/2) as "another official notation by the USPS." This document is also insufficient as evidence that the package was sent via Express Mail on July 01, 2010 because it shows a date of deposit of July 2, 2010. The "Track & Confirm" sheet indicates that the above application was processed through Sort Facility, July 2, 2010, 8:18 am, Detroit, MI 48242. This is the date that the USPS has on its record as the date for processing for "Express Mail" delivery of this package.

For the above reasons, it would not be appropriate to grant the petition under 37 CFR 1.10(c) at this time.

Petitioner also requests that the international filing date of the above identified application be changed to 01 July 2010 under the provisions of 37 CFR 1.10(d).

37 CFR 1.10(d) provides:

Where the "date in" on the Express Mail mailing label is believed to be in error, applicants may file a petition under 37 CFR 1.10(d) to have the correspondence accorded a filing date as of the date of the correspondence is shown to have been deposited with the USPS. The requirements under 37 CFR 1.10(d) are:

> (1) The petition is filed promptly after the person becomes aware that the Office has accorded, or will accord, a filing date based upon an incorrect entry by the USPS;

> (2) The number of the "Express Mail" mailing label was placed on the paper(s) or fee(s) that constitute the correspondence prior to the original mailing by "Express Mail"; and
>
> (3) The petition includes a showing which establishes, to the satisfaction of the Commissioner, that the requested filing date was the date the correspondence was deposited in the "Express Mail Post Office to Addressee" service prior to the last scheduled pickup for that day. Any showing pursuant to this paragraph must be corroborated by evidence from the USPS or that came into being after deposit and within one business day of the deposit of the correspondence in the "Express Mail Post Office to Addressee" service of the USPS.

Petitioner's second renewed petition does not comply with the requirements set forth in the statute and the specific requirements of 37 CFR §1.10(d)(3) Petitioner has not proffered an adequate showing to the satisfaction of the Commissioner, that the requested filing date of July 01, 2010 was the date the correspondence was deposited in the "Express Mail Post Office to Addressee" service prior to the last scheduled pickup for that day.

The showing required under 37 CFR 1.10(d)(3) is discussed in MEPE (VI), which states:

> The showing under 37 CFR 1.10(d) must be corroborated by (1) evidence from the USPS, or (2) evidence that came into being after deposit and within one business day of the deposit of the correspondence as "Express Mail." Evidence from the USPS may be the "Express Mail" Corporate Account Mailing Statement. Evidence that came into being within one day after the deposit of the correspondence as "Express Mail" may be in the form of a log book which contains information such as the "Express Mail" number; the application number, attorney docket number or other such file identification number; the place, date and time of deposit; the time of the last scheduled pick-up for that date and place of deposit; the depositor's initials or signature; and the date and time of entry in the log.

Petitioner states that the statements of the registered practitioners having personal knowledge of the alleged facts were disregarded. On the contrary, the statements were considered but were found insufficient without corroborating evidence from a USPS employee to satisfy the requirement of 37 CFR 1.10(d)(3). Although, Petitioner states how a USPS manager assisted him in the use of the APC machine and that the USPS official had custody of the package on July 01, 2010 and was not at any time manning the counter or situated behind the desk, Petitioner has still not corroborated these alleged facts with a statement by a USPS employee as required.

Petitioner offers banking statements (Exhibit C) and Mapquest (Exhibit F) as evidence under 37 CFR 1.10(d)(3) as evidence that came within one day after the deposit. However, this evidence is insufficient to show a deposit date to the USPS of July 01, 2010 as stipulated by MPEP 514(IV).

The log book proffered as evidence also fails to comply with the requirements set forth by MPEP 514(IV). This section is specific as to what is needed on the log book to create a prima facie case for the alleged date of July 01, 2010 as the date of deposit of the package via the "Express Mail" provisions under 37 CFR 1.10. It requires certain evidence that came into being within one day after the deposit of the correspondence via "Express Mail." The rule states that the evidence may be in the form of a log book which contains information such as the "Express Mail" number; the application number, attorney docket number or other such file identification number; the place, date and time of deposit; the time of the last scheduled pick-up for that date and place of deposit. It also requires the depositor's initials or signature; and the date and time of entry in the log.

The log provided (Exhibits D and E) is insufficient evidence because it did not come into being one day after the alleged day of deposit of July 01, 2010. The log lists an entry date of July 1, 2010, the date that petitioner alleges mailing the package via Express Mail. The log also lacks vital information required by this section of the MPEP such as the place, date and time of deposit. In addition, the log does not have the depositor's initials or signature.

For the above reasons, it would not be appropriate to grant the petition under 37 CFR 1.10(d) at this time.

CONCLUSION

For reasons above, the petition under 37 CFR 1.10(c) and/or (d) is **DISMISSED**, without prejudice.

If reconsideration on the merits of this petition is desired, a proper reply must be filed within TWO (2) MONTHS from the mail date of this decision. If reconsideration of the merits of the petition under 37 CFR 1.47(a) is desired, applicant. Any reconsideration request should include a cover letter entitled "Renewed Petition Under 37 CFR 1.10(c) and/or (d)." Extensions of time are available under 37 CFR 1.136(a).

Any further correspondence with respect to this matter may be filed electronically via EFS-Web selecting the document description "Petition for review and processing by the PCT Legal Office" or by mail addressed to Mail Stop PCT, Commissioner for Patents, Office of PCT Legal Administration, P.O. Box 1450, Alexandria, Virginia 22313-1450, with the contents of the letter marked to the attention of the Office of PCT Legal Administration.

Rafael Bacares
PCT Legal Examiner
PCT Legal Office
Telephone: (571) 272-3276
Facsimile: (571) 273-6459

UNITED STATES PATENT AND TRADEMARK OFFICE

Commissioner for Patents
United States Patent and Trademark Office
P.O. Box 1450
Alexandria, VA 22313-1450
www.uspto.gov

Benita J. Rohm
Rohm & Monsanto, PLC
12 Rathbone Place
Grosse Pointe, Michigan 48230

MAILED

OCT 15 2010

PCT LEGAL ADMINISTRATION

In re Application of :
JURANITCH, James C. :
PCT No.:PCT/US2010/001931 :
Int. Filing Date: 02 July 2010 : DECISION ON PETITION
Priority Date: 01 July 2009 : UNDER 37 CFR 1.10(c)
Attorney Docket No.: RM.JJF : and 37 CFR 1.10(d)
For: HIGH ENERGY POWER PLANT :
FUEL, AND CO OR C2O :
SEQUESTERING PROCESS

This decision is issued in response to applicant's "Petition under 37 CFR 1.10(c) and (d)" to correct the international filing date from 02 July 2010 to 01 July 2010. No petition fee is required.

BACKGROUND

The United States Receiving Office accorded an international filing date of 02 July 2010 to the above-identified international application.

On 26 July 2010, the United States Receiving Office ("RO/US") mailed a "Notification Of The International Application Number And Of The International Filing Date" (Form PCT/RO/105) indicating that the international filing date for this application was 02 July 2010.

On 09 August 2010, the present petition considered herein. The petition asserts that the "Express Mail" envelope containing the present application materials were deposited with the USPS as "Express Mail" on 01 July 2010, and that the proper filing date for this application is therefore 01 July 2010.

DISCUSSION

Pursuant to 37 CFR 1.10(a), materials filed with the USPTO by "Express Mail" are considered received in the USPTO as of the "date in" listed on the "Express Mail" label. As noted in 37 CFR 1.10(b) (emphasis added):

> Correspondence should be deposited directly with an employee of the USPS to ensure that the person depositing the correspondence receives a legible copy of the "Express Mail" mailing label with the "date in" clearly marked. Persons dealing indirectly with employees of the USPS (such as by deposit in an "Express Mail" drop box) do so at the risk of not receiving a copy of the "Express Mail" mailing label with the desired "date in" clearly marked. The paper(s) or fee(s) that constitute the correspondence should also include the "Express Mail" mailing label number thereon.

Here, the international filing date assigned to the application by the RO/US is 02 July 2010; this date was presumably taken from the "date in" listed on the "Express Mail" package in which the application was submitted. Applicant asserts that the proper date is 01 July 2010. Because applicant has not included a copy of the "Express Mail" mailing label with the "date in" listed thereon, it is unclear whether applicants are arguing that: (1) the international filing date entered by the USPTO fails to correspond with the "date in" on the mailing label (which would require a petition under 37 CFR 1.10(c)); or (2) the USPS entered an incorrect "date in" on the "Express Mail" label (which would require a petition under 37 CFR 1.10(d)). As discussed below, regardless of which argument was intended, applicant has failed to submit a grantable petition.

A grantable petition under 37 CFR 1.10(c) requires that applicant promptly file a petition including: (1) evidence that the "Express Mail" label number was placed on the correspondence prior to mailing, and (2) a true copy of the "Express Mail" label showing the "date in." Applicants here have not provided a copy of the "Express Mail" mailing label with the "date in" listed thereon. Accordingly, applicant has failed to submit all the requirements for a grantable petition under 37 CFR 1.10(c).

A grantable petition under 37 CFR 1.10(d) must include:

> a showing which establishes, to the satisfaction of the Commissioner, that the requested filing date was the date the correspondence was deposited in "Express Mail Post Office to Addressee" service prior to the last scheduled pickup for that day. Any showing pursuant to this paragraph must be corroborated by evidence from the USPS or that came into being within one business day after deposit of the correspondence in the "Express Mail Post Office to Addressee" service of the USPS."

Applicant here has not provided any such evidence. Applicant has provided a statement from Rafael Monsanto describing the deposit of the "Express Mail" envelope with the USPS. This statement asserts that, at 10:38 pm on 01 July 2010, the "Express Mail" envelope was deposited at an Automated Postage Center (APC) at the main post office in Detroit Michigan." From this statement, it is not clear that the envelope was deposited at the USPS location "prior to the last scheduled pickup for that day," as required. Additionally, applicant has included a USPS sales receipt as evidence of "the day and time

the application was mailed" but the receipt merely establishes proof of purchase of postage, not the date of deposit of the Express Mail package in question. Therefore, the petition does not include sufficient corroborating evidence regarding the deposit of the "Express Mail" envelope.

Based on the above, applicant has not provided an adequate showing confirming that 01 July 2010 was the date the application was deposited with the USPS as "Express Mail" prior to the last scheduled pickup for that day. Applicant must provide such a showing, in the form required by 37 CFR 1.10(d) (i.e., with evidence from the USPS or that came into being within one business day of the deposit) before the final requirement of a grantable petition can be considered satisfied.

CONCLUSION

Applicant's petition under 1.10(c) and/or (d), requesting that the international application be accorded an international filing date of 01 July 2010 is DISMISSED without prejudice. The international filing date remains 02 July 2010.

Any reconsideration on the merits of this petition must be filed within TWO (2) MONTHS from the mail date of this decision. Any reconsideration request should include a cover letter entitled "Renewed Petition Under 37 CFR 1.10(c) and/or 1.10(d)" (as appropriate).

Any further correspondence with respect to this matter may be filed electronically via EFS-Web selecting the document description "Petition for review and processing by the PCT Legal Office" or by mail addressed to Mail Stop PCT, Commissioner for Patents, Office of PCT Legal Administration, P.O. Box 1450, Alexandria, Virginia 22313-1450, with the contents of the letter marked to the attention of the Office of PCT Legal Administration.

Rafael Bacares
Legal Examiner
Office of PCT Legal Administration
Tel: (571) 272-3298
Fax: (571) 273-0459

UNITED STATES PATENT and TRADEMARK OFFICE

COMMISSIONER FOR PATENTS
UNITED STATES PATENT AND TRADEMARK OFFICE
P.O BOX 1450
ALEXANDRIA, VA 22313-1450
www.uspto.gov

BENITA J. ROHM
ROHM & MONSANTO, PLC
12 RATHBONE PLACE
GROSSE POINTE MI MICHIGAN 48230

MAILED
MAR 15 2011
PCT LEGAL ADMINISTRATION

In re Application of	:	DECISION ON
JURANITCH et al	:	
PCT No.: PCT/US2010/001931	:	
Int. Filing Date: 02 July 2010	:	
Priority Date: 01 July 2009	:	RENEWED PETITION
Attorney's Docket No.: RM.JJF	:	
For: HIGH ENERGY POWER PLANT FUEL, AND	:	
CO OR C2O SEQUESTERING PROCESS	:	UNDER 37 CFR 1.10 (d)

This decision is in response to the "RENEWED PETITION TO REVIVE PURSUANT TO 37 CFR 1.10(c) or (d)," filed on 03 December 2010, requesting that the international filing date of 02 July 2010 be changed to 01 July 2010 for the above identified application.

BACKGROUND

In a decision from this Office on 15 October 2010, the petition filed on 09 August 2010 was dismissed because it did not satisfy all items under either 37 CFR §§1.10(c) or (d).

On 03 December 2010, a renewed petition was filed to this Office requesting that the application be accorded a filing date of 01 July 2010, which would be pursuant to the "Express Mail" provisions under either 37 CFR §§1.10(c) or (d).

DISCUSSION

Petitioner has still not complied with all the requirements of either 37 CFR §§1.10(c) or (d) as enumerated below.

37 CFR 1.10(c) provides:

Any person filing correspondence under this section that was received by the Office and delivered by the "Express Mail Post Office to Addressee" service of the USPS, who can show that there is a discrepancy between the filing date accorded by the Office to the correspondence and the date of deposit as shown by the "date-in" on the "Express Mail" mailing label or other official USPS notation, may petition the Commissioner to accord the correspondence a filing date as of the "date-in" on the "Express Mail" mailing label or other official USPS notation, provided that:

(1) The petition is filed promptly after the person becomes aware that the Office has accorded, or will accord, a filing date other than the USPS deposit date;

(2) The number of the "Express Mail" mailing label was placed on the paper(s) or fee(s) that constitute the correspondence prior to the original mailing by "Express Mail;" and

(3) The petition includes a true copy of the "Express Mail" mailing label showing the "date-in," and of any other official notation by the USPS relied upon to show the date of deposit.

Petitioner has still not satisfied item (3) under 37 CFR 1.10(c).

Petitioner has still neither provided a true copy of the "Express Mail" mailing label showing a "date-in" of July 1, 2010 nor other official notation by the USPS to show a date of deposit of July 1, 2010. As stated in the previous decision, the USPS receipt provided only indicates proof or purchase of postage and not date of deposit of the Express Mail package. Benita Rohm's further assertions on the renewed petition do not overcome the burden of proof required without some corroborating from an official USPS notation showing that EG382773395US was indeed deposited on 01 July 2010. That is, some evidence from the USPS showing "Express Mail" label EG3827733895US with a date of 01 July 2010 such as a USPS Track & Confirm or USPS stamp on the "Express Mail" label showing such a date. As a result, petitioner has not met the requirements under 37 CFR 1.10(c).

37 CFR 1.10(d) provides:

Where the "date in" on the Express Mail mailing label is believed to be in error, applicants may file a petition under 37 CFR 1.10(d) to have the correspondence accorded a filing date as of the date of the correspondence is shown to have been deposited with the USPS. The requirements under 37 CFR 1.10(d) are:

> (1) The petition is filed promptly after the person becomes aware that the Office has accorded, or will accord, a filing date based upon an incorrect entry by the USPS;
>
> (2) The number of the "Express Mail" mailing label was placed on the paper(s) or fee(s) that constitute the correspondence prior to the original mailing by "Express Mail"; and
>
> (3) The petition includes a showing which establishes, to the satisfaction of the Commissioner, that the requested filing date was the date the correspondence was deposited in the "Express Mail Post Office to Addressee" service prior to the last scheduled pickup for that day. Any showing pursuant to this paragraph must be corroborated by evidence from the USPS or that came into being after deposit and within one business day of the deposit of the correspondence in the "Express Mail Post Office to Addressee" service of the USPS.

Petitioner has still not satisfied item (3) under 37 CFR 1.10(d).

The additional statements of Benita J. Rohm and Raphael A. Monsanto are insufficient to satisfy the requirements of 37 CFR 1.10(d)(3) without corroborating from USPS or that came into being after deposit and within one business day of the deposit of the correspondence in the "Express Mail Post Office to Addressee" service of the USPS.

These statements from Benita J. Rohm and Raphael A. Monsanto summarize the steps they took to mail the package at the main post office located on 1401 W. Fort Street. Specifically, Mr. Monsanto indicates how a USPS manager assisted him in the use of the APC and that the USPS official had custody of the package before the APC was operated, and Mr. Monsanto never again had custody or control over the package. As a result, he reasonable expected that the Express Mail label would be filled correctly or that the APS receipt would constitute proof of receipt.

The process of mailing the package by Rohm and Monsanto appear to lack due care as they did not follow the procedures set forth filing a correspondence by "Express Mail" but now seek relief by such procedures.

The MPEP 513(II) is on point:

> 37 CFR 1.10(b) further provides that correspondence should be deposited directly with an employee of the USPS to ensure that the person depositing the correspondence receives a legible copy of the "Express Mail" mailing label with the "date-in" clearly marked, and that persons dealing indirectly with the employees of the USPS (such as by depositing correspondence in an "Express Mail" drop box) do so at the risk of not receiving a copy of the "Express Mail" mailing label with the desired "date-in" clearly marked. On petition, the failure to obtain an "Express Mail" receipt with the "date-in" clearly marked may be considered an omission that could have been avoided by the exercise of due care, as discussed below. While the Office strongly urges direct deposit of "Express Mail" correspondence in order to obtain a legible copy of the "Express Mail" mailing label, parties are not precluded from using "Express Mail" drop boxes, but do so at their own risk.

In addition, section 513 is specific as the proof required under 37 CFR 1.10(d), which has not been satisfied by petitioner.

MPEP 514(VI):

> The showing under 37 CFR 1.10(d) must be corroborated by (1) evidence from the USPS, or (2) evidence that came into being after deposit and within one business day of the deposit of the correspondence as "Express Mail." Evidence from the USPS may be the "Express Mail" Corporate Account Mailing Statement. Evidence that came into being within one day after the deposit of the correspondence as "Express Mail" may be in the form of a log book which contains information such as the "Express Mail" number; the application number, attorney docket number or other such file identification number; the place, date and time of deposit; the time of the last scheduled pick-up for that date and place of deposit; the depositor's initials or signature; and the date and time of entry in the log.

Petitioner has included additional statements from the employees of the law firm. However, petitioner failed to provide any corroborating evidence from the USPS, such as a statement from the USPS manager, or some other evidence that came into being after the deposit and within one business day of the deposit of the Express Mail correspondence such as a log book as described above.

Accordingly, petitioner has not adequately shown that the correspondence was accepted at the USPS Office at 1401 W. Fort Street for "Express Mail" mailing on 01 July 2010.

For the above reasons, it would not be appropriate to grant the petition under 37 CFR 1.10(d) at this time.

CONCLUSION

For reasons above, the petition under 37 CFR 1.10(c) and/or (d) is **DISMISSED**, without prejudice.

If reconsideration on the merits of this petition is desired, a proper reply must be filed within TWO (2) MONTHS from the mail date of this decision. If reconsideration of the merits of the petition under 37 CFR 1.47(a) is desired, applicant. Any reconsideration request should include a cover letter entitled "Renewed Petition Under 37 CFR 1.10(c) and/or (d)." Extensions of time are available under 37 CFR 1.136(a).

Any further correspondence with respect to this matter may be filed electronically via EFS-Web selecting the document description "Petition for review and processing by the PCT Legal Office" or by mail addressed to Mail Stop PCT, Commissioner for Patents, Office of PCT Legal Administration, P.O. Box 1450, Alexandria, Virginia 22313-1450, with the contents of the letter marked to the attention of the Office of PCT Legal Administration.

Rafael Bacares
PCT Legal Examiner
PCT Legal Office
Telephone: (571) 272-3276
Facsimile: (571) 273-6459

UNITED STATES PATENT and TRADEMARK OFFICE

COMMISSIONER FOR PATENTS
UNITED STATES PATENT AND TRADEMARK OFFICE
P.O BOX 1450
ALEXANDRIA, VA 22313-1450
www.uspto.gov

BENITA J. ROHM
ROHM & MONSANTO, PLC
12 RATHBONE PLACE
GROSSE POINTE MI MICHIGAN 48230

MAILED
NOV 02 2011

In re Application of	:	DECISION ON PCT LEGAL ADMINISTRATION
JURANITCH et al	:	
PCT No.: PCT/US2010/001931	:	
Int. Filing Date: 02 July 2010	:	
Priority Date: 01 July 2009	:	RENEWED PETITION
Attorney's Docket No.: RM.JJG	:	
For: LOW PRESSURE REACTOR	:	
ENHANCEMENT SYSTEM	:	UNDER 37 CFR 1.10 (c) & (d)

This decision is in response to the "SECOND RENEWED PETITION TO REVIVE PURSUANT TO 37 CFR 1.10(c) or (d)," filed on 23 May 2011, requesting that the international filing date of 02 July 2010 be changed to 01 July 2010 for the above identified application.

BACKGROUND

In a decision from this Office on 15 March 2011 the petition filed on 03 December 2010 was dismissed because it did not satisfy all items under either 37 CFR §§1.10(c) or (d).

On 23 May 2011, a renewed petition was filed to this Office requesting that the application be accorded a filing date of 01 July 2010, which would be pursuant to the "Express Mail" provisions under either 37 CFR §§1.10(c) or (d).

DISCUSSION

The statutory authority for the granting of a filing date based on the date of deposit for correspondence sent by "Express Mail" and received by the Office is found in 35 U.S.C. § 21(a). The specific rule for obtaining a filing date as of the date of deposit in "Express Mail" (rather than the date of receipt at the Office) is 37 CFR 1.10.

The text of 35 U.S.C. *§* 21 *(Filing date and day for taking action)* states that:

(a)The Director may by rule prescribe that any paper or fee required to be filed in the Patent and Trademark Office will be considered filed in the Office on the date on which it was deposited with the United States Postal Service or would have been deposited with the United States Postal Service but for postal service interruptions or emergencies designated by the Director.

37 CFR 1.10(c) provides:

Any person filing correspondence under this section that was received by the Office and delivered by the "Express Mail Post Office to Addressee" service of the USPS, who can show that there is a discrepancy between the filing date accorded by the Office to the correspondence and the date of deposit as shown by the "date-in" on the "Express Mail" mailing label or other official USPS notation, may petition the Commissioner to accord the correspondence a filing date as of the "date-in" on the "Express Mail" mailing label or other official USPS notation, provided that:

(1) The petition is filed promptly after the person becomes aware that the Office has accorded, or will accord, a filing date other than the USPS deposit date;

(2) The number of the "Express Mail" mailing label was placed on the paper(s) or fee(s) that constitute the correspondence prior to the original mailing by "Express Mail;" and

(3) The petition includes a true copy of the "Express Mail" mailing label showing the "date-in," and of any other official notation by the USPS relied upon to show the date of deposit.

Petitioner second renewed petition has still not complied with the statute and the specific requirements of either 37 CFR §§1.10(c)(3) or (d)(3) as petitioner has not proffered adequate evidence that the application was deposited on July 1, 2010 with the USPS via the Express Mail provisions as enumerated below.

In this instance, Petitioner has not complied with the requirement set forth in 37 CFR § 1.10(c)(3) above. Petitioner has not provided a true copy of the "Express Mail" mailing label showing a "date-in" of July 1, 2010 nor any other official notation by the USPS to show a date of deposit of July 1, 2010.

Petitioner states in his renewed petition that the receipt of July 01, 2010 by the Automated Postage Center (APC) is "another official notation by the USPS." Petitioner further states that Raphael A. Monsanto directly dealt with a postal service employee who accepted the packages on July 1, 2010 and by all outward appearances, delivered the packages directly into the regular mail stream on such date. He further states that, once Mr. Monsanto handed the package to the USPS manager, he never again had custody or control over the packages. Petitioner asserts that Mr. Monsanto did not deposit the correspondence into an Express Mail deposit box or any other form of drop box. Petitioner then asserts that the failure to fill out the Express Mail label with the appropriate notations is the result of error on the part of the USPS. The copy of the "Express Mail' mailing label provided for EG382773395US had the "date-in" section blank[1].

Petitioner's arguments are unpersuasive. The USPS receipt by the Automated Postage Center (APC) machine is a notation by the USPS that only indicates proof of purchase of postage for mailing a package based on weight and type of delivery service desired by a person. It does not specifically indicate the date of deposit of the Express Mail package. In this instance, the APC receipt indicates the purchase on 7/01/2010 at 10:38 pm but provides no indication of when the package was deposited for mailing.

---

[1] The "Express Mail" label was provided with the petition filed on 09 August 2010.

The responsibility that a package is properly deposited via the "Express Mail" provisions under 37 CFR §1.10 so as to ensure compliance with USPTO's requirements falls on Petitioner. In this instance, petitioner's handling of the express mailing of the application package appeared to lack due care in following the procedures set forth for correspondence mailed via "Express Mail," particularly of ensuring that petitioner receives a legible copy of the "Express Mail" mailing label with the "date-in" clearly marked. Petitioner's attention is directed to MPEP 513(II), which is clear on this point and states the following:

> 37 CFR 1.10(b) further provides that correspondence should be deposited directly with an employee of the USPS to ensure that the person depositing the correspondence receives a legible copy of the "Express Mail" mailing label with the "date-in" clearly marked, and that persons dealing indirectly with the employees of the USPS (such as by depositing correspondence in an "Express Mail" drop box) do so at the risk of not receiving a copy of the "Express Mail" mailing label with the desired "date-in" clearly marked. On petition, the failure to obtain an "Express Mail" receipt with the "date-in" clearly marked may be considered an omission that could have been avoided by the exercise of due care, as discussed below. While the Office strongly urges direct deposit of "Express Mail" correspondence in order to obtain a legible copy of the "Express Mail" mailing label, parties are not precluded from using "Express Mail" drop boxes, but do so at their own risk.

Thus, it was Petitioner's responsibility to ensure that the "Express Mail" label was properly filled out. Petitioner has not explained why he did not request that the "Express Mail" mailing label be filled out by the USPS employee, as stipulated by 37 CFR 1.10.

In further support of this second renewed petition, Petitioner has provided a copy of the USPS of the "Track & Confirm" sheet (Exhibit G p. 2/2) as "another official notation by the USPS." This document is also insufficient as evidence that the package was sent via Express Mail on July 01, 2010 because it shows a date of deposit of July 2, 2010. The "Track & Confirm" sheet indicates that the above application was processed through Sort Facility, July 2, 2010, 10:32 am, Detroit, MI 48242. This is the date that the USPS has on its record as the date for processing for "Express Mail" delivery of this package.

For the above reasons, it would not be appropriate to grant the petition under 37 CFR 1.10(c) at this time.

Petitioner also requests that the international filing date of the above identified application be changed to 01 July 2010 under the provisions of 37 CFR 1.10(d).

37 CFR 1.10(d) provides:

Where the "date in" on the Express Mail mailing label is believed to be in error, applicants may file a petition under 37 CFR 1.10(d) to have the correspondence accorded a filing date as of the date of the correspondence is shown to have been deposited with the USPS. The requirements under 37 CFR 1.10(d) are:

> (1) The petition is filed promptly after the person becomes aware that the Office has accorded, or will accord, a filing date based upon an incorrect entry by the USPS;

> (2) The number of the "Express Mail" mailing label was placed on the paper(s) or fee(s) that constitute the correspondence prior to the original mailing by "Express Mail"; and
>
> (3) The petition includes a showing which establishes, to the satisfaction of the Commissioner, that the requested filing date was the date the correspondence was deposited in the "Express Mail Post Office to Addressee" service prior to the last scheduled pickup for that day. Any showing pursuant to this paragraph must be corroborated by evidence from the USPS or that came into being after deposit and within one business day of the deposit of the correspondence in the "Express Mail Post Office to Addressee" service of the USPS.

Petitioner's second renewed petition does not comply with the requirements set forth in the statute and the specific requirements of 37 CFR §1.10(d)(3) Petitioner has not proffered an adequate showing to the satisfaction of the Commissioner, that the requested filing date of July 01, 2010 was the date the correspondence was deposited in the "Express Mail Post Office to Addressee" service prior to the last scheduled pickup for that day.

The showing required under 37 CFR 1.10(d)(3) is discussed in MEPE (VI), which states:

> The showing under 37 CFR 1.10(d) must be corroborated by (1) evidence from the USPS, or (2) evidence that came into being after deposit and within one business day of the deposit of the correspondence as "Express Mail." Evidence from the USPS may be the "Express Mail" Corporate Account Mailing Statement. Evidence that came into being within one day after the deposit of the correspondence as "Express Mail" may be in the form of a log book which contains information such as the "Express Mail" number; the application number, attorney docket number or other such file identification number; the place, date and time of deposit; the time of the last scheduled pick-up for that date and place of deposit; the depositor's initials or signature; and the date and time of entry in the log.

Petitioner states that the statements of the registered practitioners having personal knowledge of the alleged facts were disregarded. On the contrary, the statements were considered but were found insufficient without corroborating evidence from a USPS employee to satisfy the requirement of 37 CFR 1.10(d)(3). Although, Petitioner states how a USPS manager assisted him in the use of the APC machine and that the USPS official had custody of the package on July 01, 2010 and was not at any time manning the counter or situated behind the desk, Petitioner has still not corroborated these alleged facts with a statement by a USPS employee as required.

Petitioner offers banking statements (Exhibit C) and Mapquest (Exhibit F) as evidence under 37 CFR1.10(d)(3) as evidence that came within one day after the deposit. However, this evidence is insufficient to show a deposit date to the USPS of July 01, 2010 as stipulated by MPEP 514(IV).

The log book proffered as evidence also fails to comply with the requirements set forth by MPEP 514(IV). This section is specific as to what is needed on the log book to create a prima facie case for the alleged date of July 01, 2010 as the date of deposit of the package via the "Express Mail" provisions under 37 CFR 1.10. It requires certain evidence that came into being within one day after the deposit of the correspondence via "Express Mail." The rule states that the evidence may be in the form of a log book which contains information such as the "Express Mail" number; the application number, attorney docket number or other such file identification number; the place, date and time of deposit; the time of the last scheduled pick-up for that date and place of deposit. It also requires the depositor's initials or signature; and the date and time of entry in the log.

The log provided (Exhibits D and E) is insufficient evidence because it did not come into being one day after the alleged day of deposit of July 01, 2010. The log lists an entry date of July 1, 2010, the date that petitioner alleges mailing the package via Express Mail. The log also lacks vital information required by this section of the MPEP such as the place, date and time of deposit. In addition, the log does not have the depositor's initials or signature.

For the above reasons, it would not be appropriate to grant the petition under 37 CFR 1.10(d) at this time.

CONCLUSION

For reasons above, the petition under 37 CFR 1.10(c) and/or (d) is **DISMISSED**, without prejudice.

If reconsideration on the merits of this petition is desired, a proper reply must be filed within TWO (2) MONTHS from the mail date of this decision. If reconsideration of the merits of the petition under 37 CFR 1.47(a) is desired, applicant. Any reconsideration request should include a cover letter entitled "Renewed Petition Under 37 CFR 1.10(c) and/or (d)." Extensions of time are available under 37 CFR 1.136(a).

Any further correspondence with respect to this matter may be filed electronically via EFS-Web selecting the document description "Petition for review and processing by the PCT Legal Office" or by mail addressed to Mail Stop PCT, Commissioner for Patents, Office of PCT Legal Administration, P.O. Box 1450, Alexandria, Virginia 22313-1450, with the contents of the letter marked to the attention of the Office of PCT Legal Administration.

Rafael Bacares
PCT Legal Examiner
PCT Legal Office
Telephone: (571) 272-3276
Facsimile: (571) 273-6459

UNITED STATES PATENT AND TRADEMARK OFFICE

Commissioner for Patents
United States Patent and Trademark Office
P.O. Box 1450
Alexandria, VA 22313-1450
www.uspto.gov

MAILED

JAN 18 2012

PCT LEGAL ADMINISTRATION

KEITH D. PARR
LOCKE. LORD, BISSELL & LIDDELL LLP
111 SOUTH WACKER DRIVE
CHICAGO IL ILLINOIS 60606

In re Application of:
PROJECTIONWORKS, INC.
PCT No.: PCT/US2010/002824
International Filing Date: 22 October 2010
Priority Date: 09 November 2009
Attorney's Docket No.: 1004065-0000
For: SYSTEMS AND METHODS FOR OPTICALLY PROJECTING THREE DIMENSIONAL TEXT, IMAGES AND/OR SYMBOLS ONTO THREE-DIMENSIONAL OBJECTS

DECISION ON PETITION UNDER 37 CFR 1.182

This decision is issued in response to the "PETITION UNDER 37 CFR §1.182 TO ACCEPT AN IDENTICAL PAPER FORM OF ELECTRONICALLY-FILED COMPUTER SOFTWARE CODE FOR AN INTERNATIONAL APPLICATION" filed on 26 January 2011. Applicant has paid the applicable petition fee.

BACKGROUND

On 22 October 2010, applicant initiated the present international application by filing, a PCT Request (Form PCT/RO/101) and accompanying materials. Box IX of the PCT Request identified the contents of the international application as follows: Request (11 pages); Description (160 pages); Claims (15 pages); Abstract (1 page); and drawings (23 pages) for a total of 210 pages, and the international application as filed included these itemized materials.

Applicant's 22 October 2010 submission also included a document entitled "Computer Program Listing Appendix For CD-R Compact Discs" accompanied by CD-R discs containing computer program text. The computer program materials contained on the CD-R discs were not itemized on the PCT Request as part of the international application and were not submitted in paper form.

On 03 December 2010, the United States Receiving Office (RO/US) mailed a "Communication In Cases For Which No Other Form Is Applicable" (Form PCT/RO/132) informing applicants that the materials on the CD-R discs would not be considered part of the international application because the filing of an element of a paper application in electronic form is not acceptable.

On 07 December 2010, the RO/US mailed the following: (1) "Notification Concerning Payment Of Prescribed Fees" (Form PCT/RO/102) indicating that $5,807 in fees were required and that applicant had paid all such required fees; (2) "Notification Of The International Application Number And Of The International Filing Date" (Form PCT/RO/105) identifying the international filing date as 22 October 2010; and (3) "Invitation To Correct Defects In The International Application" (Form PCT/RO/106) noting formality defects in the drawings filed with the international application.

On 17 December 2010, the United States Searching Authority (ISA/US) mailed an "Invitation To Furnish Nucleotide And/Or Amino Acid Sequence Listing And To Pay Where Applicable Late Furnishing Fee" (Form PCT/ISA/225) accompanied by a SCORE-CRF Problem Report.

On 15 January 2011, applicant filed a "Response To Invitation To Furnish Nucleotide And/Or Amino Acid Sequence Listing And To Pay, Where Applicable, Late Furnishing Fee" arguing that the computer program contained on the CD-R discs should properly be considered as part of the international application.

On 17 January 2011, applicant filed a "Supplemental Response To Invitation To Furnish Nucleotide And/Or Amino Acid Sequence Listing And To Pay, Where Applicable, Late Furnishing Fee." The submission included two CD-R discs that were identified as identical to those filed with the original application.

On 18 January 2011, applicant filed a "Response To Invitation To Correct Defects In The International Application."

On 26 January 2011, applicant filed the "Petition Under 37 CFR §1.182 To Accept An Identical Paper Form Of Electronically-Filed Computer Software Code For An International Patent Application" considered herein, accompanied by a paper copy of the computer program and $8,932 as the fee for inclusion of these additional pages in the international application.

DISCUSSION

The present petition under 37 CFR 1.182 requests that the accompanying 649 pages of computer code be accepted as part of the international application as filed on the international filing date. As noted above, a paper copy of these pages was not included with the international application as filed. Rather, applicants assert that the computer code was contained on two duplicate CD-R discs included with the filed international application and that the submission of the CD-R discs constitutes an acceptable filing of such materials.[1]

[1] It is noted that, while USPTO records confirm receipt of the CD-R discs on the international filing date, the discs are not present in the application file. However, based on applicant's statements in the present petition and the materials filed on 17 January 2011, the duplicate CD-R discs included with applicants' 17 January 2011 submission, which are present in the application file and do contain computer code, are accepted as identical to the CD-R discs filed by applicants on the international filing date. The Office is also relying on applicants' statements herein in concluding that that the 649 pages of computer code accompanying the present petition represent a paper copy of the code contained on these discs.

While 37 CFR 1.52(e) permits an applicant in a U.S. national application to submit a computer program on a CD-R disc, there is no comparable provision applicable to PCT applications. Because there is no provision in the PCT authorizing an applicant who files an international application in paper form to include as part of such application a computer program submitted solely on CD-R discs, the computer program materials filed by applicants exclusively on CD-R discs were not filed in a proper format.[2]

However, pursuant to section 703(e) of the PCT Administrative Instructions, the receiving Office has discretion to accept materials filed electronically, even if such materials are not filed in compliance with the receiving Office's applicable filing requirements. Under the circumstances present here, where the computer program listing was included with the original international application materials (albeit in an improper form) and where applicant has filed an appropriate petition, submitted the computer program materials in paper form, and paid the supplemental filing fee applicable to such additional pages, it is determined that the 649 pages of computer program included with the present petition are appropriately treated as part of the international application filed on 22 October 2010.

CONCLUSION

Applicant's petition under 37 CFR 1.182 is **GRANTED** to the following extent.

The 649 pages of computer code submitted with the petition in paper form (page numbers 200-848) are accepted as part of the international application with an international filing date of 22 October 2010.

The application is being referred to the RO/US for further processing in accordance with this decision.

/RichardMRoss/

Richard M. Ross
Attorney Advisor
Office of PCT Legal Administration
Telephone: (571) 272-3296

[2] It is noted that the computer program materials were also not properly incorporated by reference into the present application as applicants failed to timely confirm incorporation by reference of such materials in compliance with PCT Rule 20.6.

UNITED STATES PATENT AND TRADEMARK OFFICE

MAILED

APR 28 2011

PCT LEGAL ADMINISTRATION

Commissioner for Patents
United States Patent and Trademark Office
P.O. Box 1450
Alexandria, VA 22313-1450
www.uspto.gov

William C. Gehris
Davidson, Davidson & Kappel, LLC
485 Seventh Avenue, 14th Floor
New York, NY 10018

In re Application of: TANDENT VISION SCIENCE, INC.	:	PETITION
PCT Application No.: PCT/US2010/003221	:	
International Filing Date: 21 December 2010	:	
Priority Date: 11 January 2010	:	UNDER
Attorney's Docket No.: 590.1035PCT	:	
For: IMAGE SEGREGATION SYSTEM WITH METHOD	:	
FOR HANDLING TEXTURES	:	37 CFR 1.181

This decision is in response to applicants' "COMMUNICATION RE APPLICANT'S NAME" filed 05 April 2011, which has been treated as a petition under 37 C.F.R. 1.181. No petition fee is required.

BACKGROUND

On 04 March 2011, the United States International Searching Authority (ISA/US) issued a Notification of Transmittal of the International Search Report and the Written Opinion of the International Searching Authority, or the Declaration (form PCT/ISA/220), International Search Report (form PCT/ISA/210), and Written Opinion of the International Searching Authority (form PCT/ISA/237).

On 05 April 2011, applicants filed the present petition requesting that the International Search Report and Written Opinion be issued with "Tandent Vision Science, Inc." as the correct name of the applicant.

DISCUSSION

A review of the file reveals that the name of the applicant on the forms PCT/ISA/220, PCT/ISA/210, and PCT/ISA/237 was incorrectly spelled as "Tradent Vision Science, Inc."

CONCLUSION

For the reason given above, the applicants' petition under 37 CFR 1.181 is **GRANTED**.

Corrected Notification of Transmittal of the International Search Report and the Written Opinion of the International Searching Authority, or the Declaration (form PCT/ISA/220), International Search Report (form PCT/ISA/210), and Written Opinion of the International Searching Authority (form PCT/ISA/237) are attached to this decision. A copy of this decision is being forwarded to the IB.

Rafael Bacares
PCT Legal Examiner
Office of PCT Legal Administration

Harry C. Kim
PCT Special Programs Examiner
Office of PCT Legal Administration
Telephone: (571) 272-3285

ATTACHMENT: Corrected Notification of Transmittal of the International Search Report and the Written Opinion of the International Searching Authority, or the Declaration (form PCT/ISA/220), International Search Report (form PCT/ISA/210), and Written Opinion of the International Searching Authority (form PCT/ISA/237)

UNITED STATES PATENT and TRADEMARK OFFICE

COMMISSIONER FOR PATENTS
UNITED STATES PATENT AND TRADEMARK OFFICE
P.O BOX 1450
ALEXANDRIA, VA 22313-1450
www.uspto.gov

MICHAEL D. CARTONA
MCCORMICK, PAULDING & HUBER LLP
CITYPLACE II, 185 ASYLUM STREET
HARTFORD CT CONNECTICUT 06103-3402

MAILED

OCT 14 2011

PCT LEGAL ADMINISTRATION

In re Application of: DECISION ON
TRUMBULL VENTURES LLC :
PCT No.: PCT/US2010/03251 : DECISION ON
Int. Filing Date: 23 December 2010 :
Priority Date: 24 December 2009 : PETITION UNDER
Attorney's Docket No.: 5445-0001WO :
For: MEHTOD AND APPARATUS... : 37 CFR 1.181
THREE DIMENSIONS :

This decision is in response to the "PAYMENT OF ADDITIONAL FEES UNDER PROTEST," faxed on 27 April 2011, and is being treated as a petition under 37 CFR 1.181. The petition requests that the "PAYMENT OF ADDITION FEES UNDER PROTEST," was timely filed via facsimile on 28 February 2011 to paid the additional fee for one additional invention if the protest was dismissed, and requests a corrected International Search Report and Written Opinion.

BACKGROUND

Petitioner filed aforementioned international application on 23 December 2010 to the United States Patent and Trademark Office Receiving Office (RO/US). These papers have been given the application number of PCT/US2010/03251.

On 10 January 2011, the United States Receiving Office (RO/US) mailed applicant a "NOTIFICATION OF THE INTERNATIONAL APPLICATION NUMBER AND OF THE INTERNATIONAL FILING DATE" (Form PCT/RO/105) stating that the international filing date is 23 December 2010.

On 28 January 2011, the United States Receiving Office (US/RO) mailed an "INVITATION TO PAY ADDITIONAL FEES AND, WHERE APPLICABLE, PROTEST FEE," to applicant, indicating that International Searching Authority (ISA) considers there are 2 inventions and that applicant is invited to pay, within the time indicated (one month from the date mailing of the invitation), $2080 for the additional invention.

On 18 April 2011, the RO/US issued a "Notification of Transmittal of The International Search Report and The Written Opinion of The International Search Authority, or The Declaration" (Form PCT/ISA/220), International Search Report (PCT/ISA/210), and Written Opinion of The International Searching Authority (PCT/ISA/237). The International Search Report indicated that because no required additional search fees were timely paid by the applicant, the international search report is restricted to the invention first mentioned in the claims 1-9.

On 27 April 2011, applicant filed this petition requesting a corrected international search report and written opinion since the reply was filed timely via facsimile.

DISCUSSION

§ 1.6 Receipt of correspondence:

> (d) *Facsimile transmission.* Except in the cases enumerated below, correspondence, including authorizations to charge a deposit account, may be transmitted by facsimile. The receipt date accorded to the correspondence will be the date on which the complete transmission is received in the United States Patent and Trademark Office, unless that date is a Saturday, Sunday, or Federal holiday within the District of Columbia. See § **1.6**(a)(3). To facilitate proper processing, each transmission session should be limited to correspondence to be filed in a single application or other proceeding before the United States Patent and Trademark Office. The application number of a patent application, the control number of a reexamination proceeding, the interference number of an interference proceeding, or the patent number of a patent should be entered as a part of the sender's identification on a facsimile cover sheet. Facsimile transmissions are not permitted and, if submitted, will not be accorded a date of receipt in the following situations:
>
> (3) Correspondence which cannot receive the benefit of the certificate of mailing or transmission as specified in § **1.8**(a)(2)(i)(A) through (D) and (F), and § **1.8**(a)(2)(iii)(A), except that a continued prosecution application under § **1.53**(d) may be transmitted to the Office by facsimile;

§ 1.8 Certificate of mailing or transmission:

> (2) The procedure described in paragraph (a)(1) of this section does not apply to, and no benefit will be given to a Certificate of Mailing or Transmission on, the following:
>
> (i)*Relative to Patents and Patent Applications*
>
> (D) The filing of an international application for patent;
>
> (E) The filing of correspondence in an international application before the U.S. Receiving Office, the U.S. International Searching Authority, or the U.S. International Preliminary Examining Authority;

The Certification of Mailing or Transmission claim is not applicable in this instance because this is an international application, and it is excluded from the provisions of Certificate of Mailing under 37 CFR §1.8. 37 CFR §1.8(a)(2) states as noted above that the procedure described in 1.8(a) that a correspondence will be considered timely filed does not apply to, and no benefit will be given to a Certificate of mailing or transmission on the following: ...; (e) The filing of correspondence in an international application before the U.S. Receiving Office.

Accordingly, the filing of the reply the "PAYMENT OF ADDITIONAL FEES UNDER PROTEST" via facsimile precludes it to receive a reply date from the U.S. Receiving Office (RO/US) of 28 February 2011as this type of transmission for a correspondence is not accepted for an international application under 37§§ CFR 1.6(d)(3) and 1.8(a)(2)(i)(E).

For the above reasons, PAYMENT OF ADDITIONAL FEES UNDER PROTEST has not been timely filed for the above international application and the "Notification of the Transmittal of the International Search Report and the Written Opinion of the International Searching Authority" mailed on 18 April 2011were correct and proper.

CONCLUSION

For the above reason above, the petition under 37 CFR 1.181 is **DISMISSED.**

If reconsideration of the merits of the petition under 37 CFR 1.181 is desired, applicant must file a request for reconsideration within **TWO (2) MONTHS** from the mail date of this Decision. Any reconsideration request should include a cover letter entitled "Renewed Petition Under 37 CFR 1.181."

Any further correspondence with respect to this matter may be filed electronically via EFS-Web selecting the document description "Petition for review and processing by the PCT Legal Office" or by mail addressed to Mail Stop PCT, Commissioner for Patents, Office of PCT Legal Administration, P.O. Box 1450, Alexandria, Virginia 22313-1450, with the contents of the letter marked to the attention of the Office of PCT Legal Administration.

Rafael Bacares
PCT Legal Examiner
PCT Legal Office
Tel: (571) 272-3276
Fax: (571) 273-0459

UNITED STATES PATENT and TRADEMARK OFFICE

COMMISSIONER FOR PATENTS
UNITED STATES PATENT AND TRADEMARK OFFICE
P.O BOX 1450
ALEXANDRIA, VA 22313-1450
www.uspto.gov

MICHAEL D. CARTONA
MCCORMICK, PAULDING & HUBER LLP
CITYPLACE II, 185 ASYLUM STREET
HARTFORD CT CONNECTICUT 06103-3402

MAILED
APR 11 2012
PCT LEGAL ADMINISTRATION

In re Application of:	:	
TRUMBULL VENTURES LLC	:	
PCT No.: PCT/US2010/03251	:	DECISION ON
Int. Filing Date: 23 December 2010	:	
Priority Date: 24 December 2009	:	PETITION UNDER
Attorney's Docket No.: 5445-0001WO	:	
For: MEHTOD AND APPARATUS... THREE DIMENSIONS	:	37 CFR 1.181

This decision is in response to the "REQUEST FOR RECONSIDERATION OF DECISION ON PETITION UNDER 37 CFR 1.181," filed on 02 December 2011. The renewed petition states that the "PAYMENT OF ADDITIONAL FEES UNDER PROTEST," was timely filed via facsimile on 28 February 2011, and requests a corrected International Search Report and Written Opinion.

BACKGROUND

On 14 October 2011, this Office entered a decision dismissing the petition filed on 27 April 2011. The decision stated that the Certificate of Mailing or Transmission provision is not applicable for international applications.

On 02 December 2011, petitioner filed a renewed petition stating that a copy of the auto-reply from the USPTO indicated that the PAYMENT OF ADDITIONAL FEES UNDER PROTEST was, in fact, timely filed and received by the USPTO on 28 February 2011. As a result, petitioner requests a corrected International Search Report and Written Opinion by the USPTO.

DISCUSSION

§ 1.6 Receipt of correspondence:

> (d) *Facsimile transmission.* Except in the cases enumerated below, correspondence, including authorizations to charge a deposit account, may be transmitted by facsimile. The receipt date accorded to the correspondence will be the date on which the complete transmission is received in the United States Patent and Trademark Office, unless that date is a Saturday, Sunday, or Federal holiday within the District of Columbia. See § 1.6(a)(3). To facilitate proper processing, each transmission session should be limited to correspondence to be filed in a single application or other proceeding before the United States Patent and Trademark Office. The application number of a patent application, the control number of a reexamination proceeding, the interference number of an interference proceeding, or the patent number of a patent should be entered as a part of the sender's identification on a facsimile cover sheet. Facsimile transmissions are not permitted and, if submitted, will not be accorded a date of receipt in the following situations:

(3) Correspondence which cannot receive the benefit of the certificate of mailing or transmission as specified in § 1.8(a)(2)(i)(A) through (D) and (F), and § 1.8(a)(2)(iii)(A), except that a continued prosecution application under § 1.53(d) may be transmitted to the Office by facsimile;

§ 1.8 Certificate of mailing or transmission:

(2) The procedure described in paragraph (a)(1) of this section does not apply to, and no benefit will be given to a Certificate of Mailing or Transmission on, the following:

(i)*Relative to Patents and Patent Applications*

(D) The filing of an international application for patent;

(E) The filing of correspondence in an international application before the U.S. Receiving Office, the U.S. International Searching Authority, or the U.S. International Preliminary Examining Authority;

MPEP section 1805, the relevant part states:

It should be further noted, however, that PCT international applications and papers relating to international applications are specifically excluded from the Certificate of Mailing or Transmission procedures under 37 CFR 1.8. See MPEP § 1834. If 37 CFR 1.8 is improperly used, the date to be accorded the paper will be the date of actual receipt in the Office unless the receipt date falls on a Saturday, Sunday, or Federal holiday in which case the date of receipt will be the next succeeding day which is not a Saturday, Sunday, or Federal holiday (37 CFR 1.6).

Irrespective of the Certification practice under 37 CFR 1.8(a), facsimile transmission (without the benefit of the certificate under 37 CFR 1.8(a)) may be used to submit certain papers in international applications.

Petitioner has misinterpreted the decision of 14 October 2011. The decision did state not that petitioner could not submit certain papers for the present international application via facsimile transmissions. Instead, the decision pointed that the Certificate of Mailing provisions under 37 CFR § 1.8 cannot be used to establish a timely mailing of papers filed for international applications via facsimile. This lack of benefit of the Certificate of mailing provisions for international applications is stipulated by reading in combination rules 37 CFR §§ 1.6, and 1.8.

The PAYMENT OF ADDITIONAL FEES UNDER PROTEST is permitted to be transmitted by facsimile for aforementioned application. However, in this instance, applicant did not fax the papers through the official centralized USPTO fax number 571-273-8300. As a result, the USPTO was not able to locate the papers filed. As such, the USPTO does not have possession of the above papers allegedly filed on 28 February 2011. Consequently, as discussed above, the certificate of facsimile under 37 CFR 1.8 is not valid as a basis to support a timely filing via facsimile for the PAYMENT OF ADDITIONAL FEES UNDER PROTEST for aforementioned application.

Nevertheless, petitioner is not requesting to be accorded the date of submission under the Certificate of mailing and transmission provisions, rather petitioner wants the auto-reply of February 28, 2011 to be treated under the post-card receipt procedures of the USPTO.

Section 503 of the MPEP is specific as to the requirements needed for applicants to seek relief under the USPTO stamped return postcard provision.

The relevant part states:

MPEP 503 provides:

The USPTO will stamp the receipt date on the postcard and place it in the outgoing mail. A postcard receipt which itemizes and properly identifies the items which are being filed serves as prima facie evidence of receipt in the USPTO of all the items listed thereon on the date stamped thereon by the USPTO.

> *The identifying data on the postcard should be so complete as to clearly identify the item for which a receipt is requested. For example, the postcard should identify the applicant's name, application number (if known), confirmation number (if known), filing date, interference number, title of the invention, etc. The postcard should also identify the type of paper being filed, e.g., new application, affidavit, amendment, notice of appeal, appeal brief, drawings, fees, motions, supplemental oath or declaration, petition, etc., and the number of pages being submitted. If a new application is being filed, all parts of the application being submitted should be separately listed on the postcard, e.g., the number of pages of specification (including written description, claims and abstract), number of claims, number of sheets of drawings, number of pages of oath/declaration, number of pages of cover sheet (provisional application).*
>
> *The postcard receipt will not serve as prima facie evidence of receipt of any item which is not adequately itemized on the postcard. For example, merely listing on the postcard "a complete application" or "patent application" will not serve as a proper receipt for each of the required components of an application (e.g., specification (including claims), drawings (if necessary), oath or declaration and the application filing fee) or missing portions (e.g., pages, sheets of drawings) of an application if one of the components or portion of a component is found to be missing by the USPTO. Each separate component should be specifically and properly itemized on the postcard. Furthermore, merely incorporating by reference in the postcard receipt, the items listed in a transmittal letter will not serve as prima facie evidence of receipt of those items.*
>
> *The person receiving the item(s) in the USPTO will check the listing on the postcard against the item(s) being filed to be sure they are properly identified and that all the items listed on the postcard are presently being submitted to the USPTO. If any of the items listed on the postcard are not being submitted to the USPTO, those items will be crossed off and the postcard initialed by the person receiving the items.*

Pursuant MPEP 503, items listed on the return receipt itemized postcard serves as *prima facie* evidence of receipt in the USPTO on the date stamped by the USPTO. As noted above, it is important that the return postcard itemize all of the components of the application. If the postcard does not itemize each of the components of the application, it will not serve as evidence that any component which was not itemized was received by the United States Patent and Trademark Office (USPTO).

In contrast to the return itemized stamped postcard, a facsimile auto-reply is not itemized and the facsimile transmission is not checked by a person as to the items received at the USPTO against the list of the items sent. The auto-reply only indicates that something was received at the USPTO but does not list what was received. Consequently, a facsimile auto-reply cannot be treated as an equivalent to an itemized USPTO stamped return postcard.

The receipt of the PAYMENT OF ADDITIONAL FEES UNDER PROTEST papers is April 27, 2011 as this is the date the USPTO gained possession of said papers. For the above reasons, the PAYMENT OF ADDITIONAL FEES UNDER PROTEST was not timely filed for the above international application. Therefore, the Notification of the Transmittal of the International Search Report and the Written Opinion of the International Searching Authority mailed on 18 April 2011 are correct and proper.

CONCLUSION

For the above reason above, the renewed petition under 37 CFR 1.181 is **DISMISSED.**

If reconsideration of the merits of the petition under 37 CFR 1.181 is desired, applicant must file a request for reconsideration within **TWO (2) MONTHS** from the mail date of this Decision. Any reconsideration request should include a cover letter entitled "Renewed Petition Under 37 CFR 1.181."

Any further correspondence with respect to this matter may be filed electronically via EFS-Web selecting the document description "Petition for review and processing by the PCT Legal Office" or by mail addressed to Mail Stop PCT, Commissioner for Patents, Office of PCT Legal Administration, P.O. Box 1450, Alexandria, Virginia 22313-1450, with the contents of the letter marked to the attention of the Office of PCT Legal Administration.

Rafael Bacares
PCT Legal Examiner
PCT Legal Office
Tel: (571) 272-3276
Fax: (571) 273-0459

1 - SEP 2010

UNITED STATES PATENT and TRADEMARK OFFICE

COMMISSIONER FOR PATENTS
UNITED STATES PATENT AND TRADEMARK OFFICE
P.O BOX 1450
ALEXANDRIA, VA 22313-1450
www.uspto.gov

DAVID M. LOCKMAN
CHASE TOWER
111 MONUMENT CIRCLE, SUITE 3250
INDIANAPOLIS IN INDIANA 46204-5109

In re Application of: DECISION ON DU et al	
PCT No.: PCT/US10/20991	DECISION ON
Int. Filing Date: 14 January 2009	
Priority Date: NA	PETITION UNDER
Attorney's Docket No.: 1570-0048PCT	
For: SYSTEM AND METHOD... TO A SCLERA IMAGE	37 CFR 1.181

This decision is in response to the "PETITION UNDER 37 CFR 1.181," filed on 20 August 2010. The petition requests the correction of the priority claim date in the above-captioned international application.

BACKGROUND

Petitioner filed aforementioned international application on 14 January 2010 with the United States Patent and Trademark Office Receiving Office (USPTO) (RO/US).

On 04 August 2010, the United States Receiving Office (RO/US) mailed an "INVITATION TO CORRECT PRIORITY CLAIM AND/OR NOTIFICATION OF POSSIBILITY TO REQUEST RESTORATION OF THE RIGHT OF PRIORITY (Form PCT/RO/110).

On 20 August 2010, applicant filed the current petition to correct the priority claim.

DISCUSSION

A petition to the Director filed under 37 CFR 1.181 is to correct an error done by the USPTO during the processing of the application. In this instance, the USPTO did not commit an error as it followed the proper procedures set forth by the PCT rules. Moreover, applicant's argument that the mistake was due to unintentional oversight is irrelevant under 37 CFR 1.181 as the mistake lies with applicant rather than the USPTO and this not the proper petition to put forth this argument.

PCT Rule 26*bis*.1(a) states that the applicant may correct a priority claim within a time limit of 16 months from the priority date or four months from the international filing date.

Further, PCT Rule 26*bis*.2(ii) indicates that where the receiving Office finds in relation to a priority claim: (ii) that the priority claim does not comply with the requirements of Rule 4.10 the receiving Office shall invite the applicant to correct the priority claim.

In this instance, applicant failed to comply with PCT Rule 4.10(a)(iii) as indicated in the invitation/notification mailed on 04 August 2010 as the priority claim failed to state the country in which the earlier application was filed.

As the result, as stated above the RO/US properly followed the procedures set forth by the PCT rules.

CONCLUSION

CONCLUSION

For the above reason above, the petition under 37 CFR 1.181 is **DISMISSED.**

If reconsideration of the merits of the petition under 37 CFR 1.181 is desired, applicant must file a request for reconsideration within **TWO (2) MONTHS** from the mail date of this Decision. Any reconsideration request should include a cover letter entitled "Renewed Petition Under 37 CFR 1.181." Extensions of time are available under 37 CFR 1.136(a).

Any further correspondence with respect to this matter may be filed electronically via EFS-Web selecting the document description "Petition for review and processing by the PCT Legal Office" or by mail addressed to Mail Stop PCT, Commissioner for Patents, Office of PCT Legal Administration, P.O. Box 1450, Alexandria, Virginia 22313-1450, with the contents of the letter marked to the attention of the Office of PCT Legal Administration.

Rafael Bacares
PCT Legal Examiner
PCT Legal Office
Telephone: (571) 272-3276
Facsimile: (571) 273-0459

UNITED STATES PATENT AND TRADEMARK OFFICE

Commissioner for Patents
United States Patent and Trademark Office
P.O. Box 1450
Alexandria, VA 22313-1450
www.uspto.gov

MAILED

DEC 05 2011

PCT LEGAL ADMINISTRATION

JEFFREY B. OSTER
ASEMBLON, INC.
LEGAL DEPARTMENT
15340 NE 92ND ST. SUITE B
REDMOND WA WASHINGTON 98052

In re Application of: ASEMBLON, INC.
PCT No.: PCT/US2010/024504
International Filing Date: 17 February 2010
Priority Date Claimed: 17 February 2009
Attorney's Docket No.: ASEM-12WO
For: HYDROGEN RELEASE AND RECOVERY FROM ALIPHATIC PRIMARY AMINES OR DI-AMINES

DECISION

This decision is issued in response to the "Response to Notification Concerning Payment of Prescribed Fees Together with Late Payment Fee" filed by applicant on 06 May 2010, treated herein as a petition to vacate the "Invitation To Pay Prescribed Fees Together With Late Payment Fee" (Form PCT/RO/133) mailed 07 April 2010. No petition fee is required.

BACKGROUND

On 17 February 2010 applicant filed materials to initiate the present international application including, among other materials, a Request (Form PCT/RO/101). The submission was not accompanied by a fee payment.

On 24 February 2010, the United States Receiving Office (RO/US) mailed a "Notification Concerning Payment of Prescribed Fees" (Form PCT/RO/102) indicating that $3,522 in fees was required.

On 17 March 2010, applicants submitted a fee payment of $3,425.

On 07 April 2010, the RO/US mailed an "Invitation To Pay Prescribed Fees Together with Late Payment Fee" (Form PCT/RO/133) requiring submission of $337 ($97 in outstanding fees plus a late fee of $240). The Form PCT/RO/133 indicated that the failure to submit payment of such fees within one month of the mailing date would result in the application being considered withdrawn.

On 06 May 2010, applicant filed the "Response to Notification Concerning Payment of Prescribed Fees Together with Late Payment Fee" considered as a petition herein. The submission was not accompanied by payment of the additional required fees.

DISCUSSION

As set forth above, the "Notification Concerning Payment of Prescribed Fees" mailed on 24 February 2010 indicated that a total of $3,522 in fees was required herein. The fees were itemized as follows: $240 as the transmittal fee, $2,080 as the search fee, and $1,202 as the international filing fee. It is noted that the $1,202 international filing fee was the applicable international filing fee where, as here, the application was filed electronically using the EFS-Web filing system but without a PCT Easy zip file.

As evidenced by the Electronic Acknowledgement Receipt generated with respect to applicant's 17 March 2010 fee payment, applicant did not submit the full $3,522 required here. Rather, applicant submitted a payment of $3,425. This fee payment is itemized on the Electronic Patent Application Fee Transmittal contained in the application file as follows: $240 for the transmittal fee, $2,080 for the search fee, and $1,105 as the international filing fee. It is noted that $1,105 was the applicable international filing fee for an application filed electronically using the EFS Web system **and** with a PCT Easy zip file.

The present application was not filed with a PCT Easy zip file. Accordingly, the lower $1,105 international filing fee paid by applicant on 17 March 2010 was not the applicable fee for the present application. Rather, the appropriate international filing fee was $1,202, as expressly indicated in the "Notification Concerning Payment of Prescribed Fees" mailed on 24 February 2010. Applicant's 17 March 2010 fee payment was therefore $97 less than the total fees required.

The present petition was not accompanied by any evidence to indicate that, prior to the mailing of the Invitation To Pay Prescribed Fees Together with Late Payment Fee," applicant had paid the full $1,202 international filing fee due in the present application. Thus, in view of applicant's $97 underpayment with respect to the applicable international filing fee, the "Invitation To Pay Prescribed Fees Together with Late Payment Fee" mailed on 07 April 2010, which required payment of the outstanding $97 in fees plus the applicable late payment fee, was properly issued pursuant to PCT Rule 16bis.1(a).

Based on the above, applicants' 06 May 2010 petition asserting that the "Invitation To Pay Prescribed Fees Together with Late Payment Fee" was issued in error and that "there is no balance due" is not supported by the record. Applicant's petition is therefore appropriately dismissed.

Applicant's 06 May 2010 filing did not include payment of the additional $337 in fees required by the Invitation To Pay Prescribed Fees Together with Late Payment Fee." Applicant therefore failed to submit the required fees within the allotted one month from the mail date of the Invitation. The international application is therefore appropriately withdrawn by the RO/US pursuant to PCT Rule 16bis.1(c).

CONCLUSION

Applicant's petition to vacate the "Invitation To Pay Prescribed Fees Together With Late Payment Fee" (Form PCT/RO/133) mailed 07 April 2010 is **DISMISSED** without prejudice.

Based on applicant's failure to pay the required outstanding fees and late payment fee within one month from the mailing of the "Invitation To Pay Prescribed Fees Together With Late Payment Fee," the present international application is appropriately withdrawn by the RO/US.

The application is being referred to the RO/US for further processing in accordance with this decision, including the mailing of a "Notification That International Application Considered To Be Withdrawn" (Form PCT/RO/117) indicating that the international application is considered withdrawn based on applicant's failure to timely file the required fees in response to the "Invitation To Pay Prescribed Fees Together With Late Payment Fee" mailed on 07 April 2011.

/RichardMRoss/

Richard M. Ross
Attorney Advisor
Office of PCT Legal Administration
Telephone: (571) 272-3296

UNITED STATES PATENT AND TRADEMARK OFFICE

MAILED

JAN 13 2011

Commissioner for Patents
United States Patent and Trademark Office
P.O. Box 1450
Alexandria, VA 22313-1450
www.uspto.gov

PCT LEGAL ADMINISTRATION

CATHERINE M. MCCARTY
LANDO & ANASTASI, LLP
ONE MAIN STREET, ELEVENTH FLOOR
CAMBRIDGE MA MASSACHUSETTS 02142

In re Application of
AGIOS PHARMACEUTICALS, INC.
PCT No.: PCT/US10/27253
In. Filing Date: 12 March 2010
Priority Date: 22 May 2009
Atty. Docket No.: 02081-7013WO
For: METHODS AND COMPOSITIONS FOR CELL-PROLIFERATION-RELATED DISORDERS

: DECISION on
:
: REFUND

This is in response to applicant's "Petition for Refund of Additional Search Fees" filed 29 November 2010 in the United States Patent and Trademark Office (USPTO).

On 12 March 2010, applicant filed international application No. PCT/US10/27253 which claimed priority of earlier provisional U.S. applications along with a fee calculation sheet. Thereafter, on 14 June 2010, applicant was invited to pay additional fees of $2080 to the International Searching Authority (ISA/US) to search an additional invention. On 04 August 2010, applicant paid the additional search fee to search the additional invention.

On 29 November 2010, applicant filed the instant request for refund of the additional search fee.

A review of the application reveals that applicant paid $2080 as the search fee for the present application and paid the additional search fee of $2080. The RO/US charged Deposit account 50-2762 in the amount of $2080 as an additional search fee. The present submission seeks a refund of the extra $2080 charged by the RO/US, asserting that the ISA/US did not conduct a search of the second invention. A review of the ISA/210 and ISA/220 indicates that a search of the second invention was not performed.

Based on the above, the additional search fee for the present application will be refunded to applicant's deposit account in the amount of $2080. The request for refund is **GRANTED**.

/Cynthia M. Kratz/
Cynthia M. Kratz
Attorney Advisor
PCT Legal Office
Office of PCT Legal Administration
Telephone: 571-272-3286
Fax: 571-272-0459

UNITED STATES PATENT AND TRADEMARK OFFICE

13 SEP 2010

Commissioner for Patents
United States Patent and Trademark Office
P.O. Box 1450
Alexandria, VA 22313-1450
www.uspto.gov

PAUL ROYAL
313 COURTNEY SPRING CIRCLE
WINTER SPRINGS, FL 32708

In re Application of	:	
FLORIDA A&M UNIVERSITY	:	
PCT No.: PCT/US2010/032867	:	
Int. Filing Date: 29 April 2010	:	DECISION
Priority Date: 29 April 2009	:	
Attorney's Docket No.: FAMUTT02PCT	:	
For: BABY BOTTLE HOLDER	:	

This decision is response to applicant's correspondence of 26 August 2010 requesting withdrawal of the international application.

On 29 April 2010, applicant filed the above-captioned international application in the United States Receiving Office (RO/US).

On 26 August 2010, applicant filed a request for withdrawal of the international application.

Applicant is advised that the request for withdrawal of the international application filed 26 August 2010 can not be approved as it has only been signed by attorney Paul Royal and a power of attorney executed by all of the applicants has not been submitted in the application. Applicants may file a request to withdraw the international application under PCT Rule 90bis.1. Any notice of withdrawal referred to in PCT Rules 90bis.1 to 90bis.4 shall, subject to paragraph (b), be signed by all the applicants (see PCT Rule 90bis.5). Since the applicants (including all applicant/inventors) have not signed the request to withdraw the international application nor have they appointed Paul Royal as their agent, applicants' request to withdraw the international application is not approved.

Any further correspondence with respect to this matter should be directed to Mail Stop PCT, Commissioner for Patents, Office of PCT Legal Administration, P.O. Box 1450, Alexandria, Virginia 22313-1450, with the contents of the letter marked to the attention of the Office of PCT Legal Administration.

Derek A. Putonen
Attorney Advisor
Office of PCT Legal Administration
Tel: (571) 272-3294

UNITED STATES PATENT AND TRADEMARK OFFICE

Commissioner for Patents
United States Patent and Trademark Office
P.O. Box 1450
Alexandria, VA 22313-1450
www.uspto.gov

IRAH H. DONNER
WILMER CUTLER PICKERING HALE AND DORR LLP
399 PARK AVENUE
NEW YORK, NY 10022

MAILED
DEC 12 2011
PCT LEGAL ADMINISTRATION

In re Application of: STATE STREET CORPORATION	:	PETITION
PCT Application No.: PCT/US2010/033039	:	
International Filing Date: 29 April 2010	:	
Priority Date: 30 April 2009	:	UNDER
Attorney's Docket No.: 0085920.00158WO2	:	
For: COMPUTER SYSTEM FOR DOMESTIC AND	:	
INTERNATIONAL ENHANCED CUSTODY AND	:	
PRINCIPAL LENDING OF SECURITIES	:	37 CFR 1.181

This decision is in response to applicants' "Request to Vacate International Search Report for International Application No. PCT/US10/33039" filed 27 October 2011, which has been treated as a petition under 37 C.F.R. 1.181. No petition fee is required.

BACKGROUND

On 28 June 2010, the United States International Searching Authority (ISA/US) issued a Notification of Transmittal of the International Search Report and the Written Opinion of the International Searching Authority, or the Declaration (form PCT/ISA/220), International Search Report (form PCT/ISA/210), and Written Opinion of the International Searching Authority (form PCT/ISA/237). The International Search Report established a new title of "COMPUTER SYSTEM FOR DOMESTIC AND INTERNATIONAL ENHANCED CUSTODY AND PRINCIPAL LENDING OF INSECURITIES".

On 27 October 2011, applicants filed the present petition requesting that the ISA/US vacate the International Search Report and issue a corrected International Search Report which corrects the misspelling of the word "INSECURITIES" to "SECURITIES" in the newly established title.

DISCUSSION

A review of the file reveals that the word "INSECURITIES" in the newly established title should have been "SECURITIES".

CONCLUSION

For the reasons given above, the applicants' petition under 37 CFR 1.181 is **GRANTED**.

The Corrected International Search Report (form PCT/ISA/210) along with a Notification of Transmittal of the International Search Report and the Written Opinion of the International Searching Authority, or the Declaration (form PCT/ISA/220) and Written Opinion of the International Searching Authority (form PCT/ISA/237) are attached to this decision. A copy of this decision is being forwarded to the IB.

Bryan Lin
PCT Legal Examiner
Office of PCT Legal Administration

Harry C. Kim
PCT Special Programs Examiner
Office of PCT Legal Administration
Telephone: (571) 272-3285

ATTACHMENT: Corrected International Search Report (form PCT/ISA/210), a Notification of Transmittal of the International Search Report and the Written Opinion of the International Searching Authority, or the Declaration (form PCT/ISA/220), and a Written Opinion of the International Searching Authority (form PCT/ISA/237)

PATENT COOPERATION TREATY

From the INTERNATIONAL SEARCHING AUTHORITY

To:
IRAH H. DONNER
WILMER CUTLER PICKERING HALE AND DORR LLP
399 PARK AVENUE
NEW YORK, NY 10022

PCT

NOTIFICATION OF TRANSMITTAL OF THE INTERNATIONAL SEARCH REPORT AND THE WRITTEN OPINION OF THE INTERNATIONAL SEARCHING AUTHORITY, OR THE DECLARATION

(PCT Rule 44.1)

	Date of mailing *(day/month/year)* 12 DEC 2011
Applicant's or agent's file reference 0085920.00158WO2	**FOR FURTHER ACTION** See paragraphs 1 and 4 below
International application No. PCT/US 10/33039	International filing date *(day/month/year)* 29 April 2010 (29.04.2010)
Applicant STATE STREET CORPORATION	

1. ☒ The applicant is hereby notified that the international search report and the written opinion of the International Searching Authority have been established and are transmitted herewith.

   Filing of amendments and statement under Article 19:
   The applicant is entitled, if he so wishes, to amend the claims of the international application (see Rule 46):

   When? The time limit for filing such amendments is normally two months from the date of transmittal of the international search report.

   Where? Directly to the International Bureau of WIPO, 34 chemin des Colombettes 1211 Geneva 20, Switzerland, Facsimile No.: +41 22 338 8270

   For more detailed instructions, see the notes on the accompanying sheet.

2. ☐ The applicant is hereby notified that no international search report will be established and that the declaration under Article 17(2)(a) to that effect and the written opinion of the International Searching Authority are transmitted herewith.

3. ☐ **With regard to the protest** against payment of (an) additional fee(s) under Rule 40.2, the applicant is notified that:

   ☐ the protest together with the decision thereon has been transmitted to the International Bureau together with the applicant's request to forward the texts of both the protest and the decision thereon to the designated Offices.

   ☐ no decision has been made yet on the protest; the applicant will be notified as soon as a decision is made.

4. **Reminders**

   Shortly after the expiration of **18 months** from the priority date, the international application will be published by the International Bureau. If the applicant wishes to avoid or postpone publication, a notice of withdrawal of the international application, or of the priority claim, must reach the International Bureau as provided in Rules 90*bis*.1 and 90*bis*.3, respectively, before the completion of the technical preparations for international publication.

   The applicant may submit comments on an informal basis on the written opinion of the International Searching Authority to the International Bureau. The International Bureau will send a copy of such comments to all designated Offices unless an international preliminary examination report has been or is to be established. These comments would also be made available to the public but not before the expiration of 30 months from the priority date.

   Within **19 months** from the priority date, but only in respect of some designated Offices, a demand for international preliminary examination must be filed if the applicant wishes to postpone the entry into the national phase **until 30 months** from the priority date (in some Offices even later); otherwise, the applicant must, **within 20 months** from the priority date, perform the prescribed acts for entry into the national phase before those designated Offices.

   In respect of other designated Offices, the time limit of **30 months** (or later) will apply even if no demand is filed within 19 months.

   See the Annex to Form PCT/IB/301 and, for details about the applicable time limits, Office by Office, see the *PCT Applicant's Guide*, Volume II, National Chapters and the WIPO Internet site.

Name and mailing address of the ISA/US Mail Stop PCT, Attn: ISA/US Commissioner for Patents P.O. Box 1450, Alexandria, Virginia 22313-1450 Facsimile No. 571-273-3201	Authorized officer: Lee W. Young PCT Helpdesk: 571-272-4300 PCT OSP: 571-272-7774

Form PCT/ISA/220 (January 2004) *(See notes on accompanying sheet)*

CORRECTED

PATENT COOPERATION TREATY

PCT

INTERNATIONAL SEARCH REPORT

(PCT Article 18 and Rules 43 and 44)

Applicant's or agent's file reference 0085920.00158WO2	**FOR FURTHER ACTION**	see Form PCT/ISA/220 as well as, where applicable, item 5 below.
International application No. PCT/US 10/33039	International filing date *(day/month/year)* 29 April 2010 (29.04.2010)	(Earliest) Priority Date *(day/month/year)* 30 April 2009 (30.04.2009)
Applicant STATE STREET CORPORATION		

This international search report has been prepared by this International Searching Authority and is transmitted to the applicant according to Article 18. A copy is being transmitted to the International Bureau.

This international search report consists of a total of 3 sheets.

☐ It is also accompanied by a copy of each prior art document cited in this report.

1. **Basis of the report**

   a. With regard to the **language**, the international search was carried out on the basis of:

   ☒ the international application in the language in which it was filed.

   ☐ a translation of the international application into _____ which is the language of a translation furnished for the purposes of international search (Rules 12.3(a) and 23.1(b)).

   b. ☐ This international search report has been established taking into account the **rectification of an obvious mistake** authorized by or notified to this Authority under Rule 91 (Rule 43.6*bis*(a)).

   c. ☐ With regard to any **nucleotide and/or amino acid sequence** disclosed in the international application, see Box No. I.

2. ☐ **Certain claims were found unsearchable** (see Box No. II).

3. ☐ **Unity of invention is lacking** (see Box No. III).

4. With regard to the **title**,

   ☐ the text is approved as submitted by the applicant.

   ☒ the text has been established by this Authority to read as follows:

COMPUTER SYSTEM FOR DOMESTIC AND INTERNATIONAL ENHANCED CUSTODY AND PRINCIPAL LENDING OF SECURITIES

5. With regard to the **abstract**,

   ☐ the text is approved as submitted by the applicant.

   ☒ the text has been established, according to Rule 38.2, by this Authority as it appears in Box No. IV. The applicant may, within one month from the date of mailing of this international search report, submit comments to this Authority.

6. With regard to the **drawings**,

   a. the figure of the drawings to be published with the abstract is Figure No. 1

   ☐ as suggested by the applicant.

   ☒ as selected by this Authority, because the applicant failed to suggest a figure.

   ☐ as selected by this Authority, because this figure better characterizes the invention.

   b. ☐ none of the figures is to be published with the abstract.

INTERNATIONAL SEARCH REPORT

International application No.
PCT/US 10/33039

Box No. IV Text of the abstract (Continuation of item 5 of the first sheet)

A system executes a principal lending transaction to lend international securities from lending accounts of a global entity to borrowing accounts of the entity acting as a principal and includes a database storing securities availability information indicating availability of the international securities available for borrowing from lending accounts, and a server implemented by a principal lender. The principal lending system configured to receive a short sale indication of a security for a borrowing account, electronically generate a transfer instruction to a custody-control computer system to transfer custody of the international shorted security from at least one lending account to the borrowing account of the same global entity as the global entity of the at least one lending account, electronically transmit the transfer instruction, and electronically transmit a second transfer instruction to the custody-control computer system to transfer custody of the shorted security from the principal to the borrowing account.

INTERNATIONAL SEARCH REPORT

International application No.
PCT/US 10/33039

A. CLASSIFICATION OF SUBJECT MATTER
IPC(8) - G06Q 40/00 (2010.01)
USPC - 705/38
According to International Patent Classification (IPC) or to both national classification and IPC

B. FIELDS SEARCHED

Minimum documentation searched (classification system followed by classification symbols)
IPC(8): G06Q 40/00 (2010.01)
USPC: 705/38

Documentation searched other than minimum documentation to the extent that such documents are included in the fields searched
USPC: 705/1.1, 35, 39, 80 (keyword limited; terms below)

Electronic data base consulted during the international search (name of data base and, where practicable, search terms used)
PubWest; Google Scholar; Google Patents; FreePatentsOnline; Dialog. Search terms used: securities stocks bonds fungible negotiable financial banknote debenture equity derivative contract forward future option swap, custody supervise watch safeguard protect care guard manage, account, loan lend borrow credit debt, entity corporation company ...

C. DOCUMENTS CONSIDERED TO BE RELEVANT

Category*	Citation of document, with indication, where appropriate, of the relevant passages	Relevant to claim No.
Y	US 2008/0065532 A1 (DE LA MOTTE) 13 March 2008 (13.03.2008) entire document, especially Abstract; para [0040], [0162], [0182], [0201], [0236], [0259], [0266], [0270], [0313], [0328], [0354]	1 - 35
Y	US 2007/0162365 A1 (WEINREB) 12 July 2007 (12.07.2007) entire document, especially Abstract; para [0077], [0932]-[0933], [1488], [2903]	1 - 35
A	US 2006/0155638 A1 (DE LA MOTTE) 13 July 2006 (13.07.2006) entire document	1 - 35

☐ Further documents are listed in the continuation of Box C. ☐

* Special categories of cited documents:
"A" document defining the general state of the art which is not considered to be of particular relevance
"E" earlier application or patent but published on or after the international filing date
"L" document which may throw doubts on priority claim(s) or which is cited to establish the publication date of another citation or other special reason (as specified)
"O" document referring to an oral disclosure, use, exhibition or other means
"P" document published prior to the international filing date but later than the priority date claimed
"T" later document published after the international filing date or priority date and not in conflict with the application but cited to understand the principle or theory underlying the invention
"X" document of particular relevance; the claimed invention cannot be considered novel or cannot be considered to involve an inventive step when the document is taken alone
"Y" document of particular relevance; the claimed invention cannot be considered to involve an inventive step when the document is combined with one or more other such documents, such combination being obvious to a person skilled in the art
"&" document member of the same patent family

Date of the actual completion of the international search	Date of mailing of the international search report
10 June 2010 (10.06.2010)	12 DEC 2011
Name and mailing address of the ISA/US Mail Stop PCT, Attn: ISA/US, Commissioner for Patents P.O. Box 1450, Alexandria, Virginia 22313-1450 Facsimile No. 571-273-3201	Authorized officer: Lee W. Young PCT Helpdesk: 571-272-4300 PCT OSP: 571-272-7774

Form PCT/ISA/210 (second sheet) (July 2009)

PATENT COOPERATION TREATY

From the
INTERNATIONAL SEARCHING AUTHORITY

To: IRAH H. DONNER
WILMER CUTLER PICKERING HALE AND
DORR LLP
399 PARK AVENUE
NEW YORK, NY 10022

PCT

WRITTEN OPINION OF THE
INTERNATIONAL SEARCHING AUTHORITY

(PCT Rule 43*bis*.1)

Date of mailing *(day/month/year)* 12 DEC 2011

Applicant's or agent's file reference	FOR FURTHER ACTION
0085920.00158WO2	See paragraph 2 below

International application No.	International filing date *(day/month/year)*	Priority date *(day/month/year)*
PCT/US 10/33039	29 April 2010 (29.04.2010)	30 April 2009 (30.04.2009)

International Patent Classification (IPC) or both national classification and IPC
IPC(8) - G06Q 40/00 (2010.01)
USPC - 705/38

Applicant STATE STREET CORPORATION

1. This opinion contains indications relating to the following items:

- ☒ Box No. I Basis of the opinion
- ☐ Box No. II Priority
- ☐ Box No. III Non-establishment of opinion with regard to novelty, inventive step and industrial applicability
- ☐ Box No. IV Lack of unity of invention
- ☒ Box No. V Reasoned statement under Rule 43*bis*.1(a)(i) with regard to novelty, inventive step or industrial applicability; citations and explanations supporting such statement
- ☐ Box No. VI Certain documents cited
- ☐ Box No. VII Certain defects in the international application
- ☐ Box No. VIII Certain observations on the international application

2. **FURTHER ACTION**

If a demand for international preliminary examination is made, this opinion will be considered to be a written opinion of the International Preliminary Examining Authority ("IPEA") except that this does not apply where the applicant chooses an Authority other than this one to be the IPEA and the chosen IPEA has notified the International Bureau under Rule 66.1*bis*(b) that written opinions of this International Searching Authority will not be so considered.

If this opinion is, as provided above, considered to be a written opinion of the IPEA, the applicant is invited to submit to the IPEA a written reply together, where appropriate, with amendments, before the expiration of 3 months from the date of mailing of Form PCT/ISA/220 or before the expiration of 22 months from the priority date, whichever expires later.

For further options, see Form PCT/ISA/220.

3. For further details, see notes to Form PCT/ISA/220.

Name and mailing address of the ISA/US	Date of completion of this opinion	Authorized officer:
Mail Stop PCT, Attn: ISA/US Commissioner for Patents P.O. Box 1450, Alexandria, Virginia 22313-1450 Facsimile No. 571-273-3201	10 June 2010 (10.06.2010)	Lee W. Young PCT Helpdesk: 571-272-4300 PCT OSP: 571-272-7774

Form PCT/ISA/237 (cover sheet) (July 2009)

WRITTEN OPINION OF THE INTERNATIONAL SEARCHING AUTHORITY

International application No.
PCT/US 10/33039

Box No. 1 Basis of this opinion

1. With regard to the **language**, this opinion has been established on the basis of:

   ☒ the international application in the language in which it was filed.

   ☐ a translation of the international application into _____ which is the language of a translation furnished for the purposes of international search (Rules 12.3(a) and 23.1(b)).

2. ☐ This opinion has been established taking into account the **rectification of an obvious mistake** authorized by or notified to this Authority under Rule 91 (Rule 43*bis*.1(a))

3. With regard to any **nucleotide and/or amino acid sequence** disclosed in the international application, this opinion has been established on the basis of a sequence listing filed or furnished:

   a. (means)

      ☐ on paper

      ☐ in electronic form

   b. (time)

      ☐ in the international application as filed

      ☐ together with the international application in electronic form

      ☐ subsequently to this Authority for the purposes of search

4. ☐ In addition, in the case that more than one version or copy of a sequence listing has been filed or furnished, the required statements that the information in the subsequent or additional copies is identical to that in the application as filed or does not go beyond the application as filed, as appropriate, were furnished.

5. Additional comments:

WRITTEN OPINION OF THE INTERNATIONAL SEARCHING AUTHORITY

International application No.
PCT/US 10/33039

Box No. V **Reasoned statement under Rule 43*bis*.1(a)(i) with regard to novelty, inventive step or industrial applicability; citations and explanations supporting such statement**

1. Statement

Novelty (N)	Claims	1 - 35	YES
	Claims	None	NO
Inventive step (IS)	Claims	None	YES
	Claims	1 - 35	NO
Industrial applicability (IA)	Claims	1 - 35	YES
	Claims	None	NO

2. Citations and explanations:

Claims 1 - 35 lack an inventive step under PCT Article 33(3) as being obvious over US 2008/0065532 A1 (De La Motte) in view of US 2007/0162365 A1 (Weinreb).

As to claim 1, De La Motte teaches a computer-implemented method for executing a principal lending transaction for securities managed by a global entity, to lend the securities from lending accounts of the entity to borrowing accounts of the global entity, in which the global entity acts as a principal in the transaction, the method comprising: electronically transmitting international securities availability information implemented by a principal lending computer system indicating availability of the international securities available for borrowing from lending accounts of the global entity (para [0162] - securities, [0182] - borrower; [0201] - global custody services); electronically transmitting the transfer instruction to the custody-control computer system (para [0201] - global custody services; para [0266] - transmit); and electronically receiving by the principal lending computer system a record of the custody transfer (para [0201] - global custody services; para [0259] - receive); but fails to explicitly teach electronically receiving a short sale indication of an international security for a borrowing account; electronically generating by the principle lending computer system a transfer instruction to a custody-control computer system to transfer custody of the shorted international security from at least one lending account to the borrowing account of the same global entity as the global entity of the at least one lending account.
However, Weinreb does teach electronically receiving a short sale indication of an international security for a borrowing account (para [0932]); electronically generating by the principle lending computer system a transfer instruction to a custody-control computer system to transfer custody of the shorted international security from at least one lending account to the borrowing account of the same global entity as the global entity of the at least one lending account (para [0933] - shorted; para [1488] - international; para [2903] - telephone or telegraphic transfers).
It would have been obvious to one of ordinary skill in the art to combine the revenue-producing bank card system & method providing the functionality & protection of trust-connected banking of De La Motte with the securities aid of Weinreb, because De La Motte and Weinreb are directed to systems and methods for enhanced custody and principal lending of domestic and international securities. Furthermore, users and designers benefit from methods adapted for eliminating errors in the calculation due to influences from options trading and arbitrage which also involve the use of short sales, because such systems/methods allow interactive coding and searching such that it structures strategic discipline and focuses it away from the usual primary emphasis on stock selection and market timing (shown to be minor considerations), thus enabling professional and ordinary investors improved flexibility (Weinreb, para [0077]).

- Please See Supplemental Box -

WRITTEN OPINION OF THE
INTERNATIONAL SEARCHING AUTHORITY

International application No.
PCT/US 10/33039

Supplemental Box

In case the space in any of the preceding boxes is not sufficient.
Continuation of:
Box V.2. Citations and explanations:

As to claim 14, De La Motte teaches a system for executing a principal lending transaction for securities managed by a global entity, to lend the securities from lending accounts of the entity to borrowing accounts of the global entity, in which the global entity acts as a principal in the transaction, the system comprising: a computer database configured to store international securities availability information indicating availability of the international securities available for borrowing from lending accounts of the global entity (para [0162] - securities, [0182] - borrower; [0201] - global custody services ; para [0236] - store); wherein the principal lending computer system is further configured to electronically transmit the transfer instruction to the custody-control computer (para [0201] - global custody services; para [0266] - transmit); wherein the principal lending computer system is further configured to electronically receive a record of the custody transfer (para [0201] - global custody services; para [0259] - receive); but fails to explicitly teach a computer server system implemented by a principal lending computer system connected to the computer database, the principal lending computer system being configured to receive a short sale indication of an international security for a borrowing account; wherein the principal lending computer system is further configured to electronically generate a transfer instruction to a custody-control computer system to transfer custody of the international shorted security from at least one lending account to the borrowing account of the same global entity as the global entity of the at least one lending account.
However, Weinreb does teach a computer server system implemented by a principal lending computer system connected to the computer database, the principal lending computer system being configured to receive a short sale indication of an international security for a borrowing account (para [0932]); wherein the principal lending computer system is further configured to electronically generate a transfer instruction to a custody-control computer system to transfer custody of the international shorted security from at least one lending account to the borrowing account of the same global entity as the global entity of the at least one lending account (para [0933] - shorted; para [1488] - international; para [2903] - telephone or telegraphic transfers).
It would have been obvious to one of ordinary skill in the art to combine the revenue-producing bank card system & method providing the functionality & protection of trust-connected banking of De La Motte with the securities aid of Weinreb, because De La Motte and Weinreb are directed to systems and methods for enhanced custody and principal lending of domestic and international securities. Furthermore, users and designers benefit from methods adapted for eliminating errors in the calculation due to influences from options trading and arbitrage which also involve the use of short sales, because such systems/methods allow interactive coding and searching such that it structures strategic discipline and focuses it away from the usual primary emphasis on stock selection and market timing (shown to be minor considerations), thus enabling professional and ordinary investors improved flexibility (Weinreb, para [0077]).

As to claim 27, De La Motte teaches a computer-implemented method for executing a principal lending transaction for securities managed by a global entity, to lend the securities from lending accounts of the entity to borrowing accounts of the global entity, in which the global entity acts as a principal in the transaction, the method comprising: enabling electronically transmitting international securities availability information implemented by a principal lending computer system indicating availability of the international securities available for borrowing from lending accounts of the global entity (para [0162] - securities, [0182] - borrower; [0201] - global custody services ; para [0236] - store); and enabling electronically receiving by the principal lending computer system a record of the custody transfer (para [0201] - global custody services; para [0259] - receive); but fails to explicitly teach enabling electronically receiving a short sale indication of an international security for a borrowing account; enabling electronically generating by the principle lending computer system a transfer instruction to a custody-control computer system to transfer custody of the shorted international security from at least one lending account to the borrowing account of the same global entity as the global entity of the at least one lending account enabling electronically transmitting the transfer instruction to the custody-control computer system.
However, Weinreb does teach enabling electronically receiving a short sale indication of an international security for a borrowing account (para [0932]); enabling electronically generating by the principle lending computer system a transfer instruction to a custody-control computer system to transfer custody of the shorted international security from at least one lending account to the borrowing account of the same global entity as the global entity of the at least one lending account enabling electronically transmitting the transfer instruction to the custody-control computer system (para [0933] - shorted; para [1488] - international; para [2903] - telephone or telegraphic transfers).
It would have been obvious to one of ordinary skill in the art to combine the revenue-producing bank card system & method providing the functionality & protection of trust-connected banking of De La Motte with the securities aid of Weinreb, because De La Motte and Weinreb are directed to systems and methods for enhanced custody and principal lending of domestic and international securities. Furthermore, users and designers benefit from methods adapted for eliminating errors in the calculation due to influences from options trading and arbitrage which also involve the use of short sales, because such systems/methods allow interactive coding and searching such that it structures strategic discipline and focuses it away from the usual primary emphasis on stock selection and market timing (shown to be minor considerations), thus enabling professional and ordinary investors improved flexibility (Weinreb, para [0077]).

As to claims 2, 15 and 28, in the combination of De La Motte and Weinreb, Weinreb further discloses wherein the short sale indication is received after the short sale by monitoring a trading computer system to detect short sales by borrowing accounts (para [0932]).

As to claims 3, 16 and 29, in the combination of De La Motte and Weinreb, Weinreb further discloses wherein the short sale indication is received before the short sale as a borrow request identifying a security to be borrowed based on the securities availability information (para [0932]).

As to claims 4 and 17, in the combination of De La Motte and Weinreb, De La Motte further discloses wherein the borrow request is received from an investment manager for the borrowing account (para [0040]).

As to claims 5, 18 and 30, in the combination of De La Motte and Weinreb, De La Motte further discloses wherein the step of electronically transmitting securities availability information comprises: electronically receiving a securities locate request identifying securities sought for borrowing (para [0266] - electronic request... investment); and electronically transmitting a securities locate request response indicating availability of the securities sought for borrowing (para [0270] - settling a securities transaction).

- Please See Supplemental Box -

WRITTEN OPINION OF THE
INTERNATIONAL SEARCHING AUTHORITY

International application No.
PCT/US 10/33039

Supplemental Box

In case the space in any of the preceding boxes is not sufficient.

Continuation of:
Box V.2. Citations and explanations:

As to claims 6 and 19, in the combination of De La Motte and Weinreb, De La Motte further discloses wherein the securities locate request is received from an investment manager for the borrowing account (para [0266] - electronic request... investment).

As to claims 7, 20 and 31, in the combination of De La Motte and Weinreb, De La Motte further discloses wherein the lending account and the borrowing account both belong to the same client of the entity (para [0328] - sub-accounts).

As to claims 8 and 21, in the combination of De La Motte and Weinreb, De La Motte further discloses wherein the securities availability information is stored in the principal lending computer system based on information from lending accounts seeking to participate in principal lending transactions (para [0354] - all-purpose unit participation trust).

As to claims 9 and 22, in the combination of De La Motte and Weinreb, De La Motte further discloses wherein the information from lending accounts seeking to participate in principal lending transactions is received from a lending agent of the entity (para [0201]).

As to claims 10, 23 and 32, in the combination of De La Motte and Weinreb, De La Motte further discloses initiating a lending transaction of long securities held by the borrowing account to a broker to obtain cash collateral for principal lending transaction (para [0201]).

As to claims 11, 24 and 33, in the combination of De La Motte and Weinreb, Weinreb further discloses wherein the electronically transmitting the second transfer instruction to the custody-control computer system to transfer custody of the shorted security from the principal to the borrowing account results in proceeds of sale of the borrowed security being transmitted to the borrowing account (para [0933]).

As to claims 12, 25 and 34, in the combination of De La Motte and Weinreb, Weinreb further discloses wherein the electronically transmitting the second transfer instruction to the custody-control computer system to transfer custody of the shorted security from the principal to the borrowing account results in proceeds of sale of the borrowed security being transmitted to the borrowing account allowing the client to initiate a purchase of securities for the borrowing account using the sale proceeds to fill in a long position of the client (para [0933]).

As to claims 13, 26 and 35, in the combination of De La Motte and Weinreb, De La Motte further discloses wherein the international securities comprise non-US securities (para [0313] - foreign exchange settlements).

Claims 1 - 35 have industrial applicability as defined by PCT Article 33(4) because the subject matter can be made or used in industry.

UNITED STATES PATENT AND TRADEMARK OFFICE

MAILED

NOV 05 2010

PCT LEGAL ADMINISTRATION

Commissioner for Patents
United States Patent and Trademark Office
P.O. Box 1450
Alexandria, VA 22313-1450
www.uspto.gov

Vazken Alexanian
INTERNATIONAL BUSINESS MACHINES CORPORATION
1101 Kitchawan Road
Yorktown Heights, New York 10598

In re Application of
INTERNATIONAL BUSINESS MACHINES CORPORATION
PCT No.: PCT/US2010/036985
Int. Filing Date: 02 June 2010
Priority Date: 30 April 2010
Docket No.: ARC920090019
For: POLYMERS BEARING PENDANT PENTAFLUOROPHENYL ESTER GROUPS, AND METHODS OF SYNTHESIS AND FUNCTIONALIZATION THEREOF

DECISION

ON PETITION UNDER

37 CFR 1.182

This decision is in response to applicant's "Petition to Correct International Case Under 37 C.F.R. § 1.182 Response to Invitation to Correct Defects" filed on 30 September 2010.

BACKGROUND

On 02 June 2010, applicant filed the above-identified international application with the RO/US using the USPTO EFS-Web at 10:07:55. This submission consisted of a PCT Request (7 sheets), Fee Calculation Sheet (2 sheets), a description (114 sheets), claims (7 sheets), an abstract (1 sheet), and drawings (14 sheets).

On the same day at 16:05:25, applicant submitted a "Miscellaneous Letter" consisting of a PCT Request (6 sheets), a description (106 sheets), claims (7 sheets), an abstract (1 sheet), and drawings (14 sheets).

On 04 August 2010, the RO/US mailed an Invitation to Correct Defects in the International Application (Form PCT/RO/106) noting that duplicate pages of the Request, description, claims, and abstract were received on 02 June 2010. Applicant was requested to explain why these were submitted.

On 30 September 2010, applicant filed the subject petition under 37 CFR 1.182 in response to the Form PCT/RO/106. A request to remove applicant and inventor Alshakim NELSON pursuant to PCT Rule 92*bis* and a power of attorney of applicant, International Business Machines Corporation (IBM), was also submitted.

DISCUSSION

In the subject petition, applicant requests that the second supplied specification claims, and abstract submitted on 02 June 2010 be accepted instead of the first.

Applicant explains that "after filing, it was realized the chemical formulas on certain pages (e.g., p. 50 and 55, and others) were corrupt and had printed erroneously." Applicant also claims that the "text of this second application is the same as the first except that the formulas have corrected."

The $400.00 petition fee was paid.

A review of the above-identified international application shows that there are significant differences between the earlier and later submissions of 02 June 2010. For example, the second PCT Request did not list applicant and inventor Alshakim NELSON; the page numbers of the description and claims have changed; the total number of pages in the description has changed; certain material has been added to formulas throughout the second submitted description (¶¶ 0006, 0010, 0045, etc.); and certain material have been removed from the first submitted description (Pages 16, 50, 55, 56, 59, etc.). These changes are significant.

Accordingly, applicant's request cannot be granted.

The second submission (142 sheets) will become part of the subject application. Additional sheet fees of $15.00 per sheet will apply to the second submission.

With regards to applicant's request to remove applicant and inventor Alshakim NELSON, under PCT Rule *92bis*, a request to record a change in status of any applicant must be signed by all applicants, or their legal representatives.

In this case, a power of attorney signed by Lynne D. Anderson, for applicant IBM was submitted in the application. However, there is no power of attorney present for any of the other applicant and inventors. This is required.

As such, applicant's request to remove applicant and inventor Alshakim NELSON is not accepted.

DECISION

Applicant's petition under 37 CFR 1.182 is **DISMISSED**.

This application is being returned to the RO/US for further processing in accordance with this decision.

A copy of this decision will be forwarded to the IB.

James Thomson
Attorney Advisor
Office of PCT Legal Administration

Tel.: (571) 272-3302

cc: The International Bureau of WIPO
34, chemin des Colombettes
1211 Geneva 20
Switzerland

UNITED STATES PATENT AND TRADEMARK OFFICE

Commissioner for Patents
United States Patent and Trademark Office
P.O. Box 1450
Alexandria, VA 22313-1450
www.uspto.gov

Jane M. Love
Wilmer Cutler Pickering Hale and Dorr LLP
399 Park Avenue
New York, NY 10022

MAILED

JAN 18 2011

PCT LEGAL ADMINISTRATION

In re Application of: THE TRUSTEES OF COLUMBIA UNIVERSITY IN THE CITY OF NEW YORK	:	PETITION
PCT Application No.: PCT/US2010/040220	:	
International Filing Date: 28 June 2010	:	UNDER
Priority Date: 26 June 2009	:	
Attorney's Docket No.: 0019240.00842WO1	:	
For: PHOTOLABILE COMPOUNDS	:	37 CFR 1.181

This decision is in response to applicants' "REQUEST FOR A CORRECTED PCT INTERNATIONAL SEARCH REPORT AND INTERNATIONAL WRITTEN OPINION" filed 24 September 2010, which has been treated as a petition under 37 C.F.R. 1.181. No petition fee is required.

BACKGROUND

On 30 August 2010, the United States International Searching Authority (ISA/US) issued a Notification of Transmittal of the International Search Report and the Written Opinion of the International Searching Authority, or the Declaration (form PCT/ISA/220), International Search Report (form PCT/ISA/210), and Written Opinion of the International Searching Authority (form PCT/ISA/237).

On 24 September 2010, applicants filed the present petition requesting that a revised International Search Report and Written Opinion be issued with "The Trustees of Columbia University in the City of New York" as the correct name of the applicant. Further, the applicants contend that the ISA/US did not mention nor explain whether claims 67-69 were deemed inventive in Box No. V of the Written Opinion.

DISCUSSION

A review of the file reveals that the forms PCT/ISA/220, PCT/ISA/210, and PCT/ISA/237 contain misspelled name of the applicant. Further, regarding claims 67-69, Statement section of Box No. V of the Written Opinion failed to mention claims 67-69 with

respect to inventive step. However, Citations and explanation section of Box No. V includes the indication that claims 67-69 lack an inventive step.

CONCLUSION

For the reasons given above, the applicants' petition under 37 CFR 1.181 is **GRANTED**.

Corrected Notification of Transmittal of the International Search Report and the Written Opinion of the International Searching Authority, or the Declaration (form PCT/ISA/220), International Search Report (form PCT/ISA/210), and Written Opinion of the International Searching Authority (form PCT/ISA/237) are attached to this decision. A copy of this decision is being forwarded to the IB.

Bryan Lin
PCT Legal Examiner
Office of PCT Legal Administration

Harry C. Kim
PCT Special Programs Examiner
Office of PCT Legal Administration
Telephone: (571) 272-3285

ATTACHMENT: Corrected Notification of Transmittal of the International Search Report and the Written Opinion of the International Searching Authority, or the Declaration (form PCT/ISA/220), International Search Report (form PCT/ISA/210), and Written Opinion of the International Searching Authority (form PCT/ISA/237)

CORRECTED

PATENT COOPERATION TREATY

From the INTERNATIONAL SEARCHING AUTHORITY

To:
JANE M. LOVE
WILMER CUTLER PICKERING HALE AND DORR LLP
399 PARK AVENUE
NEW YORK, NY 10022

PCT

NOTIFICATION OF TRANSMITTAL OF THE INTERNATIONAL SEARCH REPORT AND THE WRITTEN OPINION OF THE INTERNATIONAL SEARCHING AUTHORITY, OR THE DECLARATION

(PCT Rule 44.1)

	Date of mailing *(day/month/year)* 18 JAN 2011
Applicant's or agent's file reference 0019240.00842WO1	**FOR FURTHER ACTION** See paragraphs 1 and 4 below
International application No. PCT/US 10/40220	International filing date *(day/month/year)* 28 June 2010 (28.06.2010)
Applicant THE TRUSTEES OF COLUMBIA UNIVERSITY IN THE CITY OF NEW YORK	

1. ☒ The applicant is hereby notified that the international search report and the written opinion of the International Searching Authority have been established and are transmitted herewith.

   Filing of amendments and statement under Article 19:
   The applicant is entitled, if he so wishes, to amend the claims of the international application (see Rule 46):

   When? The time limit for filing such amendments is normally two months from the date of transmittal of the international search report.

   Where? Directly to the International Bureau of WIPO, 34 chemin des Colombettes 1211 Geneva 20, Switzerland, Facsimile No.: +41 22 338 8270

   For more detailed instructions, see the notes on the accompanying sheet.

2. ☐ The applicant is hereby notified that no international search report will be established and that the declaration under Article 17(2)(a) to that effect and the written opinion of the International Searching Authority are transmitted herewith.

3. ☐ **With regard to the protest** against payment of (an) additional fee(s) under Rule 40.2, the applicant is notified that:

   ☐ the protest together with the decision thereon has been transmitted to the International Bureau together with the applicant's request to forward the texts of both the protest and the decision thereon to the designated Offices.

   ☐ no decision has been made yet on the protest; the applicant will be notified as soon as a decision is made.

4. **Reminders**

   Shortly after the expiration of **18 months** from the priority date, the international application will be published by the International Bureau. If the applicant wishes to avoid or postpone publication, a notice of withdrawal of the international application, or of the priority claim, must reach the International Bureau as provided in Rules 90*bis*.1 and 90*bis*.3, respectively, before the completion of the technical preparations for international publication.

   The applicant may submit comments on an informal basis on the written opinion of the International Searching Authority to the International Bureau. The International Bureau will send a copy of such comments to all designated Offices unless an international preliminary examination report has been or is to be established. These comments would also be made available to the public but not before the expiration of 30 months from the priority date.

   Within **19 months** from the priority date, but only in respect of some designated Offices, a demand for international preliminary examination must be filed if the applicant wishes to postpone the entry into the national phase **until 30 months** from the priority date (in some Offices even later); otherwise, the applicant must, **within 20 months** from the priority date, perform the prescribed acts for entry into the national phase before those designated Offices.

   In respect of other designated Offices, the time limit of **30 months** (or later) will apply even if no demand is filed within 19 months.

   See the Annex to Form PCT/IB/301 and, for details about the applicable time limits, Office by Office, see the *PCT Applicant's Guide*, Volume II, National Chapters and the WIPO Internet site.

Name and mailing address of the ISA/US Mail Stop PCT, Attn: ISA/US Commissioner for Patents P.O. Box 1450, Alexandria, Virginia 22313-1450 Facsimile No. 571-273-3201	Authorized officer: Lee W. Young PCT Helpdesk: 571-272-4300 PCT OSP: 571-272-7774

CORRECTED

PATENT COOPERATION TREATY

PCT

INTERNATIONAL SEARCH REPORT

(PCT Article 18 and Rules 43 and 44)

Applicant's or agent's file reference 0019240.00842WO1	**FOR FURTHER ACTION**	see Form PCT/ISA/220 as well as, where applicable, item 5 below.
International application No. PCT/US 10/40220	International filing date *(day/month/year)* 28 June 2010 (28.06.2010)	(Earliest) Priority Date *(day/month/year)* 26 June 2009 (26.06.2009)
Applicant THE TRUSTEES OF COLUMBIA UNIVERSITY IN THE CITY OF NEW YORK		

This international search report has been prepared by this International Searching Authority and is transmitted to the applicant according to Article 18. A copy is being transmitted to the International Bureau.

This international search report consists of a total of 2 sheets.

☐ It is also accompanied by a copy of each prior art document cited in this report.

1. **Basis of the report**

   a. With regard to the **language**, the international search was carried out on the basis of:

   ☒ the international application in the language in which it was filed.

   ☐ a translation of the international application into _____ which is the language of a translation furnished for the purposes of international search (Rules 12.3(a) and 23.1(b)).

   b. ☐ This international search report has been established taking into account the **rectification of an obvious mistake** authorized by or notified to this Authority under Rule 91 (Rule 43.6*bis*(a)).

   c. ☐ With regard to any **nucleotide and/or amino acid sequence** disclosed in the international application, see Box No. I.

2. ☐ **Certain claims were found unsearchable** (see Box No. II).

3. ☐ **Unity of invention is lacking** (see Box No. III).

4. With regard to the **title**,

   ☒ the text is approved as submitted by the applicant.

   ☐ the text has been established by this Authority to read as follows:

5. With regard to the **abstract**,

   ☒ the text is approved as submitted by the applicant.

   ☐ the text has been established, according to Rule 38.2, by this Authority as it appears in Box No. IV. The applicant may, within one month from the date of mailing of this international search report, submit comments to this Authority.

6. With regard to the **drawings**,

   a. the figure of the **drawings** to be published with the abstract is Figure No. _____

   ☐ as suggested by the applicant.

   ☐ as selected by this Authority, because the applicant failed to suggest a figure.

   ☐ as selected by this Authority, because this figure better characterizes the invention.

   b. ☒ none of the figures is to be published with the abstract.

INTERNATIONAL SEARCH REPORT

International application No.
PCT/US 10/40220

A. CLASSIFICATION OF SUBJECT MATTER
IPC(8) - C07F 1/00 (2010.01)
USPC - 544/225
According to International Patent Classification (IPC) or to both national classification and IPC

B. FIELDS SEARCHED

Minimum documentation searched (classification system followed by classification symbols)
IPC(8): C07F 1/00 (2010.01)
USPC: 544/225

Documentation searched other than minimum documentation to the extent that such documents are included in the fields searched
IPC(8): C07D 413/00; C01G 55/00 (2010.01)
USPC: 544/225,148;423/22

Electronic data base consulted during the international search (name of data base and, where practicable, search terms used)
PubWEST; PGPB, USPT, EPAB, JPAB; GoogleScolar; Dialog
Photolabile visible light photoreleasable photorelease ligand released organic exposure to light molecule RU or rhodamine diaphoresis e

C. DOCUMENTS CONSIDERED TO BE RELEVANT

Category*	Citation of document, with indication, where appropriate, of the relevant passages	Relevant to claim No.
X -- Y	US 2008/0176940 A1 (ETCHENIQUE et al.) 24 July 2008 (24.07.2008) para[0038], para[0045], para[0047], para[0049], para[0050], para[0051], para[0061], para[0062], para[0063], para[0064], para[0113], para[0114], para[0121], para[0122], para[0143], para[0158], para[0161]	1-39, 52-55 and 60-66 ---------- 40-51, 56-59 and 67-69
Y	EP0414730 B1 (MILLS) 15 December 1999 (15.12.1999) para[0057], para[0074], para[0078]	40-51 and 56-58
Y	PubChem Iodeosin http://pubchem.ncbi.nlm.nih.gov/summary/summary.cgi?sid=458734&loc=es_rss#Synonyms (26 March 2005). Retrieved 18 August 2010	59
Y	US 6,750,357 B1 (Chiarello et al.) 15 June 2004 (15.06.2004) col 2, ln 45-60, col 3, ln 30-40, Tabel 1, compound 8	67-69

☐ Further documents are listed in the continuation of Box C. ☐

* Special categories of cited documents:
"A" document defining the general state of the art which is not considered to be of particular relevance
"E" earlier application or patent but published on or after the international filing date
"L" document which may throw doubts on priority claim(s) or which is cited to establish the publication date of another citation or other special reason (as specified)
"O" document referring to an oral disclosure, use, exhibition or other means
"P" document published prior to the international filing date but later than the priority date claimed
"T" later document published after the international filing date or priority date and not in conflict with the application but cited to understand the principle or theory underlying the invention
"X" document of particular relevance; the claimed invention cannot be considered novel or cannot be considered to involve an inventive step when the document is taken alone
"Y" document of particular relevance; the claimed invention cannot be considered to involve an inventive step when the document is combined with one or more other such documents, such combination being obvious to a person skilled in the art
"&" document member of the same patent family

Date of the actual completion of the international search	Date of mailing of the international search report
18 August 2010 (18.08.2010)	18 JAN 2011
Name and mailing address of the ISA/US Mail Stop PCT, Attn: ISA/US, Commissioner for Patents P.O. Box 1450, Alexandria, Virginia 22313-1450 Facsimile No. 571-273-3201	Authorized officer: Lee W. Young PCT Helpdesk: 571-272-4300 PCT OSP: 571-272-7774

Form PCT/ISA/210 (second sheet) (July 2009)

CORRECTED

PATENT COOPERATION TREATY

From the
INTERNATIONAL SEARCHING AUTHORITY

To: JANE M. LOVE
WILMER CUTLER PICKERING HALE AND DORR LLP
399 PARK AVENUE
NEW YORK, NY 10022

PCT

WRITTEN OPINION OF THE INTERNATIONAL SEARCHING AUTHORITY

(PCT Rule 43*bis*.1)

Date of mailing *(day/month/year)*	18 JAN 2011
Applicant's or agent's file reference 0019240.00842WO1	**FOR FURTHER ACTION** See paragraph 2 below

International application No.	International filing date *(day/month/year)*	Priority date *(day/month/year)*
PCT/US 10/40220	28 June 2010 (28.06.2010)	26 June 2009 (26.06.2009)

International Patent Classification (IPC) or both national classification and IPC
IPC(8) - C07F 1/00 (2010.01)
USPC - 544/225

Applicant THE TRUSTEES OF COLUMBIA UNIVERSITY IN THE CITY OF NEW YORK

1. This opinion contains indications relating to the following items:

- ☒ Box No. I Basis of the opinion
- ☐ Box No. II Priority
- ☐ Box No. III Non-establishment of opinion with regard to novelty, inventive step and industrial applicability
- ☐ Box No. IV Lack of unity of invention
- ☒ Box No. V Reasoned statement under Rule 43*bis*.1(a)(i) with regard to novelty, inventive step or industrial applicability; citations and explanations supporting such statement
- ☐ Box No. VI Certain documents cited
- ☐ Box No. VII Certain defects in the international application
- ☒ Box No. VIII Certain observations on the international application

2. **FURTHER ACTION**

If a demand for international preliminary examination is made, this opinion will be considered to be a written opinion of the International Preliminary Examining Authority ("IPEA") except that this does not apply where the applicant chooses an Authority other than this one to be the IPEA and the chosen IPEA has notified the International Bureau under Rule 66.1*bis*(b) that written opinions of this International Searching Authority will not be so considered.

If this opinion is, as provided above, considered to be a written opinion of the IPEA, the applicant is invited to submit to the IPEA a written reply together, where appropriate, with amendments, before the expiration of 3 months from the date of mailing of Form PCT/ISA/220 or before the expiration of 22 months from the priority date, whichever expires later.

For further options, see Form PCT/ISA/220.

3. For further details, see notes to Form PCT/ISA/220.

Name and mailing address of the ISA/US	Date of completion of this opinion	Authorized officer:
Mail Stop PCT, Attn: ISA/US Commissioner for Patents P.O. Box 1450, Alexandria, Virginia 22313-1450 Facsimile No. 571-273-3201	18 August 2010 (18.08.2010)	Lee W. Young PCT Helpdesk: 571-272-4300 PCT OSP: 571-272-7774

WRITTEN OPINION OF THE INTERNATIONAL SEARCHING AUTHORITY

International application No.
PCT/US 10/40220

Box No. I Basis of this opinion

1. With regard to the **language**, this opinion has been established on the basis of:

   ☒ the international application in the language in which it was filed.

   ☐ a translation of the international application into _____ which is the language of a translation furnished for the purposes of international search (Rules 12.3(a) and 23.1(b)).

2. ☐ This opinion has been established taking into account the **rectification of an obvious mistake** authorized by or notified to this Authority under Rule 91 (Rule 43*bis*.1(a))

3. With regard to any **nucleotide and/or amino acid sequence** disclosed in the international application, this opinion has been established on the basis of a sequence listing filed or furnished:

   a. (means)

      ☐ on paper

      ☐ in electronic form

   b. (time)

      ☐ in the international application as filed

      ☐ together with the international application in electronic form

      ☐ subsequently to this Authority for the purposes of search

4. ☐ In addition, in the case that more than one version or copy of a sequence listing has been filed or furnished, the required statements that the information in the subsequent or additional copies is identical to that in the application as filed or does not go beyond the application as filed, as appropriate, were furnished.

5. Additional comments:

WRITTEN OPINION OF THE
INTERNATIONAL SEARCHING AUTHORITY

International application No.
PCT/US 10/40220

Box No. V **Reasoned statement under Rule 43*bis*.1(a)(i) with regard to novelty, inventive step or industrial applicability; citations and explanations supporting such statement**

1. Statement

Novelty (N)	Claims	1-69	YES
	Claims	NONE	NO
Inventive step (IS)	Claims	NONE	YES
	Claims	1-69	NO
Industrial applicability (IA)	Claims	1-69	YES
	Claims	NONE	NO

2. Citations and explanations:

Claims 1-39, 52-55 and 60-66 lack an inventive step under PCT Article 33(3) as being obvious over US 2008/0176940 A1 to Etchenique et al. (hereinafter ' Etchenique').

Regarding claim 1, Etchenique teaches the compound of formula V (para[0038]; such that one of the referenced R1/R2 and R3/R4 and R5/R6 and R7/R8 are H) wherein L1 is is 4-aminopyridine (para[0049]), L2 is L1 (para[0050]) and R1-R4 are H (para[0051]).

Etchenique does not teach a particular species as claimed such as wherein one of the referenced R1/R2 and R3/R4 and R5/R6 and R7/R8 are H. However, such would have been obvious to one of ordinary skill in the art since the reference teaches that each variable moiety is a preferred species and that the compound comprising such preferred species has a therapeutic use (Abstract).

Etchenique teaches a representative moiety (I.e. H) for each of the variables in the instant claims (I.e. R1), for example wherein R1 is H. Etchenique does not however point to a specific example wherein each of the moieties are chosen and combined as claimed. However, such would have been obvious to one of ordinary skill in the art since the reference teaches that each moiety is a preferred group and that the compound comprising such preferred groups has a therapeutic use (Abstract).

Regarding claim 2, as in claim 1, Etchenique teaches wherein the organic molecule is L I is 4-aminopyridine (para[0049]/para[0114]).

Regarding claim 3, as in claim 1, Etchenique teaches wherein the organic molecule is (RS)-(tetrazol-S-yl) glycine (para[0114]).

Regarding claim 4, as in claim 1, Etchenique teaches wherein the organic molecule is (tetrazol-S-yl) AMP A (para[0114]).

Regarding claim 5, as in claim 1, Etchenique teaches wherein the organic molecule is nicotine or caffeine (para[0114]).

Regarding claim 6, as in claim 1, Etchenique teaches wherein the organic molecule is serotonin, epinephrine, norepinephrine, or dopamine (para[0114]).

Regarding claim 7, as in claim 1, Etchenique teaches wherein the organic molecule is adenosine 5' -diphosphate ADP, adenosine 5'-triphosphate ATP, adenosine 5'-monophosphate AMP, cyclic adenosine 5'-diphosphate ribose, or adenosine 3', 5'-cyclic monophosphate (para[0114]).

Regarding claim 8, as in claim 1, Etchenique teaches wherein the organic molecule is aminobutyric acid (para[0114]).

Regarding claim 9, Etchenique teaches a method for releasing an organic molecule from a Photolabile Compound, comprising: exposing a compound of claim 1 to light under conditions sufficient to release the organic molecule (para[0064]).

Regarding claim 10, as in claim 9, Etchenique teaches wherein the light comprises a wavelength of about 300 to about 500 nm (para[0121]).

----------continued in Supplemental Box----------

WRITTEN OPINION OF THE
INTERNATIONAL SEARCHING AUTHORITY

International application No.
PCT/US 10/40220

Box No. VIII Certain observations on the international application

The following observations on the clarity of the claims, description, and drawings or on the question whether the claims are fully supported by the description, are made:

Regarding claim 56, it is hereby noted that the element of a 'fluorescent molecule ' has no antecedent basis in claim 55. However, for purposes of this analysis, the 'fluorescent molecule' will be considered as somehow complexed with the compound of claim 55.

WRITTEN OPINION OF THE
INTERNATIONAL SEARCHING AUTHORITY

International application No.
PCT/US 10/40220

Supplemental Box

In case **the space in any of the preceding boxes is not sufficient.**
Continuation of:
Box V.2. Citations and explanations:

Regarding claim 11, as in claim 9, Etchenique teaches wherein the light comprises a wavelength of about 300 to about 360 nm (para[0121]).

Regarding claim 12, as in claim 9, Etchenique teaches wherein the light comprises a wavelength of about 450 to about 500 nm (para[0121]).

Regarding claim 13, as in claim 9, Etchenique teaches wherein L2 is L1 (para[0050]).

Regarding claim 14, as in claim 9, Etchenique teaches wherein the light comprises visible light or infrared light (para[0122]).

Regarding claim 15, as in claim 9, Etchenique teaches wherein the exposing occurs at a temperature from about O.C to about 150.C (para[0134]).

Regarding claim 16, Etchenique teaches a method for making an organic molecule bioavailable to a subject, comprising:
(a) administering a compound of claim 1 to the subject; and
(b) exposing the compound to light under conditions sufficient to release the organic molecule from the compound, wherein the organic molecule has a 5-membered monocyclic aromatic ring, one of the ring's members being a nitrogen atom that forms a bond with Ru for example (para[0145]-para[0156]).

Regarding claim 17, as in claim 16, Etchenique teaches wherein the light is sunlight for example (para[0121]).

Regarding claim 18, as in claim 16, Etchenique teaches wherein the light is visible light or infrared light (para[0121]).

Regarding claim 19, as in claim 16, Etchenique teaches wherein the exposing occurs at the site of a tumor, cancer, or neoplasm (para[0158]).

Regarding claim 20, as in claim 16, Etchenique teaches wherein the exposing occurs at the site of a blood dyscrasia (para[0173]; such as for leukemia).

Regarding claim 21, as in claim 16, Etchenique teaches wherein the administering occurs intravenously for example (para[0161]).

Regarding claim 22, as in claim 16, Etchenique teaches wherein the administering is via a transdermal patch (para[0161]).

Regarding claim 23, Etchenique teaches a composition comprising a compound of claim 1 and a physiologically acceptable carrier, vehicle, diluent, or excipient (para[0061]).

Regarding claim 24, Etchenique teaches a vessel containing a compound of claim 1 (para[0062]).

Regarding claim 25, as in claim 24, Etchenique teaches further containing a biological sample (para[0131]).

Regarding claim 26, as in claim 25, Etchenique teaches wherein the biological sample is an organ, tissue, cell, or hair sample (para[0131]).

Regarding claim 27, as in claim 26, Etchenique teaches wherein the tissue is neuronal tissue (para[0131]).

Regarding claim 28, as in claim 26, Etchenique teaches wherein the cell is a neuronal cell (para[0131]).

Regarding claim 29, as in claim 26, Etchenique teaches wherein the tissue or cell is a tumor, cancer, or neoplastic tissue or cell (para[0131]).

Regarding claim 30, as in claim 25, Etchenique teaches wherein the biological sample is a body fluid sample (para[0143]).

Regarding claim 31, as in claim 30, Etchenique teaches wherein the body fluid sample is blood, serum, plasma, lymph, saliva, sputum, tears, semen, or urine(para[0143]).

Regarding claim 32, Etchenique teaches a kit comprising a compound of claim 1 and instructions for use of the compound (para[0063]).

----------continued in Supplemental Box----------

WRITTEN OPINION OF THE
INTERNATIONAL SEARCHING AUTHORITY

International application No.
PCT/US 10/40220

Supplemental Box

In case **the space in any of the preceding boxes is not sufficient.**
Continuation of:
Prior Supplemental Box:

Regarding claim 33, Etchenique teaches a method of treating disorders and diseases (para[0158]) in a subject, comprising
(a) administering a therapeutically effective amount compound of claim 1 to the subject (para[0159]); and
(b) exposing the compound to light under conditions (para[0159]) sufficient to release the organic molecule from the compound, wherein the organic molecule has (i) a 5-membered monocyclic aromatic ring, one of the ring's members being a nitrogen atom that forms a bond with Ru for example (para[0055]).

Regarding claim 34, as in claim 33, Etchenique teaches wherein the disorders and diseases are neurological, neurophysiological, or neuromuscular diseases and conditions (para[0158]).

Regarding claim 35, as in claim 34, Etchenique teaches wherein the neurological, neurophysiological, or neuromuscular disease and condition is epilepsy (para[0157]).

Regarding claim 36, as in claim 34, Etchenique teaches wherein the neurological, neurophysiological, or neuromuscular disease and condition is multiple sclerosis (para[0172]).

Regarding claim 37, as in claim 34, Etchenique teaches wherein the disorder is diaphoresis (para[0172]; such that sweating is associated with many of the disease taught, such as viral infections and shock).

Regarding claim 38, as in claim 34, Etchenique teaches wherein the disease is cancer (para[0172]).

Regarding claim 39, Etchenique teaches a method for enhancing the solubility of an organic molecule (para[0167]-para[0168]), comprising complexing an organic molecule to a photolabile caging group to form a compound of claim 1; wherein exposing the compound to light under sufficient conditions releases the organic molecule from the compound (para[0115]-para[0116]), and wherein the organic molecule has a 5-membered monocyclic aromatic ring, one of the ring's members being a nitrogen atom that forms a bond with Ru for example (para[0055]).

Regarding claim 52, Etchenique teaches the compound of formula VII (para[0038]; such that one of the referenced R1/R2 and R3/R4 and R5/R6 and R7/R8 are H) wherein L1 is a 5-membered monocyclic aromatic ring, one of the ring's members being a nitrogen atom that forms a bond with Ru for example (para[0055]), L2 is P(methyl)(phenyl)2 (para[0050]; such that each referenced R2 is independently C1 alkyl or phenyl), R1-R4 are H (para[0051]), m is 2 (para[0045]) and X is Cl for example (para[0047]).

Etchenique does not teach a particular species as claimed such as wherein one of the referenced R1/R2 and R3/R4 and R5/R6 and R7/R8 are H. However, such would have been obvious to one of ordinary skill in the art since the reference teaches that each variable moiety is a preferred species and that the compound comprising such preferred species has a therapeutic use (Abstract).

Etchenique teaches a representative moiety (I.e. H) for each of the variables in the instant claims (I.e. R1), for example wherein R1 is H. Etchenique does not however point to a specific example wherein each of the moieties are chosen and combined as claimed. However, such would have been obvious to one of ordinary skill in the art since the reference teaches that each moiety is a preferred group and that the compound comprising such preferred groups has a therapeutic use (Abstract).

Regarding claim 53, as in claim 52, Etchenique teaches the compound of formula VII wherein L2 is P(methyl)(phenyl)2 (para[0050]; such that each referenced R2 is independently C1 alkyl or phenyl).

Regarding claim 54, as in claim 52, Etchenique teaches the compound of formula VII wherein L2 is P(methyl)2(phenyl) (para[0050]; such that each referenced R2 is independently C1 alkyl or phenyl).

Regarding claim 55, Etchenique teaches the compound of formula VIII (para[0038]; such that one of the referenced R1/R2 and R3/R4 and R5/R6 and R7/R8 are H) wherein L1 is is a cyclic aliphatic amine group such as 4-aminopyridine (para[0049]), L2 is CN and m is 1 (para[0050]), R1-R4 are H (para[0051]) and X is Cl for example (para[0047]).

Etchenique does not teach a particular species as claimed such as wherein one of the referenced R1/R2 and R3/R4 and R5/R6 and R7/R8 are H. However, such would have been obvious to one of ordinary skill in the art since the reference teaches that each variable moiety is a preferred species and that the compound comprising such preferred species has a therapeutic use (Abstract).

Etchenique teaches a representative moiety (I.e. H) for each of the variables in the instant claims (I.e. R1), for example wherein R1 is H. Etchenique does not however point to a specific example wherein each of the moieties are chosen and combined as claimed. However, such would have been obvious to one of ordinary skill in the art since the reference teaches that each moiety is a preferred group and that the compound comprising such preferred groups has a therapeutic use (Abstract).

----------continued in Supplemental Box----------

Supplemental Box

In case **the space in any of the preceding boxes is not sufficient.**
Continuation of:
Prior Supplemental Box:

Regarding claim 60, Etchenique teaches a method for releasing a fluorescent molecule (para[0113]) from a Photolabile Compound, comprising: exposing a compound of claim 55 to light under conditions sufficient to release the molecule (para[0064]).

Regarding claim 61, as in claim 60, Etchenique teaches wherein the light comprises a wavelength of about 300 to about 500 nm (para[0121]).

Regarding claim 62, as in claim 60, Etchenique teaches wherein the light comprises a wavelength of about 300 to about 360 nm (para[0121]).

Regarding claim 63, as in claim 60, Etchenique teaches wherein the light comprises a wavelength of about 450 to about 500 nm (para[0121]).

Regarding claim 64, as in claim 60, Etchenique teaches wherein the light comprises visible light or infrared light (para[0122]).

Regarding claim 65, as in claim 60, Etchenique teaches wherein the exposing occurs at a temperature from about O.C to about 150.C (para[0134]).

Regarding claim 66, as in claim 55, Etchenique teaches wherein L2 is a labeling molecule (para[0050]; such that L2 is L1).

Claims 40-51 and 56-58 lack an inventive step under PCT Article 33(3) as being obvious over Etchenique in view of EP0414730 (Mills).

Regarding claim 40, Etchenique teaches the compound of formula VI (para[0038]; such that one of the referenced R1/R2 and R3/R4 and R5/R6 and R7/R8 are H) wherein L1 is a 5-membered monocyclic aromatic ring, one of the ring's members being a nitrogen atom that forms a bond with Ru for example (para[0055]), L2 is P(phenyl)3 (para[0050]) and R1-R4 are H (para[0051]).

Ethchenique does not specifically show that the phenyl groups are substituted.

Mills teaches a releasable compound (Abstract), comprising a (phenyl)3 group wherein at least one of the phenyls is shown as substituted at the 3 position (para[0057]).

It would have been obvious to one of ordinary skill in the art to combine the (phenyl)3 group of Mills with that of Etchenique since Etchenique teaches that L2 is L1 (para[0050]) and the organic group comprises different compounds such as phenylephrine (para[0113]) and further that organic groups comprising a -COOH group are preferable (para[0115]). Therefore, Ethchenique points to (phenyl)3 groups with -COOH substituents making the compound of Mills obvious.

Regarding claim 41, as in claim 40, Etchenique teaches the compound of formula VI wherein L2 is P(phenyl)3 (para[0050]) and Mills teaches wherein at least two phenyl groups are independently substituted at the 3 or 4 position. As combined, substitutions at the 3 or 4 position for each phenyl would have been obvious since Mills teaches substituents and the 3 position and Etchenique teaches a phenyl substituted at various positions on the ring (para[0115]; such that phenylephrine is the organic group). Therefore, that each ring was substituted at the 3 or 4 position would have been obvious to one of ordinary skill in the art depending on the position the groups were linked to the main backbone.

Regarding claim 42, as in claim 40, Etchenique teaches wherein L2 is P(phenyl)3 (para[0050]) and at least one phenyl is substituted with -(C1-C18 alkyl)-OH (para[0013]; such that phenylephrine is substituted with C2-OH and para[0106]; wherein the alkyl is branched).

Regarding claim 43, as in claim 40, Etchenique teaches wherein L2 is P(phenyl)3 (para[0050]) and at least one phenyl is substituted with -(C1-C18 alkyl)-OH (para[0013]; such that phenylephrine is substituted with C2-OH and para[0106]; wherein the alkyl is branched). Etchenique does not specifically recite wherein each phenyl is substituted. However, Mills teaches a process for substituting each phenyl (para[0182]-para[0183]). Therefore, substituting each phenyl with -COOH would have been obvious given the teaching in Mills.

Regarding claim 44, as in claim 40, Etchenique teaches wherein L2 is P(phenyl)3 para[0050]) and Mills teaches wherein at least one phenyl is substituted with -COOH (para[0057]).

Regarding claim 45, as in claim 40, Etchenique teaches wherein L2 is P(phenyl)3 para[0050]) and Mills teaches wherein at least one phenyl is substituted with -COOH (para[0057]) and wherein each phenyl is substituted in general (para[0182]-para[0183]). Therefore, substituting each phenyl with -COOH would have been obvious given the teaching in Mills.

Regarding claim 46, as in claim 40, Etchenique teaches wherein L2 is P(phenyl)3 (para[0050]) and at least one phenyl is substituted with -OH (para[0013]; such that phenylephrine is substituted with OH and para[0106]).

----------continued in Supplemental Box----------

WRITTEN OPINION OF THE
INTERNATIONAL SEARCHING AUTHORITY

International application No.
PCT/US 10/40220

Supplemental Box

In case **the space in any of the preceding boxes is not sufficient.**
Continuation of:
Prior Supplemental Box:

Regarding claim 47, as in claim 40, Etchenique teaches wherein L2 is P(phenyl)3 para[0050]) and Mills teaches wherein at least one phenyl is substituted with -OH (para[0057]) and wherein each phenyl is substituted in general (para[0182]-para[0183]). Therefore, substituting each phenyl with -OH would have been obvious given the teaching in Mills.

Regarding claim 48, as in claim 40, Etchenique teaches wherein L2 is P(phenyl)3 para[0050]) and at least one phenyl is substituted with -NH2 (para[0115]; such that organic groups with NH2 groups are preferred and further that organic groups such as rhodamine (para[0113]) have NH2 substitutents).

Regarding claim 49, as in claim 40, Etchenique teaches wherein L2 is P(phenyl)3 para[0050]) and at least one phenyl is substituted with -NH2 (para[0115]; such that organic groups with NH2 groups are preferred and further that organic groups such as rhodamine (para[0113]) have NH2 substitutents) and Mills teaches a method for substituting each phenyl group (para[0182]-para[0183]) thereby making obvious wherein each phenyl is substituted with-NH2 .

Regarding claim 50, as in claim 40, Etchenique teaches wherein L2 is P(phenyl)3 para[0050]) and Mills teaches wherein at least one phenyl is substituted with -N02 (para[0074]).

Regarding claim 51, as in claim 40, Etchenique teaches wherein L2 is P(phenyl)3 para[0050]) and and Mills teaches wherein at least one phenyl is substituted with -N02 (para[0074]) and a method of substituting each phenyl group (para[0182]-para[0183]) thereby making obvious wherein each phenyl is substituted with-N02.

Regarding claim 56, as in claim 55, Etchenique teaches the compound of claim 55 but makes no mention of a fluorescent molecule. It is hereby noted that the element of a 'fluorescent molecule ' has no antecedent basis in claim 55. However, for purposes of this analysis, the 'fluorescent molecule' will be considered as somehow complexed with the compound of claim 55. To that end, Etchenique does not teach wherein the fluorescent molecule contains a -CN group whose nitrogen atom forms a bond with Ru.

Mills teaches wherein releasing groups are complexed via a CN group (para[0078]).

It would have been obvious to one of ordinary skill in the art to combine the CN group of Mills with the compound of Etchenique since both references teach a (phenyl)3 groups. Since both references teach structurally and functionally similar compounds one of ordinary skill in the art would have found it obvious to use the CN linking group of Mills with the compound of Etchenique.

Regarding claim 57, as in claim 55, Etchenique teaches wherein the fluorescent molecule contains rhodamine (para[0113]).

Regarding claim 58, as in claim 55, Etchenique teaches wherein the fluorescent molecule contains fluorescein (para[0113]).

Claim 59 lacks an inventive step under PCT Article 33(3) as being obvious over Etchenique in view of Pubchem Iodeosin http://pubchem.ncbi.nlm.nih.gov/summary/summary.cgi?sid=458734&loc=es_rss#Synonyms (hereinafter 'PubChem').

Regarding claim 59, as in claim 55, Etchenique teaches wherein the compound comprises a fluorescent molecule (para[0113]) but does not teach wherein the fluorescent molecule contains iodeosin.

PubChem teaches the fluorescent molecule iodeosin (See structure).

It would have been obvious to one of ordinary skill in the art to combine the iodesoin of PubChem with the structure of Ethchenique since Ethchenique teaches fluorescent structures in general and structures such as fluorescein and iodesoin is a derivative of fluorescein.

----------continued in Supplemental Box----------

WRITTEN OPINION OF THE
INTERNATIONAL SEARCHING AUTHORITY

International application No.
PCT/US 10/40220

Supplemental Box

In case **the space in any of the preceding boxes is not sufficient.**
Continuation of:
Prior Supplemental Box:

Claims 67-69 lack an inventive step under PCT Article 33(3) as being obvious over Etchenique in view of US 6,750,357 B1 to Chiarello et al. (hereinafter 'Chiarello').

Regarding claim 67, as in claim 66, Ethchenique teaches the compound of claim 66 and the Ru(bpy)2 group (para[0074]) and further teaches that the compound is linked to a fluorescent group (para[0113]). However, Ethchenique does not teach a group comprising Rhod6G-MAMePy as per para[0045] of the instant Specification.

Chiarello teaches Rhod6G-MAMePy (col 2, ln 45-60; such that the Chiarello Ra/Ra' of the compound is alkylaryl in col 3, ln 30-40 and that the end ring group is also shown as a heteroaryl in Table 1, compound 8).

It would have been obvious to one of ordinary skill in the art to combine the Chiarello reference with that of Ethchenique since both teach fluorescent pharmaceuticals. Moreover, Ethchenique teaches the use of a bound rhodamine compound (para[0113]) which would create an expectation of success by using/combining the rhodamine compound to the backbone Ru compound making obvious the compound Ru(bpy)2(Rhod6G-MAMePy).

Regarding claims 68-69, Ethchenique teaches the compound (para[0038]) and the Ru(bpy)2 group (para[0074]) and further teaches that the compound is linked to a fluorescent group (para[0113]). However, Ethchenique does not teach a group comprising Rhod6G-MAMePy as per para[0045] of the instant Specification.

Chiarello teaches Rhod6G-MAMePy (col 2, ln 45-60; such that the Chiarello Ra/Ra' of the compound is alkylaryl in col 3, ln 30-40 and that the end ring group is also shown as a heteroaryl in Table 1, compound 8).

It would have been obvious to one of ordinary skill in the art to combine the Chiarello reference with that of Ethchenique since both teach fluorescent pharmaceuticals. Moreover, Ethchenique teaches the use of a bound rhodamine compound (para[0113]) which would create an expectation of success by using/combining the rhodamine compound to the backbone Ru compound making obvious the compound [Ru(bpy)2(RhodB-MAMePy)Cl] wherein the ion is Cl.h citations.

Claims 1- 69 have industrial applicability as defined by PCT Article 33(4) because the subject matter can be made or used in industry.

UNITED STATES PATENT AND TRADEMARK OFFICE

Commissioner for Patents
United States Patent and Trademark Office
P.O. Box 1450
Alexandria, VA 22313-1450
www.uspto.gov

Anne J. Collins
HAMILTON, BROOK, SMITH & REYNOLDS, P.C.
530 Virginia Road
P. O. Box 9133
Concord, MA 01742-9133

MAILED

DEC 14 2010

PCT LEGAL ADMINISTRATION

In re Application of: CHEN, QINGFENG	:	PETITION
PCT Application No.: PCT/US2010/040260	:	
International Filing Date: 28 June 2010	:	
Priority Date: 29 June 2009	:	UNDER
Attorney's Docket No.: 4471.1001002	:	
For: METHODS OF PRODUCING HUMANIZED	:	
NON-HUMAN MAMMALS	:	37 CFR 1.181

This decision is in response to applicants' request filed 07 October 2010, which has been treated as a petition under 37 C.F.R. 1.181. No petition fee is required.

BACKGROUND

On 14 September 2010, the United States International Searching Authority (ISA/US) issued Notification of Transmittal of the International Search Report and the Written Opinion of the International Searching Authority, or the Declaration (form PCT/ISA/220), International Search Report (form PCT/ISA/210), and Written Opinion of the International Searching Authority (form PCT/ISA/237) indicating thereon "KESKOV, ILYA B." as the applicant.

On 07 October 2010, applicants filed the present petition requesting the ISA/US to reissue the forms PCT/ISA/220, 210 & 237 reflecting the changed name of the applicant.

DISCUSSION

A review of the file reveals that the ISA/US received a Notification of the Recording of a Change (form PCT/IB/306) from the International Bureau (IB) on 10 August 2010. The notification clearly indicated CHEN, Qingfeng and CHEN, Jianzhu as the sole applicants and inventors for the instant international application. Consequently, the forms PCT/ISA/220, PCT/ISA/210, and PCT/ISA/237 should have contained thereon the first named applicant "CHEN, Qingfeng" as the applicant.

CONCLUSION

For the reasons given above, the applicants' petition under 37 CFR 1.181 is **GRANTED**.

Corrected Notification of Transmittal of the International Search Report and the Written Opinion of the International Searching Authority, or the Declaration (form PCT/ISA/220), International Search Report (form PCT/ISA/210), and Written Opinion of the International Searching Authority (form PCT/ISA/237) are attached to this decision. A copy of this decision is being forwarded to the IB.

Richard Cole
PCT Legal Examiner
Office of PCT Legal Administration

Harry C. Kim
PCT Special Programs Examiner
Office of PCT Legal Administration
Telephone: (571) 272-3285

ATTACHMENT: Corrected Notification of Transmittal of the International Search Report and the Written Opinion of the International Searching Authority, or the Declaration (form PCT/ISA/220), International Search Report (form PCT/ISA/210), and Written Opinion of the International Searching Authority (form PCT/ISA/237)

UNITED STATES PATENT AND TRADEMARK OFFICE

24 SEP 2010

COMMISSIONER FOR PATENTS
UNITED STATES PATENT AND TRADEMARK OFFICE
P.O. BOX 1450
ALEXANDRIA, VA 22313-1450
www.uspto.gov

James Lowe
15417 W. National Ave. #300
New Berlin, WI 53151

In re Application of :
Sanderson Engine Development Co., LLC :
PCT No.: PCT/US10/42840 :
Int. Filing Date: 22 July 2010 :
Priority Date: 26 July 2009 : DECISION
Atty. Docket No.: 41302 :
For: A SUPERCHARGED INTERNAL COMBUSTION ENGINE INCLUDING A PRESSURIZED... :

This is a decision on applicant's "PRELIMINARY AMENDMENT" filed in the U.S. Patent and Trademark Office (USPTO) on 22 July 2010.

BACKGROUND

On 22 July 2010, applicant filed international application No. PCT/US10/42840 which claimed a priority date of 26 July 2009, and which designated the United States.

Also on 22 July 2010, applicant filed the present "PRELIMINARY AMENDMENT" in the form of a substitute specification and a substitute abstract. The submission requests that the substitute specification and a substitute abstract replace the originally filed specification and abstract.

DISCUSSION

There is no provision for amendment of the international application under Chapter I of the PCT. As such, applicant's request to substitute the later set of application papers for the first filed set cannot be granted as a mere matter of course. Under normal PCT processing the second set of papers would be processed as later filed sheets and both sets of application papers would be combined to comprise the specification and abstract of the present application.

However, a cursory review of the substitute specification and the substitute abstract reveals that they are largely duplicative of the originally filed specification and abstract. Assuming that the differences comprise only additions to the originally filed specification and abstract, applicant

may wish to consider filing a petition under 37 CFR 1.182 requesting that the substitute specification and substitute abstract be accepted in lieu of the originally filed specification and abstract under PCT Rule 9.1(iv). Such a petition should be accompanied by the requisite petition fee and include a statement setting forth the exact nature of the differences between the two specifications and abstracts. The above should not be construed as an indication that any such petition will be granted, merely that it will be considered.

CONCLUSION

For the reasons above, entry of the preliminary amendment as a substitute submission is **REFUSED** without prejudice.

A proper response to this decision must be filed within TWO (2) MONTHS from the mail date of this decision. Any response should include a cover letter entitled "Petition Under 37 CFR 1.182."

If such a petition is not filed within the above time limit, the application will be processed with both sets of application papers with the second set being considered later filed sheets.

Any further correspondence with respect to this matter may be filed electronically via EFS-Web selecting the document description "Petition for review and processing by the PCT Legal Office" or by mail addressed to Mail Stop PCT, Commissioner for Patents, Office of PCT Legal Administration, P.O. Box 1450, Alexandria, Virginia 22313-1450, with the contents of the letter marked to the attention of the Office of PCT Legal Administration.

Richard R. Cole
Senior PCT Legal Examiner
Office of PCT Legal Administration

(571) 272-3281

UNITED STATES PATENT AND TRADEMARK OFFICE

COMMISSIONER FOR PATENTS
UNITED STATES PATENT AND TRADEMARK OFFICE
P.O. BOX 1450
ALEXANDRIA, VA 22313-1450
www.uspto.gov

James Lowe
15417 W. National Ave. #300
New Berlin, WI 53151

MAILED

DEC 30 2010

PCT LEGAL ADMINISTRATION

In re Application of :
Sanderson Engine Development Co., LLC :
PCT No.: PCT/US10/42840 :
Int. Filing Date: 22 July 2010 :
Priority Date: 26 July 2009 :
Atty. Docket No.: 41302 :
For: A SUPERCHARGED INTERNAL COMBUSTION ENGINE INCLUDING A PRESSURIZED... :

DECISION

This is a decision on applicant's "PETITION UNDER 37 CFR 1.182" filed in the U.S. Patent and Trademark Office (USPTO) on 23 November 2010, which requests that the second set of application papers (specification and abstract) filed 22 July 2010, be substituted for the first set of papers filed on the same date. The petition is **GRANTED**. The requisite petition fee has been paid.

In that the second set of specification and abstract are largely duplicative of the originally filed specification and abstract, they are accepted in lieu of the originally filed specification and abstract under PCT Rule 9.1(iv).

The application is being returned to the RO/US for processing in accordance with this decision including forwarding the application papers, including the second set of specification and abstract filed 22 July 2010, to the IB as the Record Copy of the present application.

Richard R. Cole
Senior PCT Legal Examiner
Office of PCT Legal Administration

(571) 272-3281

UNITED STATES PATENT AND TRADEMARK OFFICE

COMMISSIONER FOR PATENTS
UNITED STATES PATENT AND TRADEMARK OFFICE
P.O. BOX 1450
ALEXANDRIA, VA 22313-1450
www.uspto.gov

MAILED

DEC 22 2010

PCT LEGAL ADMINISTRATION

William F. Prout, Ph.D.
Prout International IP, LLC
P.O. Box 761
Wayzata, MN 55391

In re Application of UNIV. OF VIRGINIA PATENT FOUNDATION
PCT Application No.: PCT/US2010/042978
Int. Filing Date: 23 July 2010
Priority Date Claimed: 22 July 2009
Attorney Docket No.: 198P01674WO01
For: LUMINESCENT DIKETONATE POLYMERS

DECISION

This is in response to applicant's petition under 37 CFR 1.182 filed 30 November 2010.

BACKGROUND

On 23 July 2010, applicant filed international application papers with the United States Receiving Office (RO/US) via the EFS-Web electronic filing system of the USPTO. The submission was assigned the above-identified International Application Number and International Filing Date.

On 29 July 2010, the RO/US mailed a Notification of the International Application Number and of the International Filing Date.

On 30 November 2010, applicant filed the present petition under 37 CFR 1.182.

DISCUSSION

The petition requests that the International Filing Date be changed from 23 July 2010 to 22 July 2010. The petition states that applicant attempted to file the international application papers on 22 July 2010 but was unable to complete the submission due to a purported EFS-Web system malfunction or delay.

The EFS-Web Legal Framework (74 Fed. Reg. 55200, October 27, 2009), Section C, states in relevant part,

> The Electronic Acknowledgement Receipt establishes the date of receipt by the USPTO of documents submitted via EFS-Web.
>
> * * *
>
> [T]he submission's "date of receipt," as shown on the Electronic Acknowledgement Receipt, is the Eastern Standard Time date that the documents are fully, successfully, and officially received at the USPTO, after the user clicks the SUBMIT button on the Confirm and Submit screen. See 37 CFR 1.6(a)(4).
>
> * * *
>
> To be very specific, the EFS-Web system records as the date of receipt of documents the local date in Eastern Standard Time on which the USPTO receives the documents, after the user clicks the SUBMIT button on the Confirm and Submit screen for those documents.
>
> * * *
>
> Users are strongly advised to transmit their electronic filings sufficiently early in the day to allow time for alternative paper filing when transmission cannot be initiated or correctly completed.

In the present case, the Electronic Acknowledgement Receipt indicates that the international application papers were received by the Office on 23 July 2010. The petition does not contain any evidence that the papers were received by the Office on 22 July 2010. Even assuming *arguendo* that the EFS-Web system was experiencing downtime at the time applicant attempted a submission, such purported downtime does not discharge applicant from the responsibility of timely filing papers with the Office. As specifically cautioned in the EFS-Web Legal Framework, an applicant who does not allow time for alternative filing means bears the risk of not being able to complete the EFS-Web transmission in a timely manner. Accordingly, a change in the International Filing Date is not indicated in the present situation.

A requested in the petition, the present correspondence will be alternatively treated as a request for the restoration of a right of priority. A decision on such request is attached to this letter.

CONCLUSION

For the reasons above, the petition under 37 CFR 1.182 is DISMISSED without prejudice.

If reconsideration on the merits of the petition is desired, a proper response must be filed within TWO (2) MONTHS from the mail date of this decision. Any reconsideration request should include a cover letter entitled "Renewed Petition Under 37 CFR 1.182". No additional petition fee is required.

Any further correspondence with respect to this matter may be filed electronically via EFS-Web selecting the document description "Petition for review and processing by the PCT Legal Office" or by mail addressed to Mail Stop PCT, Commissioner for Patents, Office of PCT Legal Administration, P.O. Box 1450, Alexandria, Virginia 22313-1450, with the contents of the letter marked to the attention of the Office of PCT Legal Administration.

Bryan Lin
PCT Legal Examiner
PCT Legal Office

Telephone: 571-272-3303
Facsimile: 571-273-0459

ATTACHMENT: Notification of Decision on Request to Restore Right of Priority (Form PCT/RO/159)

- 1 OCT 2010

UNITED STATES PATENT AND TRADEMARK OFFICE

Commissioner for Patents
United States Patent and Trademark Office
P.O. Box 1450
Alexandria, VA 22313-1450
www.uspto.gov

CHARLES P. LANDRUM
FULBRIGHT & JAWORSKI L.L.P.
600 CONGRESS AVE., SUITE 2400
AUSTIN TX TEXAS 78701

In re Application of	:	
ACCORDA THERAPEUTICS, INC.	:	
PCT No.: PCT/US10/47743	:	
Int. Filing Date: 02 September 2010	:	DECISION ON REQUEST
Attorney Docket No.: ACOR.P0206WO	:	
For: SUSTAINED RELEASE FAMPRIDINE TREATMENT IN PATIENTS WITH MULTIPLE SCLEROSIS	:	

This is a decision on the Request to Withdraw International Application filed 24 September 2010 with the United States Receiving Office (RO/US) in the above referenced application. Applicant requests that international application PCT/US10/47743 be withdrawn.

BACKGROUND

On 02 September 2010, applicant submitted a PCT Request along a description, claims, drawings and abstract. The application was assigned application number PCT/US10/47743. Fees were paid in this application..

On 20 September 2010, applicant, through his agent, filed a request for withdrawal of PCT Application PCT/US10/47743 in accordance with PCT Rule 90*bis*.1 with the United States Receiving Office. The request also asked for refund of fees. The request to withdraw the application was not made on condition that publication of the application be prevented.

DISCUSSION

With regard to applicant's request to withdraw application PCT/US10/47743, applicant may withdraw the international application by a notice addressed to the International Bureau or to the Receiving Office. *See* PCT Rule 90*bis*.1. However, the notice must be signed by all the applicants. *See* PCT Rule 90.*bis*.5. The notice may be signed by the agent appointed by all applicants to represent him before the Receiving Office or International Bureau.[1] Here, all applicants did not sign the request to withdraw PCT/US10/47743 and there is no Power of

[1] Where an Office or Authority has waived the requirement that a separate power of attorney, or a copy of a general power of attorney, has to be furnished, the waiver does not apply in respect of any notice of withdrawal.

Attorney appointing the agent on behalf of the applicants in this application file. Even where one of the applicants is considered the common representative under Rule 90.2(b), the notice of withdrawal must be signed by all the applicants.

The request to withdraw PCT/US10/47743 is signed by Charles P. Landrum. However, there is no Power of Attorney in the file appointing Mr. Landrum as the agent on behalf of all the applicants, in compliance with PCT Rule 90.1. Such Power of Attorney must be signed by all applicants. Without a Power of Attorney on behalf of all applicants, all of the applicants are required to sign the withdrawal of international application PCT/US10/47743.

Pursuant to PCT Rule 90*bis*.5, without the signatures of applicant/inventors, the withdrawal of the international application no. PCT/US10/47743 is REFUSED because the request to withdraw is not signed by all of the applicants as required.

DECISION

As construed above, the petition to withdraw the international application PCT/US10/47743 is **DISMISSED WITHOUT PREJUDICE**.

The request for refund of fees is **DISMISSED WITHOUT PREJUDICE.**

/Cynthia M. Kratz/
Cynthia M. Kratz
Attorney Advisor
PCT Legal Office
Office of PCT Legal Administration

Telephone: (571) 272-3286
Facsimile: (571) 273-0459

UNITED STATES PATENT AND TRADEMARK OFFICE

Commissioner for Patents
United States Patent and Trademark Office
P.O. Box 1450
Alexandria, VA 22313-1450
www.uspto.gov

MAILED

APR 12 2011

PCT LEGAL ADMINISTRATION

ANNA LYNNE HEINKEL
c/o MOLECULAR NANOSYSTEMS, INC.
977 COMMERCIAL STREET
PALO ALTO CA 94303

In re Application of :
MOLECULAR NANOSYSTEMS :
PCT No.: PCT/US2010/047900 :
Int. Filing Date: 03 September 2010 :
Priority Date: 03 September 2009 :
Docket No.: MN.0021.K1.PCT : DECISION
For: METHODS AND SYSTEMS FOR MAKING ELECTRODES HAVING AT LEAST ONE FUNCTIONAL GRADIENT THEREIN AND DEVICES ARISING THEREFROM :

This is a decision on applicants' Petition to Revive Under 37 CFR 1.137(b), filed in the above-captioned application on 03 February 2011.

International Application PCT/US2010/047900 is not abandoned. Failure to timely respond to the Invitation to Correct Defects (Form PCT/DO/EO/106) does not result in abandonment, although it can result in the application being withdrawn. This international application is pending.

For the above reasons, applicants' Petition to Revive Under 37 CFR 1.137(b) is **DISMISSED AS MOOT**.

Any further correspondence with respect to this matter may be filed electronically via EFS-Web selecting the document description "Petition for review and processing by the PCT Legal Office" or by mail addressed to Mail Stop PCT, Commissioner for Patents, Office of PCT Legal Administration, P.O. Box 1450, Alexandria, Virginia 22313-1450, with the contents of the letter marked to the attention of the Office of PCT Legal Administration.

/Erin P. Thomson/

Erin P. Thomson
Attorney Advisor
PCT Legal Administration

Telephone: 571-272-3292

UNITED STATES PATENT AND TRADEMARK OFFICE

Commissioner for Patents
United States Patent and Trademark Office
P.O. Box 1450
Alexandria, VA 22313-1450
www.uspto.gov

MAILED

APR 13 2011

PCT LEGAL ADMINISTRATION

ANNA LYNNE HEINKEL
977 COMMERCIAL STREET
PALO ALTO CA CALIFORNIA 94303

In re Application of:	
MOLECULAR NANOSYSTEMS, INC.	DECISION ON PETITION FOR
PCT No.: PCT/US2010/047914	REVIVAL UNDER 37 CFR
Date of Receipt: 03 September 2010	1.137(b) AND REQUEST FOR
Claimed Priority Date: 07 October 2009	RESTORATION OF RIGHT OF
Attorney's Docket No.: MN0017K1PCT	PRIORITY
For: METHODS AND SYSTEMS FOR MAKING BATTERY ELECTRODES AND DEVICES ARISING THEREFROM	

This decision is issued in response to the "PETITION FOR REVIVAL OF AN INTERNATIONAL APPLICATION FOR PATENT DESIGNATING THE U.S. ABANDONED UNINTENTIONALLY UNDER 37 CFR 1.137(b)" and the "STATEMENT FOR RESTORATION OF THE RIGHT OF PRIORTY" filed on 23 February 2011. Applicant has paid the applicable petition fees.

BACKGROUND

On 03 September 2010, applicant initiated the present international application by filing, a PCT Request (Form PCT/RO/101) and accompanying materials.

On 30 September 2010, the United States Receiving Office (RO/US) mailed a "Notification Concerning Payment Of Prescribed Fees" (Form PCT/RO/102) indicating that $4,174 in unpaid fees were required.

On 01 October 2010, the RO/US mailed the following: (1) "Notification Of The International Application Number And Of The International Filing Date" (Form PCT/RO/105) identifying the international filing date as 03 September 2010; (2) "Invitation To Correct Defects In The International Application" (Form PCT/RO/106) noting formality defects in the international application as filed; and (3) "Invitation To Correct Priority Claim And/Or Notification Of Possibility To Request Restoration Of The Right Of Priority" (Form PCT/RO/110) stating that applicant's priority claim was defective because the priority date listed on the PCT Request (07 October 2009) was not consistent with the filing date on the priority document itself (03 September 2009).

On 10 November 2010, the RO/US mailed an "Invitation To Pay Prescribed Fees Together With Late Payment Fee" (Form PCT/RO/133) requiring submission of $4,174 in unpaid fees plus $650 in late fees.

On 06 December 2010, applicant submitted a fee payment of $4,801.50.

On 23 February 2011, applicants filed a response to the Invitation To Correct Defects In The International Application, as well as the petition for revival under 37 CFR 1.137(b) and the "Statement For Restoration Of The Right Of Priority" considered below.

On 25 February 2011, the RO/US mailed a revised "Notification Concerning Payment Of Prescribed Fees" (Form PCT/RO/102) indicating that the total fees required for the present application are $4,577 and that applicant had paid all the required fees.

On 01 March 2011, the RO/US mailed a "Notification Relating To Priority Claim" (Form PCT/RO/111) indicating that, pursuant to the request filed by applicant on 23 February 2011, the priority claim had been corrected to 03 September 2009.

DISCUSSION

1. Petition For Revival Under 37 CFR 1.137(b)

The present international application is not abandoned.[1] Accordingly, the filing of a petition for revival of the international application under 37 CFR 1.137(b) is inappropriate at the present time. The petition is therefore dismissed as moot. The $810 petition fee filed by applicant with respect to this petition will be refunded to Deposit Account No. 50-4982.

2. Request For Restoration Of The Right Of Priority

The "Statement For Restoration Of The Right Of Priority" filed by applicant on 23 February 2011 requests correction of the priority claim included in the PCT Request. Specifically, applicant requests that the filing date for the priority application be corrected from 07 October 2009 to 03 September 2009. The statement indicates that the error in the PCT Request and the failure to correct the error earlier were unintentional.

PCT Rule 26bis.3 sets forth the procedures for requesting restoration of the right of priority. However, as set forth in PCT Rule 26bis.3(a), restoration of the right of priority applies only in situations where "the international application has an international filing date which is later than the date on which the priority period expired but within the period of two months from that date." This is not the situation here, where the international filing date is not after the expiration of twelve months from the desired priority date of 03 September 2009, that is, where the international filing date is not "later than the date on which the priority period expired." The request to restore the right of priority filed by applicant is therefore inapplicable in the present circumstances and is appropriately dismissed as moot. The $1410 petition fee filed by applicant with respect to this request will be refunded to Deposit Account No. 50-4982.

---

[1] An international application becomes abandoned with respect to the United States if a national stage application is not filed prior to the expiration of thirty months from the priority date, a period which will not expire with respect to the present application until 07 April 2012. See 37 CFR 1.495(h).

3. Request To Correct Priority Claim

PCT Rule 26bis.1 is the applicable rule where, as here, the applicant seeks to correct a priority claim in an international application. Thus, the request to correct the filing date of the priority claim to 03 September 2010 filed by applicant on 23 February 2011(characterized by applicant as a request to restore the right of priority) is appropriately considered as a request under PCT Rule 26bis.1.

Pursuant to PCT Rule 26bis.1(a), a request to correct a priority claim must be submitted within 16 months of the priority date or, if the correction would change the priority date, within 16 months from the priority date as so changed, "whichever 16-month period expires first." In the present application, applicant is seeking to correct the priority date to 03 September 2009. Accordingly, the deadline to correct the priority date under PCT Rule 26bis.1 was 03 January 2011, that is, 16 months from the desired priority date. Applicant did not submit the request to correct the priority claim until 23 February 2011, after the expiration of the deadline.[2] Accordingly, applicant's 23 February 2011 request to correct the filing date for the priority claim to 03 September 2009 was not timely filed under PCT Rule 26bis. The request is therefore appropriately dismissed. The priority date of record remains 07 October 2009, as set forth by applicant in the PCT Request.

The "Notification Relating To Priority Claim" (Form PCT/RO/111) mailed 01 March 2011, which indicated that the priority date would be corrected pursuant to applicant's 23 February 2011 request, was issued in error and is hereby vacated.

4. Fee Issues

The original "Notification Concerning Payment Of Prescribed Fees" (Form PCT/RO/102) mailed on 30 September 2010 indicated that the total fees due for the present application were $4,174, itemized as follows: $240 transmittal fee, $2,080 search fee, $1,061 international filing fee, and $793 as the supplemental fee for the inclusion of 61 pages over 30 ($13 per page). In fact, the application as filed included 92 pages over 30. Accordingly, the supplemental fee required for inclusion of extra pages was $1,196, not $793, and the total fees due for the application were $4,577.

The first page of the "Invitation To Pay Prescribed Fees Together With Late Payment Fee" (Form PCT/RO/133) mailed 10 November 2010 also indicated that the total unpaid fees were $4,174. Moreover, the $650 late payment fee required by the Form PCT/RO/133 exceeded 50% of the international filing fee and therefore was in excess of the maximum late fee permissible under PCT Rule 16bis.2(b).

In view of the above, the "Notification Concerning Payment Of Prescribed Fees" (Form PCT/RO/102) mailed on 30 September 2010 and the "Invitation To Pay Prescribed Fees

---

[2] It is noted that, pursuant to PCT Rule 26bis.2(b), under some circumstances, a request to correct the priority claim filed "not later than one month after the expiration" of the 16 month deadline set forth in PCT Rule 26bis.1(a) may be "considered to have been received before the expiration of that time limit." However, applicant's 23 February 2011 request was filed more than one month after the expiration of the 16-month deadline.

Together With Late Payment Fee" (Form PCT/RO/133) mailed on 10 November 2010 both incorrectly listed the fees required herein and are therefore appropriately vacated.

It is noted that the correct fees required in the present application were listed in the revised "Notification Concerning Payment Of Prescribed Fees" (Form PCT/RO/102) mailed 25 February 2011, and this Notification also correctly indicated that applicant has paid all the required fees.

Finally, in view of the vacating of the "Invitation To Pay Prescribed Fees Together With Late Payment Fee" (Form PCT/RO/133) mailed 10 November 2010 and applicant's subsequent payment of all required fees, no late fees are required herein. The $542.50 late fee payment submitted by applicant on 06 December 2010 is therefore properly refunded to applicant.

CONCLUSION

The petition for revival under 37 CFR 1.137(b) is **DISMISSED AS MOOT**.

The request for restoration of the right of priority under PCT Rule 26bis.3 is **DISMISSED AS MOOT**.

The request under PCT Rule 26bis.1 to correct the date of the priority claim from 07 October 2009 to 03 September 2009 is **DISMISSED** without prejudice as untimely filed. The priority date of record remains 07 October 2009.

The "Notification Relating To Priority Claim" (Form PCT/RO/111) mailed 01 March 2011 which indicated that the priority date had been corrected to 03 September 2009 is hereby **VACATED**.

The Notification Concerning Payment Of Prescribed Fees" (Form PCT/RO/102) mailed on 30 September 2010 and the "Invitation To Pay Prescribed Fees Together With Late Payment Fee" (Form PCT/RO/133) mailed on 10 November 2010, both of which incorrectly listed the fees required in the present application, are hereby **VACATED**.

The following fees will be refunded to Deposit Account No. 50-4982: (1) $810 petition fee filed with respect to the petition for revival; (2) $1,410 petition fee filed with respect to the request for restoration of the right of priority; and (3) $542.50 late fee submitted in response to the vacated Form PCT/RO/133.

/RichardMRoss/

Richard M. Ross
Attorney Advisor
Office Of PCT Legal Administration
Telephone: (571) 272-3296

UNITED STATES PATENT AND TRADEMARK OFFICE

Commissioner for Patents
United States Patent and Trademark Office
P.O. Box 1450
Alexandria, VA 22313-1450
www.uspto.gov

MAILED

MAR 31 2011

PCT LEGAL ADMINISTRATION

MELISSA K. DOBSON
290 LACKAWANNA AVENUE
OWEGO NY 13827

In re Application of	:	
BAUST, J. M.	:	DECISION
PCT No.: PCT/US2010/048079	:	
Receipt Date: 08 September 2010	:	
Priority Date Claimed: 09 September 2009	:	
Attorney's Docket No.: US-PCT657	:	
For: CRYOSENSITIZING AGENTS FOR ENHANCEMENT OF CRYOABLATION	:	

This decision is in response to applicants' submission filed 08 September 2010 which includes a petition under 37 CFR 1.47 requesting that the above-captioned application be accepted without the signature of Daniel Klossner. This petition has properly been treated as a petition under 37 CFR 1.425. No petition fee is required.

BACKGROUND

On 08 September 2010, applicants filed electronically via EFS-Web, *inter alia*, a Request for a new PCT international application, fee calculation sheet, description, claims, abstract, and drawings. These papers were assigned international application number PCT/US10/48079 (the instant application). The submission filed 08 September 2010 also included a petition under 37 CFR 1.47, which has properly been treated as a petition under 37 CFR 1.425, and a Request in PCT EASY format which includes, *inter alia*, a declaration under PCT Rule 4.17(iv) including e-signatures from all of the applicants (pages 9-12).

DISCUSSION

The petition indicates that inventor Daniel Klossner either refuses to sign or cannot be located. However, the Request filed 08 September 2010 includes a declaration under PCT rule 4.17(iv) which includes Mr. Klossner's signature (page 11 of the Request). It is not clear how this declaration could include his signature if he either refuses to sign or cannot be located. Clarification is required.

It would not be appropriate to accept the international application under 37 CFR 1.425 and PCT Rule 4.15(b) at this time.

CONCLUSION

For the reasons set forth above, the petition under 37 CFR 1.425 is **DISMISSED** without prejudice.

A proper response, including clarification of the above matter, must be filed within **ONE (1) MONTH** from the mail date of this decision. Any reconsideration request should include a cover letter entitled "Renewed Petition Under 37 CFR 1.425." No additional petition fee is required.

Any further correspondence with respect to this matter may be filed electronically via EFS-Web selecting the document description "Petition for review and processing by the PCT Legal Office" or by mail addressed to Mail Stop PCT, Commissioner for Patents, Office of PCT Legal Administration, P.O. Box 1450, Alexandria, Virginia 22313-1450, with the contents of the letter marked to the attention of the Office of PCT Legal Administration.

/Daniel Stemmer/

Daniel Stemmer
PCT Legal Examiner
PCT Legal Affairs
Office of Patent Cooperation Treaty
Legal Administration
Telephone: (703) 308-2066

UNITED STATES PATENT AND TRADEMARK OFFICE

COMMISSIONER FOR PATENTS
UNITED STATES PATENT AND TRADEMARK OFFICE
P.O. BOX 1450
ALEXANDRIA, VA 22313-1450
www.uspto.gov

MARIAN J. FURST
MARIAN J. FURST, ATTORNEY AT LAW
4956 W. 6200 S.
#315
KEARNS, UT 84118

MAILED

JAN 25 2011

PCT LEGAL ADMINISTRATION

In re Application of ACME UNITED CORP. :
PCT Application No.: PCT/US2010/051158 :
Int. Filing Date: 01 October 2010 : DECISION
Priority Date Claimed: 13 September 2009 :
Attorney Docket No.: AU-10-01 :
For: CUTTING IMPLEMENT WITH :
INTERCHANGEABLE/REPLACEABLE BLADES :

This is in response to applicant's petition filed 23 December 2010, which is being treated under 37 CFR 1.181.

BACKGROUND

On 01 October 2010, applicant filed international application papers with the United States Receiving Office (RO/US). The submission was assigned the above-identified International Application Number and International Filing Date.

On 13 November 2010, the United States International Searching Authority (ISA/US) mailed an Invitation to Pay Additional Fees and, Where Applicable, Protest Fee (Form PCT/ISA/206).

On 23 December 2010, applicant filed the present petition under 37 CFR 1.181.

DISCUSSION

The petition states that Form PCT/ISA/206 was not received by applicant until 15 December 2010 and requests that the one month time limit for response be restarted.

MPEP 710.06, Section I, states,

> The Office will grant a petition to restart the previously set period for reply to an Office action to run from the date of receipt of the Office action at the correspondence address when the following criteria are met:
>
> (A) the petition is filed within 2 weeks of the date of receipt of the Office action at the correspondence address;
>
> (B) a substantial portion of the set reply period had elapsed on the date of receipt (e.g., at least 1 month of a 2- or 3-month reply period had elapsed); and
>
> (C) the petition includes (1) evidence showing the date of receipt of the Office action at the correspondence address (e.g., a copy of the Office action having the date of receipt of the Office action at the correspondence address stamped thereon, a copy of the envelope (which contained the Office action) having the date of receipt of the Office action at the correspondence address stamped thereon, etc.), and (2) a statement setting forth the date of receipt of the Office action at the correspondence address and explaining how the evidence being presented establishes the date of receipt of the Office action at the correspondence address.

With regard to item (A), the instant petition was filed within two weeks of the purported date of receipt of Form PCT/ISA/206 at the correspondence address.

With regard to item (B), the totality of the reply period had elapsed on the purported date of receipt.

With regard to item (C), the petition includes a copy of Form PCT/ISA/206, a copy of the envelope, a statement setting forth the date of receipt, and an explanation regarding how the presented evidence establishes the date of receipt. However, the handwritten date of receipt on Form PCT/ISA/206 and the mailing envelope will not be accepted as a "stamp" unless applicant supplies a statement from the practitioner that the handwritten notation was made on the day of receipt and is in accordance with the practitioner's standard practice of recording the receipt of documents.

CONCLUSION

For the reasons above, the petition under 37 CFR 1.181 is DISMISSED without prejudice.

If reconsideration on the merits of the petition is desired, a proper response must be filed within TWO (2) MONTHS from the mail date of this decision. Any reconsideration request should include a cover letter entitled "Renewed Petition Under 37 CFR 1.181".

Please direct further correspondence with respect to this matter to Mail Stop PCT, Commissioner for Patents, Office of PCT Legal Administration, P.O. Box 1450, Alexandria, Virginia 22313-1450, with the contents of the letter marked to the attention of the Office of PCT Legal Administration.

Bryan Lin
PCT Legal Examiner
PCT Legal Office

Telephone: 571-272-3303
Facsimile: 571-273-0459

UNITED STATES PATENT AND TRADEMARK OFFICE

COMMISSIONER FOR PATENTS
UNITED STATES PATENT AND TRADEMARK OFFICE
P.O. BOX 1450
ALEXANDRIA, VA 22313-1450
www.uspto.gov

MARIAN J. FURST
MARIAN J. FURST, ATTORNEY AT LAW
4956 W. 6200 S.
#315
KEARNS, UT 84118

MAILED
FEB 25 2011
PCT LEGAL ADMINISTRATION

In re Application of ACME UNITED CORP. :
PCT Application No.: PCT/US2010/051158 :
Int. Filing Date: 01 October 2010 : DECISION
Priority Date Claimed: 13 September 2009 :
Attorney Docket No.: AU-10-01 :
For: CUTTING IMPLEMENT WITH :
INTERCHANGEABLE/REPLACEABLE BLADES :

This is in response to applicant's renewed under 37 CFR 1.181 filed 04 February 2011.

BACKGROUND

On 01 October 2010, applicant filed international application papers with the United States Receiving Office (RO/US). The submission was assigned the above-identified International Application Number and International Filing Date.

On 13 November 2010, the United States International Searching Authority (ISA/US) mailed an Invitation to Pay Additional Fees and, Where Applicable, Protest Fee (Form PCT/ISA/206).

On 23 December 2010, applicant filed a petition under 37 CFR 1.181.

On 25 January 2011, this Office mailed a decision dismissing the 23 December 2010 petition.

On 04 February 2011, applicant filed the instant renewed petition under 37 CFR 1.181.

DISCUSSION

The petition states that Form PCT/ISA/206 was not received by applicant until 15 December 2010 and requests that the one month time limit for response be restarted.

MPEP 710.06, Section I, states,

> The Office will grant a petition to restart the previously set period for reply to an Office action to run from the date of receipt of the Office action at the correspondence address when the following criteria are met:
>
> (A) the petition is filed within 2 weeks of the date of receipt of the Office action at the correspondence address;
> (B) a substantial portion of the set reply period had elapsed on the date of receipt (e.g., at least 1 month of a 2- or 3-month reply period had elapsed); and
> (C) the petition includes (1) evidence showing the date of receipt of the Office action at the correspondence address (e.g., a copy of the Office action having the date of receipt of the Office action at the correspondence address stamped thereon, a copy of the envelope (which contained the Office action) having the date of receipt of the Office action at the correspondence address stamped thereon, etc.), and (2) a statement setting forth the date of receipt of the Office action at the correspondence address and explaining how the evidence being presented establishes the date of receipt of the Office action at the correspondence address.

Applicant previously satisfied items (A) and (B) above.

With regard to item (C), applicant previously provided a copy of Form PCT/ISA/206, a copy of the envelope, a statement setting forth the date of receipt, and an explanation regarding how the presented evidence establishes the date of receipt. The renewed petition states that the handwritten date of receipt on Form PCT/ISA/206 and the mailing envelope was consistent with the attorney's standard procedures. Accordingly, such handwritten notations are accepted as a "stamp" within the meaning of MPEP 710.06.

CONCLUSION

For the reasons above, the renewed petition under 37 CFR 1.181 is GRANTED.

The mailing date of the Invitation to Pay Additional Fees and, Where Applicable, Protest Fee (Form PCT/ISA/206) is hereby reset to 25 February 2011.

This application is being forwarded to the ISA/US for processing in accordance with this decision.

Bryan Lin
PCT Legal Examiner
PCT Legal Office

Telephone: 571-272-3303
Facsimile: 571-273-0459

ATTACHMENT: new Invitation to Pay Additional Fees and, Where Applicable, Protest Fee (Form PCT/ISA/206)

PATENT COOPERATION TREATY

From the INTERNATIONAL SEARCHING AUTHORITY

To: MARIAN J. FURST
MARIAN J. FURST, ATTORNEY AT LAW
4956 W. 6200 S.
315
KEARNS, UT 84118

PCT

INVITATION TO PAY ADDITIONAL FEES
AND, WHERE APPLICABLE, PROTEST FEE

(PCT Article 17(3)(a) and Rules 40.1 and 40.2(e))

Applicant's or agent's file reference AU-10-01	Date of mailing *(day/month/year)* 25 FEB 2011 PAYMENT DUE within **ONE MONTH** from the above date of mailing
International application No. PCT/US 10/51158	International filing date *(day/month/year)* 01 October 2010 (01.10.2010)
Applicant ACME UNITED CORPORATION	

1. This International Searching Authority

(i) considers that there are 2 *(number of)* inventions claimed in the international application covered by the claims indicated below/on an extra sheet:
See extra sheet

(ii) therefore considers that **the international application does not comply with the requirement of unity of invention** (Rules 13.1, 13.2 and 13.3) for the reasons indicated below/on an extra sheet:
See extra sheet

(iii) ☐ has carried out a partial international search (see Annex) ☒ will establish the international search report on those parts of the international application which relate to the invention first mentioned in claims Nos.:
1-31, 64-68

(iv) will establish the international search report on the other parts of the international application only if, and to the extent to which, additional fees are paid.

2. Consequently, the applicant is hereby **invited to pay**, within the time limit indicated above, additional fees in the amount indicated below:

$2080 (Fee per additional invention) x 1 (number of additional inventions) = $2080 (total amount of additional fees/currency)

3. The applicant is informed that, according to Rule 40.2(c), **the payment of any additional fees may be made under protest**, that is, a reasoned statement to the effect that the international application complies with the requirement of unity of invention or that the amount of the required additional fees is excessive, where applicable, subject to the payment of a protest fee.

Where the applicant pays additional fees under protest, the applicant is hereby invited, within the time limit indicated above, to pay a protest fee (Rule 40.2(e)) in the amount of _____ *(amount/currency)*

Where the applicant has not, within the time limit indicated above, paid the required protest fee, the protest will be considered not to have been made and the International Searching Authority will so declare.

4. ☐ Claim(s) Nos. _____ have been found to be unsearchable under Article 17(2)(b) because of defects under Article 17(2)(a) and therefore have not been included with any invention.

Name and mailing address of the ISA/US Mail Stop PCT, Attn: ISA/US Commissioner for Patents P.O. Box 1450, Alexandria, Virginia 22313-1450 Facsimile No. 571-273-3201	Authorized officer: Lee W. Young PCT Helpdesk: 571-272-4300 PCT OSP: 571-272-7774

Form PCT/ISA/206 (April 2005)

INVITATION TO PAY ADDITIONAL FEES
AND, WHERE APPLICABLE, PROTEST FEE

International application No.
PCT/US 10/51158

This application contains the following inventions or groups of inventions which are not so linked as to form a single general inventive concept under PCT Rule 13.1. In order for all inventions to be examined, the appropriate additional examination fees must be paid.

Group 1: Claims 1-31, 64-68 are directed at a cutting implement having a handle assembly, blade assembly, and a paddle.

Group 2: Claims 32-63, are directed at a cutting implement having a handle assembly, blade assembly, and fulcrum means.

The special technical feature of Group 1 is a paddle, which is not present in Group 2. The special technical feature of Group 2 is fulcrum means, which is not present in Group 1.

The only elements of commonality between the two groups are a handle and blade assembly, which is well known in the art (US 5,787,589 A (Auderset), see fig 1).

Accordingly, unity of invention is lacking under PCT Rule 13.1.

UNITED STATES PATENT AND TRADEMARK OFFICE

Commissioner for Patents
United States Patent and Trademark Office
P.O. Box 1450
Alexandria, VA 22313-1450
www.uspto.gov

THOMAS J. D'AMICO
DICKSTEIN SHAPIRO LLP
1825 EYE STREET, NW
WASHINGTON, DC 20006-5403

MAILED

OCT 28 2010

PCT LEGAL ADMINISTRATION

In re Application of:
FIRST SOLAR, INC., et al.
PCT No.: PCT/US2010/051987
Int. Filing Date: 08 October 2010
Priority Date: 29 July 2010
Attorney's Docket No.: F45001001P1001PC
For: A MOUNTING SYSTEM SUPPORTING SLIDABLE INSTALLATION OF A PLURALITY OF SOLAR PANELS AS A UNIT

DECISION REGARDING SEARCHING AUTHORITY

On 08 October 2010, applicant filed international application PCT/US2010/051987.

In Box No. VII-1 of the Request (Form PCT/RO/101), applicant identified the United States Patent Office (ISA/US) as the International Searching Authority. Applicant provided an international search fee payment of $2080.00, the amount the ISA/US requires as the international searching authority.

On 15 October 2010, applicant filed the present request herein. The petition requests that the international searching authority be changed to the European Patent Office (EPO).

Applicant is advised that as technical preparations have already begun for the ISA/US to prepare the international search report and written opinion it is not possible to grant applicant's petition at this time and the request is appropriately DISMISSED.

This application is being forwarded to the appropriate technology center for preparation and mailing of the international search report and written opinion.

Derek A. Putonen
Attorney-Advisor
Office of PCT Legal Administration
Tel: (571) 272-3298

UNITED STATES PATENT AND TRADEMARK OFFICE

MAILED

MAR 21 2011

PCT LEGAL ADMINISTRATION

Commissioner for Patents
United States Patent and Trademark Office
P.O. Box 1450
Alexandria, VA 22313-1450
www.uspto.gov

SUBBALAKSHMI PRAKASH
SABINSA CORPORATION
20 LAKE DRIVE
EAST WINDSOR NJ 08520

In re Application of	:	
SAMI LABS LIMITED	:	DECISION
PCT No.: PCT/US2010/054899	:	
Date of Receipt: 30 October 2010	:	
Priority Date Claimed: 31 August 2010	:	
Attorney's Docket No.: 2010-INO	:	
For: INOTILONE DERIVATIVES AS COHERENT	:	
BIOLOGICAL RESPONSE MODIFIER (CBMR)	:	

This decision is response to applicants' request to restore priority filed in the United States Patent and Trademark Office (USPTO) on 30 October 2010 and 09 November 2010.

The subject priority claim (application number 61/238,533 filed 31 August 2009) was listed in Box VI of the PCT Request filed 30 October 2010 which is within the two month period required by PCT Rule 26*bis*.3 for restoration of right of priority. Applicant has included a statement that the delay in filing the international application was unintentional. However, applicant did not pay the required petition fee within the two month period. See 37 CFR 1.452. Applicant paid the fee on 09 November 2010 which is outside the two month period.

For the reasons discussed above, applicant's petition to restore the right of priority under PCT Rule 26*bis*.3 is **REFUSED**.

This application is being forwarded to the RO/US for further processing in accordance with this decision.

/Daniel Stemmer/
Daniel Stemmer
Legal Examiner

PCT Legal Affairs
Office of Patent Cooperation Treaty
Legal Administration
Telephone: (571) 272-3301

CC: International Bureau of WIPO

Enc.: NOTIFICATION OF DECISION ON REQUEST TO RESTORE RIGHT OF PRIORITY (Form PCT/RO/158)

UNITED STATES PATENT AND TRADEMARK OFFICE

Commissioner for Patents
United States Patent and Trademark Office
P.O. Box 1450
Alexandria, VA 22313-1450
www.uspto.gov

MAILED

FEB 25 2011

PCT LEGAL ADMINISTRATION

MAYA SKUBATCH
WILSON SONSINI GOODRICH & ROSATI
650 PAGE MILL ROAD
PALO ALTO CA CALIFORNIA 94304-1050

In re Application of:
ARTEMIS HEALTH, INC.
PCT No: PCT/US2010/058614
International Filing Date: 01 December 2010
Priority Date: 19 January 2010
Attorney's Docket No.: 32047-780601
For: SEQUENCING METHODS AND COMPOSITIONS FOR PRENATAL DIAGNOSIS

DECISION
(37 CFR 1.159(b))

This decision is issued in response to the "Petition To Expunge Inadvertently Filed Document Under 37 CFR 1.59(b)" filed by applicant on 03 February 2011. Applicant has paid the petition fee applicable to a petition under 37 CFR 1.59(b).

BACKGROUND

On 03 January 2011, applicant filed a "Response To Invitation To Furnish Nucleotide And/Or Amino Acid Sequence Listing And/Or Tables Related Thereto Complying With Standard And/Or Technical Requirements" accompanied by a copy of the sequence listing in electronic form, a "Statement Accompanying Sequence Listing" and a 105 page document that included a revised version of the description, claims, and abstract of the present application.

On 06 January 2011, the USPTO issued a "Notification Of Decision Concerning Request For Rectification" (Form PCT/ISA/217) indicating that the 105 page version of the description, claims, and abstract filed on 03 January 2011 contained substantive changes from the application as filed and that these materials would therefore not be entered into the present application as replacement sheets.

On 03 February 2011, applicant filed the "Petition To Expunge Inadvertently Filed Document Under 37 CFR 1.59(b)" discussed herein. The petition requests that the 105 page document filed on 06 January 2011 be expunged from the application file pursuant to 37 CFR 1.59(b).

DISCUSSION

The present petition was filed under 37 CFR 1.59(b); however, 37 CFR 1.59(b) is not applicable to international applications filed under the PCT. The petition is therefore

appropriately dismissed as moot. The $200 petition fee charged to Deposit Account No. 23-2415 with respect to this petition will be refunded to the Deposit Account.

The PCT does not contain a specific mechanism for removing from an application file papers inadvertently filed therein; however, applicants may consider filing a petition under 37 CFR 1.182 requesting that the inadvertently filed documents be removed from the file. Any such petition must include the applicable $400 petition fee and an acceptable showing of due cause as to why the document should be removed from the application file.

The above suggestion to consider a petition under 37 CFR 1.182 should not be construed as an indication as to whether or not any such petition filed by applicant will be granted.

CONCLUSION

For the reasons discussed above, applicant's "Petition To Expunge Inadvertently Filed Document Under 37 CFR 1.59(b)" filed 03 February 2011 is **DISMISSED AS MOOT**.

The $200 petition fee charged to Deposit Account No. 23-2415 will be refunded to Deposit Account.

The 105 page document inadvertently filed by applicant on 03 January 2011 remains in the application file; however, as set forth in the Form PCT/ISA/217 mailed 06 January 2011, these materials will not be entered into the international application.

/RichardMRoss/

Richard M. Ross
Attorney Advisor
Office of PCT Legal Administration
Telephone: (571) 272-3296

UNITED STATES PATENT and TRADEMARK OFFICE

COMMISSIONER FOR PATENTS
UNITED STATES PATENT AND TRADEMARK OFFICE
P.O BOX 1450
ALEXANDRIA, VA 22313-1450
www.uspto.gov

MAILED
JUL 28 2011
PCT LEGAL ADMINISTRATION

Sterne, Kessler, Goldstein & Fox, P.L.L.C
1100 New York Avenue, N.W.
Washington, D.C. 20005-3934

In re Application of :
MARKTEK BIOSCIENCES CORP. :
PCT No.: PCT/US2010/062274 : DECISION ON
Int. Filing Date: 28 Dec 2010 :
Priority Date: 28 Dec 2009 : PETITION
Attorney's Docket No.: 2715045PC01 :
For: PRODUCTION OF HEMAGGLUTININ- :
NEURAMINIDASE PROTEIN IN MICROALGAE :

This decision is in response to the "PETITION TO MOVE RESPONSE TO THE INVITATION TO PAY ADDITIONAL FEES....." filed on 21 July 2011, indicating that the communication entitled "Response to the Invitation to Pay Additional Fees Under PCT Article 17(3) and Rule 40.1", filed 07 April 2011, was inadvertently filed in the present application and requesting that such communication be moved to the intended application (PCT/US2010/062276). Applicant's request has been treated as a petition under 37 CFR 1.182.

The petition is **GRANTED** as follows:

The communication filed 07 April 2011 was submitted via EFS-Web in PCT/US2010/062274. The communication identifies international application PCT/US2010/062276 by international application number, title, attorney docket no., filing date and applicant. As such, it would be appropriate to move the communication to PCT/US2010/062276. Payment of the additional search fee has been refunded to Deposit Account 190036.

Any further correspondence with respect to this matter may be filed electronically via EFS-Web selecting the document description "Petition for review and processing by the PCT Legal Office" or by mail addressed to Mail Stop PCT, Commissioner for Patents, Office of PCT Legal Administration, P.O. Box 1450, Alexandria, Virginia 22313-1450, with the contents of the letter marked to the attention of the Office of PCT Legal Administration.

/Boris Milef/

Boris Milef
PCT Legal Examiner
Office of PCT Legal Administration

UNITED STATES PATENT AND TRADEMARK OFFICE

Commissioner for Patents
United States Patent and Trademark Office
P.O. Box 1450
Alexandria, VA 22313-1450
www.uspto.gov

Jennifer S. Sickler
GARDERE WYNNE SEWELL LLP
1000 Louisiana, Suite 3400
Houston, TX 77002-5012

MAILED
SEP 21 2011
PCT LEGAL ADMINISTRATION

In re Application of :
VISUAL INTELLIGENCE, LP :
PCT No.: PCT/US2011/000575 :
Int. Filing Date: 31 March 2011 :
Priority Date: 13 April 2010 :
Docket No.: 127976.2031 :
For: SELF-CALIBRATED, REMOTE IMAGING AND DATA PROCESSING SYSTEM :

DECISION

This decision is in response to applicants' "Notice of PCT Legal Division Decision and Request to Correct Priority Claim" filed 26 August 2011. No petition fee is required.

BACKGROUND

On 31 March 2011, applicants filed the above-captioned international application claiming priority to three applications, *i.e.*, U.S. provisional application No. 60/412,504 filed 20 September 2002; U.S. application No. 10/664,737 filed 18 September 2003; and U.S. application No. 11/581,235 filed 10 October 2006.

On 21 April 2011, the United States Receiving Office (RO/US) mailed three (3) Invitation(s) to Correct Priority Claim and/or Notification of Possibility to Request Restoration of the Right of Priority (Form PCT/RO/110) indicating that the priority claims do not fall within the period of 12 months from the international filing date.

On 19 May 2011, applicants filed a request to delete U.S. application No. 10/664,737 filed 18 September 2003 and requested restoration of priority under the unintentional standard. Applicants included a $20.00 fee payment.

On 01 June 2011, the RO/US mailed a Communication in Cases for Which No Other Form is Applicable (Form PCT/RO/132) noting that the restoration of priority request was inappropriate and refunding the $20.00 payment. A Notification Relating to Priority Claim (Form PCT/RO/111) indicating that the three priority claims filed with the original Request were considered void.

On 10 August 2011, applicants filed a supplemental response requesting to add U.S. application No. 12/798,899 filed on 13 April 2010 based upon restoration of priority. A $1,410.00 petition fee was submitted.

On 17 August 2011, the RO/US mailed a Communication in Cases for Which No Other Form is Applicable (Form PCT/RO/132) noting that the restoration of priority request was inappropriate and refunding the $1,410.00 fee. The request to add the priority claim was treated under PCT Rule 26*bis*.1 and dismissed as untimely. A Notification Relating to Priority Claim (Form PCT/RO/111) was mailed stating that the priority claim U.S. application No. 12/798,899 could not be added as it was after the prescribed time limit under PCT Rule 26*bis*.1(a).

On 26 August 2011, applicants filed a request for reconsideration of the decision to add the priority claim.

DISCUSSION

The Patent Cooperation Treaty (PCT) allows a priority claim to be changed using PCT Rule 26*bis*.1(a) *Correction or Addition of Priority Claim* which states, in part:

> The applicant may correct a priority claim or add a priority claim to the request by a notice submitted to the receiving Office or the International Bureau within a time limit of 16 months from the priority date or, where the correction or addition would cause a change in the priority date, 16 months from the priority date as so changed, whichever 16-month period expires first, provided that such a notice may be submitted until the expiration of four months from the international filing date.

The RO/US interpreted PCT Rule 26*bis*.1(a) to mean that the request to add the priority claim must be submitted within four months of the international filing date (31 July 2011). As such, the request to add the priority claim filed 10 August 2011 was considered untimely.

After careful review, this decision has been changed. PCT Rule 26bis.1(a) is now interpreted as follows. The original priority claims were considered void, as such, the international filing date became the new priority date of the international application. Applicants may now add a new priority claim within 16 months from the new priority date (16 August 2011). Therefore, applicants request to add a priority claim on 10 August 2011 pursuant to PCT Rule 26bis.1(a) is considered timely.

CONCLUSION

For the above listed reasons, applicants' request for consideration is hereby **GRANTED**.

The Form PCT/RO/111 mailed 17 August 2011 is hereby **VACATED.**

The Form PCT/RO/132 mailed 17 August 2011 is **VACATED** to the extent that

the request to add the priority claim on 10 August 2011 was not timely filed.

A Notification Relating to Priority Claim (Form PCT/RO/111) showing the addition of the priority claim will be mailed with this decision.

This application will be forwarded to the RO/US for further processing in accordance with this decision. A copy of this decision will be sent to the International Bureau.

James Thomson
Attorney Advisor
Office of PCT Legal Administration

Tel.: (571) 272-3302

cc: The International Bureau of WIPO
34, chemin des Colombettes
1211 Geneva 20
Switzerland

UNITED STATES PATENT AND TRADEMARK OFFICE

Commissioner for Patents
United States Patent and Trademark Office
P.O. Box 1450
Alexandria, VA 22313-1450
www.uspto.gov

Thomas J. Kowalski
Vedder Price P.C.
1633 Broadway
New York, New York 10019

MAILED
JUL 15 2011
PCT LEGAL ADMINISTRATION

In re Application of :
HEALTH INSURANCE, INC. :
PCT No.: PCT/US2011/000702 :
Int. Filing Date: 20 April 2011 : DECISION ON PETITION
Priority Date: 19 April 2010 :
Attorney Docket No.: 43092.99.2273 :
For: METHOD OF IDENTIFYING AND TREATING A PERSON HAVING A PREDISPOSITION TO OR AFFLICTED WITH PARKINSON DISEASE :

This decision is issued in response to applicant's "Response to Notification of Possibility to Request Restoration of the Right of Priority and Petition for Corrected Filing Date" filed 17 June 2011, which is being treated as a petition under 37 CFR 1.10(d) to accord an international filing date of 19 April 2011 to the above-identified international application. No petition fee is required.

BACKGROUND

The United States Receiving Office accorded an international filing date of 20 April 2011 to the above-identified international application.

On 17 June 2011, applicant filed the present petition requesting that the international application be accorded a filing date of 19 April 2011. The petition is accompanied a "Customer Copy" of Express Mail label no. "EM563304996US" showing a "date in" date of 20 April 2011.

DISCUSSION

A review of the application file confirms that the "date in" entered by the USPS on "Express Mail" label number EM563301996US was 20 April 2011. With the present petition, applicant seeks to have a filing date assigned to the international application (19 April 2011) that differs from the "date in" entered by the USPS. The applicable regulation in such circumstances is 37 CFR 1.10(d), which states the following:

37 CFR 1.10(d) states:

> (d) Any person filing correspondence under this section that was received by the Office and delivered by the "Express Mail Post Office to Addressee" service of the USPS, who can show that the "date-in" on the "Express Mail" mailing label or other official notation entered by the USPS was incorrectly entered or omitted by the USPS, may petition the Commissioner to accord the correspondence a filing date as of the date the correspondence is shown to have been deposited with the USPS, provided that:
>
> (1) The petition is filed promptly after the person becomes aware that the Office has accorded, or will accord, a filing date based upon an incorrect entry by the USPS;
>
> (2) The number of the "Express Mail" mailing label was placed on the paper(s) or fee(s) that constitute the correspondence prior to the original mailing by "Express Mail";
>
> (3) The petition includes a showing which establishes, to the satisfaction of the Commissioner, that the requested filing date was the date the correspondence was deposited in "Express Mail Post Office to Addressee" service prior to the last scheduled pickup for that day. Any showing pursuant to this paragraph must be corroborated by evidence from the USPS or that came into being after deposit and within one business day of the correspondence in the "Express Mail Post Office to Addressee" service of the USPS.

With regard to item (1) above, the present petition was promptly filed after applicant became aware that the Office had accorded a filing date based upon an allegedly incorrect entry by the USPS. Item (1) is satisfied.

With regard to item (2) above, the number of the Express Mail mailing label appears on the transmittal letter submitted with the original application materials. Item (2) is satisfied.

With regard to item (3), applicant has provided a firsthand statement from Roberto Cruz (office service clerk at Vedder Price, P.C.) describing the deposit of the "Express Mail" envelope with USPS. The statement assert that, "I deposited the above-referenced patent application in the U.S. Postal Service drop box . . . prior to 5:00 pm on April 19, 2011."[1] However, the petition does not include sufficient corroborating evidence regarding the deposit of the "Express Mail" envelope. Applicant has not supplied a mail log "made within

---

[1]As stated in 37 CFR 1.10(b), persons who deposit correspondence in an Express Mail drop box do so at the risk of not receiving the desired "date-in" date. A paper or fee placed in an Express Mail drop box after the last pickup is considered to be deposited as of the "date-in" date on the Express Mail label. See MPEP 513.

one business day" of the "Express Mail deposit confirming the deposit and containing information such as the "Express Mail" label number, the application number, the docket number, the place and time of deposit, the last scheduled pick-up at such location, and the time of the entry in the log (see MPEP 513(II)).

Based on the above, applicant has not provided an adequate showing confirming that 19 April 2011 was the date the application was deposited with the USPS as "Express Mail" prior to the last scheduled pickup for that day. Applicant must provide such a showing, in the form required by 37 CFR 1.10(d) (i.e., with evidence from the USPS or that came into being within one business day of the deposit) before the final requirement of a grantable petition can be considered satisfied.

CONCLUSION

Accordingly, the petition under 37 CFR 1.10(d) is **DISMISSED** without prejudice.

If reconsideration on the merits of this petition is desired, a proper reply must be filed within **TWO (2) MONTHS** from the mail date of this decision. Any reconsideration request should include a cover letter entitled "Renewed Petition Under 37 CFR 1.10(d)." No additional petition fee is required.

Any further correspondence with respect to this matter may be filed electronically via EFS-Web selecting the document description "Petition for review and processing by the PCT Legal Office" or by mail addressed to Mail Stop PCT, Commissioner for Patents, Office of PCT Legal Administration, P.O. Box 1450, Alexandria, Virginia 22313-1450, with the contents of the letter marked to the attention of the Office of PCT Legal Administration.

Mailed herewith is a "Notification of Decision on Request to Restore Right of Priority" (Form PCT/RO/159) indicating that, pursuant to applicant's request filed 17 June 2011, the addition of priority claim of U.S. application serial number 61/325,582 filed 19 April 2010. As indicated thereon, a copy of such form will be forwarded to the International Bureau.

Anthony Smith
Attorney-Advisor
Office of PCT Legal Administration
Tel: (571) 272-3298

cc: The International Bureau of WIPO
34, chemin des Colombettes
1211 Geneva 20
Switzerland

UNITED STATES PATENT AND TRADEMARK OFFICE

Commissioner for Patents
United States Patent and Trademark Office
P.O. Box 1450
Alexandria, VA 22313-1450
www.uspto.gov

Thomas J. Kowalski
Vedder Price P.C.
1633 Broadway
New York, New York 10019

MAILED
NOV 04 2011
PCT LEGAL ADMINISTRATION

In re Application of :
HEALTH INSURANCE, INC. :
PCT No.: PCT/US2011/000702 :
Int. Filing Date: 20 April 2011 : DECISION ON PETITION
Priority Date: 19 April 2010 :
Attorney Docket No.: 43092.99.2273 :
For: METHOD OF IDENTIFYING AND TREATING A PERSON HAVING A PREDISPOSITION TO OR AFFLICTED WITH PARKINSON DISEASE :

This decision is issued in response to applicant's "Renewed Petition under 37 CFR 1.10(d)" filed 15 September 2011 to accord an international filing date of 19 April 2011 to the above-identified international application. No petition fee is required.

BACKGROUND

The United States Receiving Office accorded an international filing date of 20 April 2011 to the above-identified international application.

On 17 June 2011, applicant filed a petition requesting that the international application be accorded a filing date of 19 April 2011. In a decision dated 15 July 2011, applicant's petition under 37 CR 1.10(d) was dismissed without prejudice.

On 15 September 2011, applicant filed the present petition under 37 CFR 1.10(d).

DISCUSSION

A review of the application file confirms that the "date in" entered by the USPS on "Express Mail" label number EM563301996US was 20 April 2011. With the present petition, applicant seeks to have a filing date assigned to the international application (19 April 2011) that differs from the "date in" entered by the USPS. The applicable regulation in such circumstances is 37 CFR 1.10(d), which states the following:

37 CFR 1.10(d) states:

> (d) Any person filing correspondence under this section that was received by the Office and delivered by the "Express Mail Post Office to Addressee" service of the USPS, who can show that the "date-in" on the "Express Mail" mailing label or other official notation entered by the USPS was incorrectly entered or omitted by the USPS, may petition the Commissioner to accord the correspondence a filing date as of the date the correspondence is shown to have been deposited with the USPS, provided that:
>
> (1) The petition is filed promptly after the person becomes aware that the Office has accorded, or will accord, a filing date based upon an incorrect entry by the USPS;
>
> (2) The number of the "Express Mail" mailing label was placed on the paper(s) or fee(s) that constitute the correspondence prior to the original mailing by "Express Mail";
>
> (3) The petition includes a showing which establishes, to the satisfaction of the Commissioner, that the requested filing date was the date the correspondence was deposited in "Express Mail Post Office to Addressee" service prior to the last scheduled pickup for that day. Any showing pursuant to this paragraph must be corroborated by evidence from the USPS or that came into being after deposit and within one business day of the correspondence in the "Express Mail Post Office to Addressee" service of the USPS.

Item (1) and Item (2) have been satisfied.

With regard to item (3), applicant's previous petition included a statement from Roberto Cruz (office service clerk at Vedder Price, P.C.) describing the deposit of the "Express Mail" envelope with USPS. The statement asserts that, "I deposited the above-referenced patent application in the U.S. Postal Service drop box . . . prior to 5:00 pm on April 19, 2011."[1] MPEP § 513, discusses the form of evidence required to satisfy the remaining requirement set forth in 37 CFR 1.10(d)(3)(emphasis added):

> Parties who use drop boxes can protect themselves from uncertainty due to illegible mail labels by routinely maintaining a log of "Express Mail" deposits in which notations are entered by the person who deposited the correspondence as "Express Mail" within one business day after deposit with the USPS. Such evidence could be useful later to support a petition filed under 37 CFR 1.10(c), (d), (e). Evidence that came into being after deposit

[1]As stated in 37 CFR 1.10(b), persons who deposit correspondence in an Express Mail drop box do so at the risk of not receiving the desired "date-in" date. A paper or fee placed in an Express Mail drop box after the last pickup is considered to be deposited as of the "date-in" date on the Express Mail label. See MPEP 513.

> and within one day after the deposit of the correspondence as "Express Mail" may be in the form of a log book which contains information such as the "Express Mail number; the application number, attorney docket number or other such file identification number, the place, date and time of deposit, the time of the last scheduled pick-up for that date and place of deposit; the depositor's initials or signature, and the date and time of entry in the log.

Here, applicant has not made the showing required under 37 CFR 1.10. Such a showing must be in the form required by the applicable rules (see MPEP section 513(VI)). The present petition includes no evidence from the USPS to corroborate the claims made in the petition, nor has applicant provided an acceptable "mail log" which satisfies the requirements set forth in the MPEP. While the "Express Mail Log" filed with the present petition shows an intent to file application papers for the above-identified docket number, the "Express Mail Log" does not satisfy the requirements under 37 CFR 1.10(d)(3), in that, the "Express Mail Log" fails to include the date and time of entry in the log. Therefore, it is not presently possible to conclude that the log entry was made after the mailing was deposited in the drop box. Additionally, a statement from "R.C.", the depositor of the Express Mail envelope, has not been presented confirming that the entry in the mail log was made after the parcel was deposited in the drop box.

Without further corroborative evidence from the USPS regarding the deposit of the present international application on 20 April 2011, as required under 37 CFR 1.10(d)(3), applicant has not established to the satisfaction of the Commissioner that the present application was deposited as "Express Mail" prior to midnight on 20 April 2011. Accordingly, on the present record, applicant has not satisfied 37 CFR 1.10(d)(3).

Based on the above, applicant has failed to satisfy all the requirements for a grantable petition under 37 CFR 1.10(d). The international filing date remains 20 April 2011.

CONCLUSION

Accordingly, the petition under 37 CFR 1.10(d) is **DISMISSED** without prejudice.

If reconsideration on the merits of this petition is desired, a proper reply must be filed within **TWO (2) MONTHS** from the mail date of this decision. Any reconsideration request should include a cover letter entitled "Renewed Petition Under 37 CFR 1.10(d)." No additional petition fee is required.

Any further correspondence with respect to this matter may be filed electronically via EFS-Web selecting the document description "Petition for review and processing by the PCT Legal Office" or by mail addressed to Mail Stop PCT, Commissioner for Patents, Office of PCT Legal Administration, P.O. Box 1450, Alexandria, Virginia 22313-1450, with the contents of the letter marked to the attention of the Office of PCT Legal Administration.

of PCT Legal Administration, P.O. Box 1450, Alexandria, Virginia 22313-1450, with the contents of the letter marked to the attention of the Office of PCT Legal Administration.

Anthony Smith
Attorney-Advisor
Office of PCT Legal Administration
Tel: (571) 272-3298

cc: The International Bureau of WIPO
34, chemin des Colombettes
1211 Geneva 20
Switzerland

UNITED STATES PATENT AND TRADEMARK OFFICE

Commissioner for Patents
United States Patent and Trademark Office
P.O. Box 1450
Alexandria, VA 22313-1450
www.uspto.gov

Thomas J. Kowalski
Vedder Price P.C.
1633 Broadway
New York, New York 10019

MAILED
MAR 06 2012
PCT LEGAL ADMINISTRATION

In re Application of
HEALTH INSURANCE, INC.
PCT No.: PCT/US2011/000702
Int. Filing Date: 20 April 2011
Priority Date: 19 April 2010
Attorney Docket No.: 43092.99.2273
For: METHOD OF IDENTIFYING AND TREATING A PERSON HAVING A PREDISPOSITION TO OR AFFLICTED WITH PARKINSON DISEASE

DECISION ON PETITION

This decision is issued in response to applicant's (second) "Renewed Petition under 37 CFR 1.10(d)" filed 04 January 2012 to accord an international filing date of 19 April 2011 to the above-identified international application. No petition fee is required.

BACKGROUND

The United States Receiving Office accorded an international filing date of 20 April 2011 to the above-identified international application.

On 17 June 2011, applicant filed a petition requesting that the international application be accorded a filing date of 19 April 2011. In a decision dated 15 July 2011, applicant's petition under 37 CR 1.10(d) was dismissed without prejudice.

On 15 September 2011, applicant filed a petition under 37 CFR 1.10(d). In a decision dated 04 November 2011, applicant's petition under 37 CR 1.10(d) was dismissed without prejudice.

On 04 January 2012, applicant filed the present renewed petition under 37 CFR 1.10(d).

DISCUSSION

The statutory authority for the granting of a filing date based in the date of deposit for correspondence sent by "Express Mail" and received by the Office is found in 35 U.S.C.

§21(a).[1] The specific rule for obtaining a filing date as of the date of deposit in "Express Mail (rather than the date of receipt at the Office) is 37 CFR 1.10.

A review of the application file confirms that the "date in" entered by the USPS on "Express Mail" label number EM563301996US was 20 April 2011. With the present petition, applicant seeks to have a filing date assigned to the international application (19 April 2011) that differs from the "date in" entered by the USPS. The applicable regulation in such circumstances is 37 CFR 1.10(d), which states the following:

37 CFR 1.10(d) states:

> (d) Any person filing correspondence under this section that was received by the Office and delivered by the "Express Mail Post Office to Addressee" service of the USPS, who can show that the "date-in" on the "Express Mail" mailing label or other official notation entered by the USPS was incorrectly entered or omitted by the USPS, may petition the Director to accord the correspondence a filing date as of the date the correspondence is shown to have been deposited with the USPS, provided that:
>
> (1) The petition is filed promptly after the person becomes aware that the Office has accorded, or will accord, a filing date based upon an incorrect entry by the USPS;
>
> (2) The number of the "Express Mail" mailing label was placed on the paper(s) or fee(s) that constitute the correspondence prior to the original mailing by "Express Mail";
>
> (3) The petition includes a showing which establishes, to the satisfaction of the Director, that the requested filing date was the dates the correspondence was deposited in "Express Mail Post Office to Addressee" service prior to the last scheduled pickup for that day. Any showing pursuant to this paragraph must be corroborated by evidence from the USPS or that came into being after deposit and within one business day of the correspondence in the "Express Mail Post Office to Addressee" service of the USPS.

Item (1) and Item (2) have been satisfied.

Petitioner's second renewed petition does not comply with the requirements set forth in the statute and specific requirements of 37 CFR 1.10(d)(3). Petitioner has not proffered an adequate showing the to the satisfaction of the Director, that the requested filing date of 19 April 2011 was the date the correspondence was deposited in the "Express Mail Post Office to Addressee" service prior to the last scheduled pickup for that day.

---

[1] 35 U.S.C. §21 states that the Director may by rule prescribe that any paper or fee required to be filed in the Patent and Trademark Office will be considered filed in the Office on the date on which it was deposited with the United States Postal Service or would have been deposited with the United States Postal Service but for postal service interruptions or emergencies designated by the Director.

With regard to item (3), applicant's present petition include statements from Sarah Marcano (paralegal at Vedder Price, P.C.) and Roberto Cruz (office service clerk at Vedder Price, P.C.) describing the deposit of the "Express Mail" envelope with USPS. The statements assert that, "I (Roberto Cruz) deposited the above-referenced patent application in the U.S. Postal Service drop box . . . prior to 5:00 pm on April 19, 2011. . . I confirm that Sarah Marcano made the entry for the April 19, 2011 mailing and I initialed the entry after the mailing was deposited in the drop box."[2] MPEP § 513, discusses the form of evidence required to satisfy the remaining requirement set forth in 37 CFR 1.10(d)(3)(emphasis added):

> Parties who use drop boxes can protect themselves from uncertainty due to illegible mail labels by routinely maintaining a log of "Express Mail" deposits in which notations are entered **by the person who deposited the correspondence** as "Express Mail" within one business day after deposit with the USPS. Such evidence could be useful later to support a petition filed under 37 CFR 1.10(c), (d), (e). Evidence that came into being after deposit and within one day after the deposit of the correspondence as "Express Mail" may be in the form of a log book which contains information such as the "Express Mail number; the application number, attorney docket number or other such file identification number, the place, date and time of deposit, the time of the last scheduled pick-up for that date and place of deposit; **the depositor's initials or signature, and the date and time of entry in the log.**

Here, applicant has not made the showing required under 37 CFR 1.10. Such a showing must be in the form required by the applicable rules (see MPEP section 513(VI)). Petitioner states the "Express Mail Log" is acceptable and that MPEP §513 provides suggestions as to be the information the log book should contain and does not provide a mandatory list as to what is required in a log book. However, the Express Mail Log mail log here does not meet the requirements set forth in the MPEP. Most significantly, the relevant log entry was not created by Roberto Cruz, the person who deposited the correspondence (the mail log does have Roberto Cruz's (RC) initials next to the entry, but as stated in the accompanying declaration that the entry (including time of deposit) was entered by Sarah Marcano as an identifier, rather than by Roberto Cruz as confirmation of the timely deposit). Further, the log also does not set forth the time of the deposit by the depositor, which is determinative here.

Without corroborative evidence from the USPS regarding the deposit of the present international application on 19 April 2011, as required under 37 CFR 1.10(d)(3), applicant has not established to the satisfaction of the Commissioner that the present application

---

[2]As stated in 37 CFR 1.10(b), persons who deposit correspondence in an Express Mail drop box do so at the risk of not receiving the desired "date-in" date. A paper or fee placed in an Express Mail drop box after the last pickup is considered to be deposited as of the "date-in" date on the Express Mail label. See MPEP 513.

was deposited as "Express Mail" prior to midnight on 20 April 2011. Accordingly, on the present record, applicant has not satisfied 37 CFR 1.10(d)(3).

Based on the above, applicant has failed to satisfy all the requirements for a grantable petition under 37 CFR 1.10(d). The international filing date remains 20 April 2011.

CONCLUSION

Accordingly, the petition under 37 CFR 1.10(d) is DISMISSED without prejudice.

If reconsideration on the merits of this petition is desired, a proper reply must be filed within **TWO (2) MONTHS** from the mail date of this decision. Any reconsideration request should include a cover letter entitled "Renewed Petition Under 37 CFR 1.10(d)." No additional petition fee is required.

Any further correspondence with respect to this matter may be filed electronically via EFS-Web selecting the document description "Petition for review and processing by the PCT Legal Office" or by mail addressed to Mail Stop PCT, Commissioner for Patents, Office of PCT Legal Administration, P.O. Box 1450, Alexandria, Virginia 22313-1450, with the contents of the letter marked to the attention of the Office of PCT Legal Administration.

Anthony Smith
Attorney-Advisor
Office of PCT Legal Administration
Tel: (571) 272-3298

cc: The International Bureau of WIPO
34, chemin des Colombettes
1211 Geneva 20
Switzerland

UNITED STATES PATENT AND TRADEMARK OFFICE

MAILED

SEP 28 2011

PCT LEGAL ADMINISTRATION

Commissioner for Patents
United States Patent and Trademark Office
P.O. Box 1450
Alexandria, VA 22313-1450
www.uspto.gov

JEFFREY S. SOKOL
SOKOL LAW OFFICE
828 N. BROADWAY, SUITE 400
MILWAUKEE WI WISCONSIN 53202

In re Application of
MORTIER
PCT App. No.: PCT/US11/01273
Int'l Filing Date: 18 July 2011
Priority Date: 16 July 2010
Attorney Docket No.: 210-P-007
For: OVERHEAD DOOR WITH SPRING-LOADED ROLLER HINGES

DECISION ON

PETITION UNDER

37 CFR 1.181

This is a decision on applicant's "Response to Invitation to Correct Defect and Petition For Date of Deposit Pursuant to 37 CFR 1.181", filed on 08 August 2011 in the US Patent and Trademark Office.

BACKGROUND

On 18 July 2011, applicant filed a Request for an international application along with a description, claims and drawings. On 02 August 2011, an Invitation to Correct Defects in the International Application was mailed to applicant indicating that an abstract was not found among the application papers filed on 18 July 2011.

On 05 August 2011, applicant filed the present petition in response to the Invitation, requesting that the Office accept a copy of the abstract in lieu of the original abstract along with a copy of the USPTO date-stamped itemized post card receipt.

DISCUSSION

The abstract allegedly submitted on 18 July 2011 is not found in the application file.

As stated in section 503 of the Manual of Patent Examining Procedure (MPEP):

> A postcard receipt which itemizes and properly identifies the items which are being filed serves as *prima facie* evidence of receipt in the USPTO of all the items listed thereon on the date stamped thereon by the USPTO.
>
> The identifying data on the postcard should be so complete as to clearly identify the item for which a receipt is requested. For example, the postcard should identify the applicant's name, application number (if known), confirmation number (if known), filing date, interference number, title of invention, etc.

With his petition, Petitioner provided a copy of the abstract filed on 18 July 2011 and a copy of the USPTO date-stamped postcard receipt indicating that an abstract was filed along with the originally filed international application papers. The postcard identifies the first

applicant/inventor's name, title of the invention and docket number. The postcard is date-stamped by the USPTO "Rec'd PCT 18 JUL 2011".

A review of the USPTO date-stamped, itemized postcard receipt and the accompanying application papers indicate that the abstract was deposited with the USPTO on 18 July 2011. Applicant has now presented a copy of the abstract originally filed on 18 July 2011 and provided a copy of the date-stamped postcard receipt. Thus, the evidence is sufficient to establish that the abstract was received in the USPTO on 18 July 2011 and that the postcard receipt indicating a date of 18 July 2011 was mailed by the USPTO. Accordingly, the Office accepts the copy of the abstract papers as a replacement for the missing original documents with a deposit date of 18 July 2011.

CONCLUSION

Applicant's petition under 37 CFR 1.181 to accept a copy of the abstract originally filed on 18 July 2011 is **GRANTED**.

A copy of the abstract originally submitted on 18 July 2011 and resubmitted on 08 August 2011 is acceptable and will be made of record.

The international filing date remains 18 July 2011.

The application will be forwarded to the United States Receiving Office for further processing in accord with this decision.

/Cynthia M. Kratz/
Cynthia M. Kratz
Attorney Advisor
Office of PCT Legal Administration
Telephone: (571) 272-3286
Facsimile: (571) 273-0459

UNITED STATES PATENT AND TRADEMARK OFFICE

Commissioner for Patents
United States Patent and Trademark Office
P.O. Box 1450
Alexandria, VA 22313-1450
www.uspto.gov

MAILED

MAR 21 2011

PCT LEGAL ADMINISTRATION

JOHN A. HANKINS
MCDERMOTT WILL & EMERGY LLP
11682 EL CAMINO REAL, SUITE 400
SAN DIEGO CA 92130

In re Application of	:	
HALLIBURTON ENERGY SERVICES, INC.	:	DECISION
PCT No.: PCT/US2011/021579	:	
Date of Receipt: 18 January 2011	:	
Priority Date Claimed: 17 December 2009	:	
Attorney's Docket No.: 086108-0399	:	
For: FORMATION CONDITIONING FLUIDS	:	
COMPRISING PEROXIDES AND METHODS	:	
RELATING THERETO	:	

This decision is response to applicants' submission filed in the United States Patent and Trademark Office (USPTO) on 18 January 2011.

On 18 January 2011, applicant filed the above captioned PCT application in the United States Receiving Office (RO/US) accompanied by a request to restore priority.

Applicant has included a statement that the delay in filing the international application was unintentional. In addition, the subject priority claim (application number 12/641,162 filed 17 December 2009) was listed in Box VI of the PCT Request filed 18 January 2011 which is within the two month period required by PCT Rule 26*bis*.3 for restoration of right of priority. Lastly, applicant has paid the required $1,410 petition fee. As such, it is appropriate to grant applicant's petition at this time.

For the reasons discussed above, applicant's petition to restore the right of priority under PCT Rule 26*bis*.3 is **GRANTED**.

This application is being forwarded to the RO/US for further processing in accordance with this decision.

/Daniel Stemmer/

Daniel Stemmer
Legal Examiner

PCT Legal Affairs
Office of Patent Cooperation Treaty
Legal Administration
Telephone: (571) 272-3301

CC: International Bureau of WIPO

Enc.: NOTIFICATION OF DECISION ON REQUEST TO RESTORE RIGHT OF PRIORITY (Form PCT/RO/159)

UNITED STATES PATENT AND TRADEMARK OFFICE

Commissioner for Patents
United States Patent and Trademark Office
P.O. Box 1450
Alexandria, VA 22313-1450
www.uspto.gov

MICHAEL G. MUNSELL
ARMSTRONG TEASDALE LLP
7700 FORSYTH BLVD.
SUITE 1800
ST. LOUIS, MO 63105-1847

DECISION

In re Application of
MONSANTO TECHNOLOGY LLC
Int. Application No.: PCT/US11/22092
Int. Filing Date: 21 January 2011
Priority Date: 22 January 2010
Attorney Docket No.: 29135-00304
For: ENHANCING PERFORMANCE OF CROPS WITHIN AN AREA OF INTEREST

MAILED
FEB 03 2011
PCT LEGAL ADMINISTRATION

This decision is issued in response to applicant's request to change the international searching authority, filed 26 January 2011, which will be treated as a petition under 37 CFR 1.182. Applicant is requesting to change the searching authority for the above-identified application to the United States International Searching Authority (ISA/US). Deposit Account no. 01-2384 has been charged a $400 petition fee under 37 CFR 1.17(f).

On 21 January 2011, applicant filed international application PCT/US11/22092, which claimed priority of an earlier US application filed 22 January 2010. In Box No. VII-1 International Searching Authority, applicant indicated the European Patent Office (EP) as the International Searching Authority. Additionally, applicant indicated on the Fee Calculation Sheet that the search fee was $2443, the amount the ISA/EP required for the EP to be the International Searching Authority.

The records of the United States Receiving Office (RO/US) show that the Search Copy has not been forwarded to ISA/EP. Accordingly, applicant's request to change the searching authority is **GRANTED**. The $2443 search fee for the ISA/EP will be refunded to Deposit Account no. 01-2384. The $2080 search fee for ISA /US has been charged to Deposit Account no. 01-2384.

Any further correspondence with respect to this matter should be addressed to: Mail Stop PCT, Commissioner for Patents, Attn: Office of PCT Legal Administration, P.O. Box 1450, Alexandria, Virginia 22313-1450.

Wanda Banks, Paralegal Specialist
Office of PCT Legal Administration
Telephone: 571-272-3277

Rafael Bacares, PCT Legal Examiner
Office of PCT Legal Administration

UNITED STATES PATENT and TRADEMARK OFFICE

COMMISSIONER FOR PATENTS
UNITED STATES PATENT AND TRADEMARK OFFICE
P.O BOX 1450
ALEXANDRIA, VA 22313-1450
www.uspto.gov

DUANE C. BASCH
BASCH & NICKERSON LLP
1777 PENFIELD ROAD
PENFIELD NY NEW YORK 14526

MAILED

APR 12 2011

PCT LEGAL ADMINISTRATION

In re Application of	:	DECISION ON
ALMBLAD et al	:	
PCT No.: PCT/US2011/023661	:	
Int. Filing Date: 04 February 2011	:	REQUEST FOR REFUND
Priority Date: 04 February 2010	:	
Attorney's Docket No.: 1260034010301	:	
For: A CYLINDRICAL PISTON ASSISTED	:	
BLENDING VESSEL	:	UNDER 37 CFR 1.181

This Decision is in response to applicants' "PETITION FOR REFUND," filed on 28 February 2011, which is being treated as a petition under 37 CFR 1.181 requesting a refund of on the overpayment of the search fee as the International Searching Authority (ISA) was the US rather than the EPO.

BACKGROUND

On 04 February 2011, applicant filed the above identified PCT application including a payment of $2,443.00 for the search fee. However, the applicant indicated the US as the International Searching Authority (ISA) on Box VII of the Request form.

On 10 February 2011, the RO/US issued a "COMMUNICATION IN CASES FOR WHICH NO OTHER FORM IS APPLICABLE" (Form PCT/RO/132) informing applicant to clarify the selection of the International Search Authority.

On 15 February 2011, applicant filed a communication that applicant requests that the international search be conducted by the EPO.

On 22 February 2011, the RO/US issued a "COMMUNICATION IN CASES FOR WHICH NO OTHER FORM IS APPLICABLE" (Form PCT/RO/132) informing applicant that, Box No. VII of the Request indicated that the ISA/US as the choice of ISA and if applicant requests a change of ISA, applicant may file a petition under 37 CFR 1.182 together with the accompanying $400 petition fee.

On 28 February 2011, applicant filed a communication indicating that the US remain as the ISA and a petition for a refund of $363.00 for the overpayment fee paid to the ISA for the international search.

DISCUSSION

Pursuant 37 CFR §1.26(a) (refunds) "[a]ny fee paid in excess of that required will be refunded, but a mere change of purpose after the payment of money, as when a party desires to withdraw an application,... will not entitle a party to demand such a return."

A review of the file shows that the RO/US refunded to applicant's credit card the International Search fee for the EPO of $2,443.00 on 09 February 2011, and the fee of $2,080.00 for the RO/US as the ISA was also charged on 09 February 2011. As a result, applicant has been charged the correct International Search fee for selecting the US as the ISA. Therefore, applicant's petition for a refund of the $363.00 for the overpayment of the search fee is moot.

Accordingly, the RO/US has already refunded the EPO's International Search fee to applicant's credit card, and no further action is required.

CONCLUSION

The petition under 37 CFR 1.181 is **MOOT.**

Rafael Bacares
PCT Legal Examiner
PCT Legal Office
Telephone: (571) 272- 3276
Facsimile: (571) 273-0459

UNITED STATES PATENT AND TRADEMARK OFFICE

Commissioner for Patents
United States Patent and Trademark Office
P.O. Box 1450
Alexandria, VA 22313-1450
www.uspto.gov

JAMES J. PINGOR
KEGLER, BROWN, HILL & RITTER
600 SUPERIOR AVE. EAST, SUITE 1300
CLEVELAND OH 44114

MAILED

SEP 27 2011

PCT LEGAL ADMINISTRATION

In re Application of
Preformed Line Products Company.
Int. Appl. No.: PCT/US2011/023906
Int. Filing Date: 07 February 2011
Priority Date: 15 February 2010
Attorney Docket No.: 106807-15PCT
For: Cable Hoist Dead-End Systems And Methods

DECISION

This is in response to the refund request filed on 03 August 2011 and 10 August 2011.

BACKGROUND

International application PCT/US2011/023906 was filed on 07 February 2011, and claimed an earlier priority date of 15 February 2010. On 16 February 2011, a Notification of the International Application Number And Of The International Filing Date (Form PCT/RO/105) was mailed to applicants.

On 18 April 2011, an Invitation to Pay Additional Fees (Form PCT/ISA/206) was mailed, inviting applicants to pay $4160.00 in view of a lack of unity of invention.

On 17 May 2011, applicants filed a response, specifically electing Species I (claims 1-18 and 27-39).

On 05 July 2011, an International Search Report (Form PCT/ISA/210) was mailed.

DISCUSSION

Counsel requests a refund of the $4160.00 charged on 17 May 2011. Review of the record reveals that applicants elected "Species 1" in response to Form PCT/ISA/206. Further review reveals that the International Search Report (ISR) was prepared consistently with that election. Specifically, the ISR states that "No required additional search fees were timely paid by the applicant. Consequently, this international search report is restricted to the invention first mentioned in the claims; it is covered by claims Nos.: 1-17 and 26-39." Note that claim 26 was indicated to be generic in Form PCT/ISA/206. In view of these facts, it would be appropriate to conclude that the $4160.00 in question was charged in error. Accordingly, said funds will be refunded to applicants.

DECISION

The refund request is **GRANTED**.

The $4160.00 (fee code 1604) charged on 17 May 2011 will be refunded to counsel's Deposit Account no. 05-0960, per the authorization included in the refund request.

/George Dombroske/
George Dombroske
PCT Legal Examiner
Office of PCT Legal Administration
Tel: (571) 272-3283

UNITED STATES PATENT AND TRADEMARK OFFICE

Commissioner for Patents
United States Patent and Trademark Office
P.O. Box 1450
Alexandria, VA 22313-1450
www.uspto.gov

MAILED

MAY 26 2011

PCT LEGAL ADMINISTRATION

Stanley M. Schurgin
Weingarten, Schurgin, Gagnebin & Lebovici, LLP
Ten Post Office Square
Boston, MA 02109

In re Application of: MEMSIC, INC	:	PETITION
PCT Application No.: PCT/US2011/025217	:	
International Filing Date: 17 February 2011	:	UNDER
Priority Date: 19 March 2010	:	
Attorney's Docket No.: MEMSC-040Xq999	:	
For: MAGNETOMETER	:	37 CFR 1.181

This decision is in response to applicants' "Petition for Reconsideration regarding the Notification of Transmittal of the International Search Report and Written Opinion dated 14 April 2011" filed 06 May 2011, which has been treated as a petition under 37 C.F.R. 1.181. No petition fee is required.

BACKGROUND

On 14 April 2011, the United States International Searching Authority (ISA/US) issued a Notification of Transmittal of the International Search Report and the Written Opinion of the International Searching Authority, or the Declaration (form PCT/ISA/220), International Search Report (form PCT/ISA/210), and Written Opinion of the International Searching Authority (form PCT/ISA/237).

On 06 May 2011, applicants filed the present petition requesting that a corrected version of the International Search Report be issued indicating whether the title and abstract under items 4 and 5, respectively, were amended or approved by the ISA/US.

DISCUSSION

A review of the file reveals that the ISA/US failed to indicate under items 4 and 5 on page 2 of the International Search Report that that the title and abstract were approved as submitted by the applicant.

CONCLUSION

For the reasons given above, the applicants' petition under 37 CFR 1.181 is **GRANTED**.

The Corrected International Search Report (form PCT/ISA/210) along with a Notification of Transmittal of the International Search Report and the Written Opinion of the International Searching Authority, or the Declaration (form PCT/ISA/220) and Written Opinion of the International Searching Authority (form PCT/ISA/237) are attached to this decision. A copy of this decision is being forwarded to the IB.

Bryan Lin
PCT Legal Examiner
Office of PCT Legal Administration

Harry C. Kim
PCT Special Programs Examiner
Office of PCT Legal Administration
Telephone: (571) 272-3285

ATTACHMENT: Corrected International Search Report (form PCT/ISA/210), a Notification of Transmittal of the International Search Report and the Written Opinion of the International Searching Authority, or the Declaration (form PCT/ISA/220), and a Written Opinion of the International Searching Authority (form PCT/ISA/237)

CORRECTED

PATENT COOPERATION TREATY

PCT

INTERNATIONAL SEARCH REPORT

(PCT Article 18 and Rules 43 and 44)

Applicant's or agent's file reference MEMSC-040XQ999	**FOR FURTHER ACTION**	see Form PCT/ISA/220 as well as, where applicable, item 5 below.
International application No. PCT/US 11/25217	International filing date *(day/month/year)* 17 February 2011 (17.02.2011)	(Earliest) Priority Date *(day/month/year)* 19 March 2010 (19.03.2010)
Applicant MEMSIC, INC.		

This international search report has been prepared by this International Searching Authority and is transmitted to the applicant according to Article 18. A copy is being transmitted to the International Bureau.

This international search report consists of a total of 3 sheets.

☐ It is also accompanied by a copy of each prior art document cited in this report.

1. **Basis of the report**

a. With regard to the **language**, the international search was carried out on the basis of:

☒ the international application in the language in which it was filed.

☐ a translation of the international application into _____ which is the language of a translation furnished for the purposes of international search (Rules 12.3(a) and 23.1(b)).

b. ☐ This international search report has been established taking into account the **rectification of an obvious mistake** authorized by or notified to this Authority under Rule 91 (Rule 43.6*bis*(a)).

c. ☐ With regard to any **nucleotide and/or amino acid sequence** disclosed in the international application, see Box No. I.

2. ☒ **Certain claims were found unsearchable** (see Box No. II).

3. ☐ **Unity of invention is lacking** (see Box No. III).

4. With regard to the **title**,

☒ the text is approved as submitted by the applicant.

☐ the text has been established by this Authority to read as follows:

5. With regard to the **abstract**,

☒ the text is approved as submitted by the applicant.

☐ the text has been established, according to Rule 38.2, by this Authority as it appears in Box No. IV. The applicant may, within one month from the date of mailing of this international search report, submit comments to this Authority.

6. With regard to the **drawings**,

a. the figure of the **drawings** to be published with the abstract is Figure No. 2

☒ as suggested by the applicant.

☐ as selected by this Authority, because the applicant failed to suggest a figure.

☐ as selected by this Authority, because this figure better characterizes the invention.

b. ☐ none of the figures is to be published with the abstract.

INTERNATIONAL SEARCH REPORT

International application No.
PCT/US 11/25217

Box No. II Observations where certain claims were found unsearchable (Continuation of item 2 of first sheet)

This international search report has not been established in respect of certain claims under Article 17(2)(a) for the following reasons:

1. ☐ Claims Nos.:
because they relate to subject matter not required to be searched by this Authority, namely:

2. ☐ Claims Nos.:
because they relate to parts of the international application that do not comply with the prescribed requirements to such an extent that no meaningful international search can be carried out, specifically:

3. ☒ Claims Nos.: 8-11 and 16
because they are dependent claims and are not drafted in accordance with the second and third sentences of Rule 6.4(a).

Box No. III Observations where unity of invention is lacking (Continuation of item 3 of first sheet)

This International Searching Authority found multiple inventions in this international application, as follows:

1. ☐ As all required additional search fees were timely paid by the applicant, this international search report covers all searchable claims.

2. ☐ As all searchable claims could be searched without effort justifying additional fees, this Authority did not invite payment of additional fees.

3. ☐ As only some of the required additional search fees were timely paid by the applicant, this international search report covers only those claims for which fees were paid, specifically claims Nos.:

4. ☐ No required additional search fees were timely paid by the applicant. Consequently, this international search report is restricted to the invention first mentioned in the claims; it is covered by claims Nos.:

Remark on Protest

☐ The additional search fees were accompanied by the applicant's protest and, where applicable, the payment of a protest fee.

☐ The additional search fees were accompanied by the applicant's protest but the applicable protest fee was not paid within the time limit specified in the invitation.

☐ No protest accompanied the payment of additional search fees.

INTERNATIONAL SEARCH REPORT

International application No.
PCT/US 11/25217

A. CLASSIFICATION OF SUBJECT MATTER
IPC(8) - G01B 7/24 (2011.01)
USPC - 324/207.13
According to International Patent Classification (IPC) or to both national classification and IPC

B. FIELDS SEARCHED

Minimum documentation searched (classification system followed by classification symbols)
IPC(8): G01B 7/24 (2011.01)
USPC: 324/207.13

Documentation searched other than minimum documentation to the extent that such documents are included in the fields searched
USPC: 324/200, 207.21, 207.2, 207.11; 338/32R, 32H

Electronic data base consulted during the international search (name of data base and, where practicable, search terms used)
PubWEST(PGPB, USPT, USOCR, EPAB, JPAB); Google Patents; Google Scholar
magnetic, field, sensor, detector, reader, AMR, anisotropic, magnetoresistance, direction, orientation, realignment, time, period, barber, pole, nested, spiral, offset, flex, bend, fold, tab, hinge, pivot, perpendicular, orthogonal, normal, axis, ASIC

C. DOCUMENTS CONSIDERED TO BE RELEVANT

Category*	Citation of document, with indication, where appropriate, of the relevant passages	Relevant to claim No.
X	US 2009/0315129 A1 (ALBERTINI) 24 December 2009 (24.12.2009) para [0048], [0049], [0050], [0062], [0064], [0066] [0023], [0039]	5-7, 13-15
X ----- Y	US 2003/0132826 A1 (WAN) 17 July 2003 (17.07.2003) fig. 2, 3, 4; para [0017], [0018], [0020], [0023]	12, 17, 21, 22 ----- 1-4, 18-20
Y	US 6,100,686 A (VAN DELDEN et al.) 08 August 2000 (08.08.2000) col 4, ln 59-65; col 5, ln 20-23	1-4
Y	US 2009/0219011 A1 (JAMES) 03 September 2009 (03.09.2009) para [0015]	18
Y	US 2005/0154549 A1 (LIN et al.) 14 July 2005 (14.07.2005) para [0016], [0021], [0023], [0025]	19, 20
Y	US 7,126,327 B1 (BUSCH) 24 October 2006 (24.10.2006) col 5, ln 62-67	3, 4/3

☐ Further documents are listed in the continuation of Box C. ☐

* Special categories of cited documents:
"A" document defining the general state of the art which is not considered to be of particular relevance
"E" earlier application or patent but published on or after the international filing date
"L" document which may throw doubts on priority claim(s) or which is cited to establish the publication date of another citation or other special reason (as specified)
"O" document referring to an oral disclosure, use, exhibition or other means
"P" document published prior to the international filing date but later than the priority date claimed
"T" later document published after the international filing date or priority date and not in conflict with the application but cited to understand the principle or theory underlying the invention
"X" document of particular relevance; the claimed invention cannot be considered novel or cannot be considered to involve an inventive step when the document is taken alone
"Y" document of particular relevance; the claimed invention cannot be considered to involve an inventive step when the document is combined with one or more other such documents, such combination being obvious to a person skilled in the art
"&" document member of the same patent family

Date of the actual completion of the international search	Date of mailing of the international search report
05 April 2011 (05.04.2011)	26 MAY 2011
Name and mailing address of the ISA/US Mail Stop PCT, Attn: ISA/US, Commissioner for Patents P.O. Box 1450, Alexandria, Virginia 22313-1450 Facsimile No. 571-273-3201	Authorized officer: Lee W. Young PCT Helpdesk: 571-272-4300 PCT OSP: 571-272-7774

Form PCT/ISA/210 (second sheet) (July 2009)

PATENT COOPERATION TREATY

From the INTERNATIONAL SEARCHING AUTHORITY

To:
PAUL D. SORKIN
WEINGARTE, SCHURGIN, GAGNEBIN & LEBOVICI, LLP
TEN POST OFFICE SQUARE
BOSTON, MASSACHUSETTS 02109

PCT

NOTIFICATION OF TRANSMITTAL OF THE INTERNATIONAL SEARCH REPORT AND THE WRITTEN OPINION OF THE INTERNATIONAL SEARCHING AUTHORITY, OR THE DECLARATION

(PCT Rule 44.1)

	Date of mailing *(day/month/year)* 26 MAY 2011
Applicant's or agent's file reference MEMSC-040XQ999	**FOR FURTHER ACTION** See paragraphs 1 and 4 below
International application No. PCT/US 11/25217	International filing date *(day/month/year)* 17 February 2011 (17.02.2011)
Applicant MEMSIC, INC.	

1. ☒ The applicant is hereby notified that the international search report and the written opinion of the International Searching Authority have been established and are transmitted herewith.

   Filing of amendments and statement under Article 19:
   The applicant is entitled, if he so wishes, to amend the claims of the international application (see Rule 46):

   When? The time limit for filing such amendments is normally two months from the date of transmittal of the international search report.

   Where? Directly to the International Bureau of WIPO, 34 chemin des Colombettes 1211 Geneva 20, Switzerland, Facsimile No.: +41 22 338 82 70

   For more detailed instructions, see *PCT Applicant's Guide*, International Phase, paragraphs 9.004 – 9.011.

2. ☐ The applicant is hereby notified that no international search report will be established and that the declaration under Article 17(2)(a) to that effect and the written opinion of the International Searching Authority are transmitted herewith.

3. ☐ **With regard to any protest** against payment of (an) additional fee(s) under Rule 40.2, the applicant is notified that:

   ☐ the protest together with the decision thereon has been transmitted to the International Bureau together with any request to forward the texts of both the protest and the decision thereon to the designated Offices.

   ☐ no decision has been made yet on the protest; the applicant will be notified as soon as a decision is made.

4. **Reminders**

   The applicant may submit comments on an informal basis on the written opinion of the International Searching Authority to the International Bureau. The International Bureau will send a copy of such comments to all designated Offices unless an international preliminary examination report has been or is to be established. Following the expiration of 30 months from the priority date, these comments will also be made available to the public.

   Shortly after the expiration of **18 months** from the priority date, the international application will be published by the International Bureau. If the applicant wishes to avoid or postpone publication, a notice of withdrawal of the international application, or of the priority claim, must reach the International Bureau before the completion of the technical preparations for international publication (Rules 90*bis*.1 and 90*bis*.3).

   Within **19 months** from the priority date, but only in respect of some designated Offices, a demand for international preliminary examination must be filed if the applicant wishes to postpone the entry into the national phase **until 30 months** from the priority date (in some Offices even later); otherwise, the applicant must, **within 20 months** from the priority date, perform the prescribed acts for entry into the national phase before those designated Offices.

   In respect of other designated Offices, the time limit of **30 months** (or later) will apply even if no demand is filed within 19 months.

   For details about the applicable time limits, Office by Office, see www.wipo.int/pct/en/texts/time_limits.html and the *PCT Applicant's Guide*, National Chapters.

Name and mailing address of the ISA/ Mail Stop PCT, Attn: ISA/US Commissioner for Patents P.O. Box 1450, Alexandria, Virginia 22313-1450	Authorized officer Lee W. Young PCT Helpdesk: 571-272-4300
Facsimile No. 571-273-3201	Telephone No. PCT OSP: 571-272-7774

Form PCT/ISA/220 (July 2010)

PATENT COOPERATION TREATY

From the
INTERNATIONAL SEARCHING AUTHORITY

To: PAUL D. SORKIN
WEINGARTE, SCHURGIN, GAGNEBIN & LEBOVICI, LLP
TEN POST OFFICE SQUARE
BOSTON, MASSACHUSETTS 02109

PCT

WRITTEN OPINION OF THE
INTERNATIONAL SEARCHING AUTHORITY

(PCT Rule 43*bis*.1)

Date of mailing *(day/month/year)*	26 MAY 2011
Applicant's or agent's file reference MEMSC-040XQ999	**FOR FURTHER ACTION** See paragraph 2 below

International application No.	International filing date *(day/month/year)*	Priority date *(day/month/year)*
PCT/US 11/25217	17 February 2011 (17.02.2011)	19 March 2010 (19.03.2010)

International Patent Classification (IPC) or both national classification and IPC
IPC(8) - G01B 7/24 (2011.01)
USPC - 324/207.13

Applicant MEMSIC, INC.

1. This opinion contains indications relating to the following items:

- ☒ Box No. I Basis of the opinion
- ☐ Box No. II Priority
- ☒ Box No. III Non-establishment of opinion with regard to novelty, inventive step and industrial applicability
- ☐ Box No. IV Lack of unity of invention
- ☒ Box No. V Reasoned statement under Rule 43*bis*.1(a)(i) with regard to novelty, inventive step or industrial applicability; citations and explanations supporting such statement
- ☐ Box No. VI Certain documents cited
- ☐ Box No. VII Certain defects in the international application
- ☐ Box No. VIII Certain observations on the international application

2. **FURTHER ACTION**

If a demand for international preliminary examination is made, this opinion will be considered to be a written opinion of the International Preliminary Examining Authority ("IPEA") except that this does not apply where the applicant chooses an Authority other than this one to be the IPEA and the chosen IPEA has notified the International Bureau under Rule 66.1*bis*(b) that written opinions of this International Searching Authority will not be so considered.

If this opinion is, as provided above, considered to be a written opinion of the IPEA, the applicant is invited to submit to the IPEA a written reply together, where appropriate, with amendments, before the expiration of 3 months from the date of mailing of Form PCT/ISA/220 or before the expiration of 22 months from the priority date, whichever expires later.

For further options, see Form PCT/ISA/220.

3. For further details, see notes to Form PCT/ISA/220.

Name and mailing address of the ISA/US	Date of completion of this opinion	Authorized officer:
Mail Stop PCT, Attn: ISA/US Commissioner for Patents P.O. Box 1450, Alexandria, Virginia 22313-1450 Facsimile No. 571-273-3201	05 April 2011 (05.04.2011)	Lee W. Young PCT Helpdesk: 571-272-4300 PCT OSP: 571-272-7774

WRITTEN OPINION OF THE
INTERNATIONAL SEARCHING AUTHORITY

International application No.
PCT/US 11/25217

Box No. I Basis of this opinion

1. With regard to the **language**, this opinion has been established on the basis of:

   ☒ the international application in the language in which it was filed.

   ☐ a translation of the international application into _____ which is the language of a translation furnished for the purposes of international search (Rules 12.3(a) and 23.1(b)).

2. ☐ This opinion has been established taking into account the **rectification of an obvious mistake** authorized by or notified to this Authority under Rule 91 (Rule 43*bis*.1(a))

3. With regard to any **nucleotide and/or amino acid sequence** disclosed in the international application, this opinion has been established on the basis of a sequence listing filed or furnished:

   a. (means)

   ☐ on paper

   ☐ in electronic form

   b. (time)

   ☐ in the international application as filed

   ☐ together with the international application in electronic form

   ☐ subsequently to this Authority for the purposes of search

4. ☐ In addition, in the case that more than one version or copy of a sequence listing has been filed or furnished, the required statements that the information in the subsequent or additional copies is identical to that in the application as filed or does not go beyond the application as filed, as appropriate, were furnished.

5. Additional comments:

WRITTEN OPINION OF THE
INTERNATIONAL SEARCHING AUTHORITY

International application No.
PCT/US 11/25217

Box No. III Non-establishment of opinion with regard to novelty, inventive step and industrial applicability

The questions whether the claimed invention appears to be novel, to involve an inventive step (to be non obvious), or to be industrially applicable have not been examined in respect of:

☐ the entire international application.

☒ claims Nos. 8-11 and 16

because:

☐ the said international application, or the said claims Nos. _____ relate to the following subject matter which does not require an international search *(specify)*:

☒ the description, claims or drawings *(indicate particular elements below)* or said claims Nos. 8-11 and 16 are so unclear that no meaningful opinion could be formed *(specify)*:

because they are dependent claims and are not drafted in accordance with the second and third sentences of Rule 6.4(a).

☐ the claims, or said claims Nos. _____ are so inadequately supported by the description that no meaningful opinion could be formed *(specify)*:

☒ no international search report has been established for said claims Nos. 8-11 and 16

☐ a meaningful opinion could not be formed without the sequence listing; the applicant did not, within the prescribed time limit:

- ☐ furnish a sequence listing on paper complying with the standard provided for in Annex C of the Administrative Instructions, and such listing was not available to the International Searching Authority in a form and manner acceptable to it.
- ☐ furnish a sequence listing in electronic form complying with the standard provided for in Annex C of the Administrative Instructions, and such listing was not available to the International Searching Authority in a form and manner acceptable to it.
- ☐ pay the required late furnishing fee for the furnishing of a sequence listing in response to an invitation under Rule 13*ter*.1(a) or (b).

☐ See Supplemental Box for further details.

WRITTEN OPINION OF THE
INTERNATIONAL SEARCHING AUTHORITY

International application No.
PCT/US 11/25217

Box No. V **Reasoned statement under Rule 43*bis*.1(a)(i) with regard to novelty, inventive step or industrial applicability; citations and explanations supporting such statement**

1. Statement

Novelty (N)	Claims	1-4, 18-20	YES
	Claims	5-8, 12-15, 17, 21, 22	NO
Inventive step (IS)	Claims	NONE	YES
	Claims	1-8, 12-15, 17-22	NO
Industrial applicability (IA)	Claims	1-8, 12-15, 17-22	YES
	Claims	NONE	NO

2. Citations and explanations:

Claims 5-7 and 13-15 lack novelty under PCT Article 33(2) as being anticipated by US 2009/0315129 A1 (Albertini).

Regarding claim 5, Albertini discloses an electronic magnetic field measuring device, comprising: a flexible substrate (para [0048] 'substrate 10') with conductive interconnect traces (para [0050] 'conductors 20'), the flexible substrate including a first portion (para [0062] 'first portion 30') and a hingeable tab portion (para [0064] 'second portion 32' and 'hinge');
an ASIC module mounted on the first portion of the flexible substrate (para [0066] 'integrated circuit 34');
a first magnetic field sensor mounted on the first portion of the flexible substrate (para [0048] 'first sensor 12');
a second magnetic field sensor mounted on the first portion of the flexible substrate (para [0048] 'second sensor 14'); and
a third magnetic field sensor mounted on the hingeable tab portion of the flexible substrate (para [0049] 'third sensor 16').

Regarding claim 6, Albertini discloses the measuring device of claim 5, further comprising: potting material applied to the flexible substrate to hold the hingeable tab portion substantially perpendicular with respect to the first portion (para [0072] 'gluing the second portion 32 to the integrated circuit 34').

Regarding claim 7, Albertini discloses the measuring device of any of claims 5-6, wherein: 10 the third magnetic field sensor is configured to measure a magnetic field on an axis orthogonal to the first portion (para [0049] 'normal ... to the front face') when the hingeable tab portion is held substantially perpendicular to the first portion (para [0072] 'gluing the second portion 32 to the integrated circuit 34').

Regarding claim 13, Albertini discloses a method of manufacturing an electronic magnetic field measuring device, the method comprising:
providing a flexible substrate (para [0048] 'substrate 10') having a plurality of conductive traces (para [0050] 'conductors 20'), the flexible substrate including a first portion (para [0062] 'first portion 30') and a tab portion (para [0064] 'second portion 32');
mounting an ASIC module on the first portion of the flexible substrate (para [0066] 'integrated circuit 34');
mounting first and second magnetic field sensors on the first portion of the flexible substrate (para [0048] 'first sensor 12' and 'second sensor 14');
mounting a third magnetic field sensor on the tab portion of the flexible substrate (para [0049] 'third sensor 16');
rendering the tab portion hingeably connected to the first portion (para [0064] 'hinge'); and
displacing the hingeably connected tab portion to be substantially perpendicular with respect to the first portion of the flexible circuit (para [0064] 'angle of up to 90 degrees').

Regarding claim 14, Albertini discloses the method of claim 13, wherein rendering the tab portion hingeably connected to the first portion comprises: excising the flexible substrate along a predefined line (para [0062] 'gap 31').

Regarding claim 15, Albertini discloses the method of any of claims 13 and 14, further comprising: providing potting material to the flexible substrate to maintain the tab portion substantially perpendicular to the first portion (para [0072] 'gluing the second portion 32 to the integrated circuit 34').

Claims 12, 17, 21 and 22 lack novelty under PCT Article 33(2) as being anticipated by US 2003/0132826 A1 (Wan).

Regarding claim 12, Wan discloses an electronic magnetic field measuring device, comprising: a first barber pole structure (para [0018] 'magnetoresistor 14') including a first permalloy portion (para [0018] 'permalloy thin films') and a plurality of shorting bars oriented at a first angle on the first permalloy portion (para [0018] 'barber poles'); and
a second barber pole structure (para [0018] 'magnetoresistor 20') including a second permalloy portion, separate from the first permalloy portion (para [0018] 'permalloy thin films'), and a second plurality of shorting bars oriented at a second angle on the second permalloy portion (para [0018] 'barber poles'),
wherein each shorting bar of the first and second pluralities of shorting bars has a same first geometry (Fig 4, para [0039]) and
wherein the first geometry comprises a rectangle with a pair of alternate and opposite clipped comers (Fig 4, para [0039]).

-Please see continuation sheet-

WRITTEN OPINION OF THE
INTERNATIONAL SEARCHING AUTHORITY

International application No.
PCT/US 11/25217

Supplemental Box

In case **the space in any of the preceding boxes is not sufficient.**
Continuation of:
Box V.2. Citations and Explanations

Regarding claim 17, Wan discloses an method of operating an electronic magnetic field measuring device comprising a plurality of anisotropic magnetoresistive (AMR) sensors (para [0018] 'magnetoresistors 14, 16, 18, 20'), the method comprising: realigning a respective magnetic domain orientation of each AMR sensor in only one direction (para [0039] 'altering the barber poles orientation'); and subsequent to the realigning of the respective magnetic domain orientation of each AMR sensor, detecting an output signal from the plurality of AMR sensors (para [0039] 'tracks the change in resistance'), the output signal being representative of a local magnetic field (para [0035] 'changes in the external magnetic field').

Regarding claim 21, Wan discloses the method of claim 17, wherein the realigning step comprises: passing a first current in a first direction through a first conductor positioned near the plurality of AMR sensors (para [0033] 'set-reset pulse'),
wherein a first magnitude and a first duration of the first current are chosen to sufficiently realign the magnetic domain orientation of each AMR sensor (para [0033] 'set-reset pulse').

Regarding claim 22, Wan discloses the method of claim 21, further comprising: orienting the first direction of the first current to pass each AMR sensor substantially perpendicular relative to a longitudinal direction of each respective AMR sensor (para [0021]).

Claims 1, 2 and 4/(1,2) lack an inventive step under PCT Article 33(3) as being obvious over Wan in view of US 6,100,686 A to Van Delden et al. (hereinafter 'Van Delden').

Regarding claim 1, Wan discloses an electronic magnetic field measuring device, comprising: a planar coil arranged in a spiral (para [0018] 'coil 32'), the planar coil having an input (para [0023] 'terminal 46') and an output (para [0023] 'terminal 48'), and first and second leg portions (fig 2, para [0023]), and the planar coil arranged in a first plane of the device (fig 3, para [0018]);
a first plurality of barber pole structures (para [0018] 'magnetoresistor 14'), each barber pole structure of a first polarity (para [0020] 'depending on the polarity'), coupled in electrical series with another (para [0019]) by a respective trace of a first plurality of conductive traces located between adjacent barber pole structures in the first plurality of series-connected barber pole structures (para [0019] 'conductive material'); and
a second plurality of barber pole structures (para [0018] 'magnetoresistor 20'), each barber pole structure of a second polarity (para [0020] 'depending on the polarity'), coupled in electrical series with another (para [0019]) by a respective trace of a second plurality of conductive traces located between adjacent barber pole structures in the second plurality of series-connected barber pole structures (para [0019] 'conductive material'),
wherein the first and second pluralities of series-connected barber pole structures are arranged in a second plane of the device different from the first plane (fig 3, para [0018]),
wherein the first and second pluralities of series-connected barber pole structures are disposed above only the first leg portion of the planar coil (fig 2, para [0023]), and
wherein the first and second pluralities of series-connected barber pole structures are arranged parallel with one another (para [0017] 'junction 22').
Wan does not specifically disclose wherein at least one trace of the first plurality of conductive traces and at least one trace of the second plurality of conductive traces are nested with one another. However, Van Delden does disclose wherein at least one trace of the first plurality of conductive traces and at least one trace of the second plurality of conductive traces are nested with one another (col 5, ln 20-23). It would have been obvious to combine the device of Wan with the structure of Van Delden because both are directed towards magnetic field measuring (Van Delden col 4, ln 59-65) and the structure of Van Delden provides greater economy of space (Van Delden col 5, ln 20-23).

Regarding claim 2, the combination of Wan and Van Delden discloses the electronic magnetic field measuring device of claim 1, and Wan further discloses a third plurality of barber pole structures (para [0018] 'magnetoresistor 16'), each barber pole structure of a first polarity (para [0020] 'depending on the polarity'), coupled in electrical series with another (para [0019]) by a respective trace of a third plurality of conductive traces located between adjacent barber pole structures in the third plurality of series-connected barber pole structures (para [0019] 'conductive material'); and
a fourth plurality of barber pole structures (para [0018] 'magnetoresistor 20'), each barber pole structure of a second polarity (para [0020] 'depending on the polarity'), coupled in electrical series with another (para [0019]) by a respective trace of a fourth plurality of conductive traces located between adjacent barber pole structures in the fourth plurality of series-connected barber pole structures (para [0019] 'conductive material'),
wherein the third and fourth pluralities of barber pole structures are arranged in the second plane of the device (fig 3, para [0018]),
wherein the third and fourth pluralities of series-connected barber pole structures are disposed above only the second leg portion of the planar coil (fig 2, para [0023]),
wherein the third and fourth pluralities of series-connected barber pole structures are arranged parallel with one another (para [0017] 'junction 24'), and
wherein the first, second, third and fourth pluralities of series-connected barber pole structures are coupled to one another to provide, respectively, first, second, third and fourth legs of a Wheatstone bridge circuit (para [0017] 'Wheatstone bridge').
Further, Van Delden discloses wherein at least one trace of the third plurality of conductive traces and at least one trace of the fourth plurality of conductive traces are nested with one another (col 5, ln 20-23).

-Please see continuation sheet-

WRITTEN OPINION OF THE
INTERNATIONAL SEARCHING AUTHORITY

International application No.
PCT/US 11/25217

Supplemental Box

In case **the space in any of the preceding boxes is not sufficient.**
Continuation of:
Box V.2. Citations and Explanations

Regarding claim 4/(1,2), the combination of Wan and Van Delden discloses the electronic magnetic field measuring device of any of claims 1 or 2, and Wan further discloses wherein: each of the first plurality of barber pole structures comprises a first permalloy portion (para [0018] 'permalloy thin films') and a plurality of shorting bars oriented at a first angle on the first permalloy portion (para [0018] 'barber poles'); and
each of the second plurality of barber pole structures comprises a second permalloy portion, separate from the first permalloy portion (para [0018] 'permalloy thin films'), and a second plurality of shorting bars oriented at a second angle on the second permalloy portion (para [0018] 'barber poles'),
wherein each shorting bar of the first and second pluralities of shorting bars has a same first geometry (Fig 4, para [0039]) and
wherein the first geometry comprises a rectangle with a pair of alternate and opposite clipped comers (Fig 4, para [0039]).

Claim 18 lacks an inventive step under PCT Article 33(3) as being obvious over Wan in view of US 2009/0219011 A1 (James).

Regarding claim 18, Wan discloses the method of claim 17, but does not specifically disclose implementing a next realignments step a predetermined amount of time after the prior realignment step. However, James does disclose implementing a next realignments step a predetermined amount of time after the prior realignment step (para [0015] 'clock drives the set and reset circuits'). It would have been obvious to one of ordinary skill in the art to combine the method of Wan with the clock of James because both are directed towards magnetic field measuring (James para [0015]) and the clock of James increases the accuracy of measurements (James para [0015]).

Claims 19 and 20 lack an inventive step under PCT Article 33(3) as being obvious over Wan in view of US 2005/0154549 A1 to Lin et al. (hereinafter 'Lin').

Regarding claim 19, Wan discloses the method of claim 17, but does not specifically disclose detecting a maximum value Vmax for the output signal since last realigning the magnetic domain orientations;
detecting a minimum value V min for the output signal since last realigning the magnetic domain orientations; and
comparing (Vmax + Vmin)/2 to a predetermined value PV to determine whether or not the realigning step should be repeated.
However, Lin does disclose detecting a maximum value Vmax for the output signal since last realigning the magnetic domain orientations (para [0023] 'Xmax');
detecting a minimum value V min for the output signal since last realigning the magnetic domain orientations (para [0023] 'Xmin'); and
comparing (Vmax + Vmin)/2 to a predetermined value PV to determine whether or not the realigning step should be repeated (para [0025] 'Xbase').
It would have been obvious to one of ordinary skill in the art to combine the method of Wan with the comparing of Lin because both are directed towards magnetic field measuring (Lin para [0016]) and the comparing of Lin provides greater measurement and calculation speed (Lin para [0016]).

Regarding claim 20, the combination of Wan and Lin discloses the method of claim 19, and Lin further discloses wherein comparing further comprises: implementing a next realignments step if (Vmax + Vmin)/2 is greater than the predetermined value PV (para [0021]).

Claims 3 and 4/3 lack an inventive step under PCT Article 33(3) as being obvious over Wan and Van Delden and in further view of US 7,126,327 B1 (Busch).

Regarding claim 3, the combination of Wan and Van Delden discloses the electronic magnetic field measuring device of claim 2, but neither specifically discloses at least one additional conductive trace, coupled to at least one of the first, second, third and fourth pluralities of series-connected barber pole structures, and configured to adjust or balance a total amount of resistance in the legs of the Wheatstone bridge circuit. However, Busch does disclose at least one additional conductive trace, coupled to at least one of the first, second, third and fourth pluralities of series-connected barber pole structures, and configured to adjust or balance a total amount of resistance in the legs of the Wheatstone bridge circuit (col 5, ln 62-67 'asymmetrical magnetoresistive bridge circuit 400'). It would have been obvious to combine the device of Wan and Van Delden with the trace of Busch because all are directed towards magnetic field measuring (Busch col 5, ln 62-67) and the trace of Busch provides the ability to correct bridge offset (Busch col 5, ln 62-67).

Regarding claim 4/3, the combination of Wan, Van Delden and Busch discloses the electronic magnetic field measuring device of claim 3, and Wan further discloses wherein: each of the first plurality of barber pole structures comprises a first permalloy portion (para [0018] 'permalloy thin films') and a plurality of shorting bars oriented at a first angle on the first permalloy portion (para [0018] 'barber poles'); and each of the second plurality of barber pole structures comprises a second permalloy portion, separate from the first permalloy portion (para [0018] 'permalloy thin films'), and a second plurality of shorting bars oriented at a second angle on the second permalloy portion (para [0018] 'barber poles'),
wherein each shorting bar of the first and second pluralities of shorting bars has a same first geometry (Fig 4, para [0039]) and
wherein the first geometry comprises a rectangle with a pair of alternate and opposite clipped comers (Fig 4, para [0039]).

Claims 1-7, 12-15, 17-18 and 21-23 have industrial applicability as defined by PCT Article 33(4) because the subject matter can be made or used in industry.

UNITED STATES PATENT AND TRADEMARK OFFICE

Commissioner for Patents
United States Patent and Trademark Office
P.O. Box 1450
Alexandria, VA 22313-1450
www.uspto.gov

William J. Wood
GATES & COOPER LLP
6701 Center Drive West
Suite 1050
Los Angeles, CA 90045

MAILED

APR 28 2011

PCT LEGAL ADMINISTRATION

In re Application of
THE REGENTS OF THE UNIVERSITY OF CALIFORNIA
PCT No.: PCT/US2011/026315
Int. Filing Date: 25 February 2011
Priority Date: 26 February 2010
Docket No.: 30435215WOU1
For: COMPOSITIONS AND METHODS FOR THE PRODUCTION OF L-HOMOALANINE

DECISION

This decision is in response to applicant's "Petition to Correct International Searching Authority" filed 30 March 2011. This is treated as a petition under 37 CFR 1.182.

BACKGROUND

On 25 February 2011, applicant electronically filed the above-identified international application with the RO/US. The International Searching Authority (ISA) selected in Box No. VII of the Request was the United States (ISA/US). The PCT Fee Calculation Sheet also indicated the United States Search fee of $2,080.00.

On 30 March 2011, applicant filed the subject petition requesting to change the choice of ISA to Korea (ISA/KR).

DISCUSSION

In the subject petition, applicant requests to change the ISA to Korea. The $400.00 petition fee has been paid.

As the PCT and PCT regulations do not specifically provide for a change in the ISA after the international application has been filed, such a request may only be considered upon a petition under 37 CFR 1.182. Moreover, such a petition will only be granted if the Search Copy has not yet been forwarded to the ISA/US.

A review of the international application shows that the Search Copy was transmitted to the ISA/US on 03 March 2011. The subject petition was not filed until 30 March 2011. As such, applicant's request to change the ISA cannot be granted.

DECISION

Applicant's petition under 37 CFR 1.182 is **DISMISSED**.

The ISA for the subject application remains the United States.

This application is being returned to the RO/US for further processing. A copy of this decision is being forwarded to the International Bureau.

James Thomson

James Thomson
Attorney Advisor
Office of PCT Legal Administration

Tel.: (571) 272-3302

cc: The International Bureau of WIPO
34, chemin des Colombettes
1211 Geneva 20
Switzerland

UNITED STATES PATENT AND TRADEMARK OFFICE

Commissioner for Patents
United States Patent and Trademark Office
P.O. Box 1450
Alexandria, VA 22313-1450
www.uspto.gov

EDWARD F. CAJA
ULMER & BERNER LLP
PATENT AGENT
1660 WEST 2ND STREET, SUITE 1100
CLEVELAND OH 44113

MAILED
JAN 06 2012
PCT LEGAL ADMINISTRATION

In re Application of	:	
BURNS, Kenneth, et al.	:	
PCT No.: PCT/US2011/029110	:	DECISION ON
Int. Filing Date: 19 March 2011	:	
Priority Date: 18 March 2010	:	PETITIONS
Docket No.: 32333-0020	:	
For: FREQUENCY SHIFT KEYING MODULATION AND DEMODULATION	:	UNDER 37 CFR 1.182 and 1.183

This decision is in response to applicants' Petition Under 37 CFR §§1.182 and 1.183 filed with the United States Receiving Office (RO/US) on 18 May 2011.

BACKGROUND

On 18 March 2011, applicants paid $30.

On 19 March 2011, applicants filed a Request form, fee calculation sheet, drawings, description and abstract using the USPTO EFS-Web system.

On 04 April 2011, RO/US mailed several papers including a Notification of the International Application Number and of the International Filing Date (Form PCT/DO/EO/105) indicating that the application had an international filing date of 19 March 2011and a priority date of 18 March 2010.

On 18 May 2011, applicants submitted the subject petitions under 37 CFR §§1.182 and 1.183 for the RO/US to accord this international application an international filing date of 18 March 2011. This petition was accompanied by, *inter alia*, a $400.00 petition fee, substitute sheets of Request, and a Request to Restore Right of Priority.

DISCUSSION

Applicants request that the international filing date be amended to 18 March 2011 pursuant to 37 CFR 1.182, or alternatively under 37 CFR 1.183.

It is first noted that when acting as the receiving Office, the USPTO is bound by the provisions of the Patent Cooperation Treaty and Regulations and Title 35 and is not authorized to waive any of them. See 35 USC 364. To the extent that applicants seek to waive or suspend the rules, that authority applies only to U.S. regulations. See 37 CFR 1.183.

Applicants state that this petition is filed under 37 CFR §§1.182 and 1.183 because the circumstances are either not provided for or to waive the requirement that the documents filed using the electronic filing system (EFS-Web) be submitted by pressing the "submit" button.

The requirements for establishing a date of receipt using the USPTO EFS-Web are clear. To be accorded a receipt date, applicants must comply with the filing requirements.[1] The MPEP states: "the EFS-Web system records as the date of receipt of documents the local date in the Eastern Standard Time on which the USPTO received the documents, after the user clicks the SUBMIT button on the Confirm and Submit screen for those documents." See MPEP 502.05.

Applicants first allege that the Office was in possession of the documents ahead of applicant pressing the "submit" button. That is not the case. The Office is not in permanent receipt of any documents until the "submit" button is pressed. The documents remain in control of the filer, who can add and remove documents. Prior to pressing the "submit" button, documents receive a cursory review of the system to assure that they can be read by the system. Those files are not retained by the system and are not part of the image file wrapper. The regulation is clear that nothing is retained until applicant presses the "submit" button.

Alternatively, applicants maintain that the interests of justice require waiver of the requirement to click the "submit" button. The Office is not persuaded. Applicants claim that they attempted to file prior to 11:59:59 PM, but provide no details of how long their purported difficulties delayed them. The failure to allocate sufficient time to file documents with EFS-Web, including to address any routine difficulties in filing does not create an event unforeseen in regulations and does not require a waiver of the regulation.

Applicants also assert that prior to submitting their filing to the Office via EFS-Web, they encountered difficulties validating their submission. The error message indicated that there were non-embedded fonts. USPTO requires that all fonts in a PDF must be embedded in the document so that the Office can see the document as it was intended by the author. See PDF Creation for EFS-Web.[2] Applicants claim that "the validation step failed to approve the three (3) USPTO-supplied fillable PDF forms." Applicants further assert that the three forms, Form PCT/RO/101, Form PCT/RO/101 (Annex) and PTO-1382 were supplied by USPTO and contained non-embedded fonts. Form PCT/RO/101 and Form PCT/RO/101 (Annex) were not downloaded from the USPTO website and were not created by USPTO. When one clicks the link on the USPTO page to download those forms, the user is directed to a screen that tells the user that they are leaving the USPTO page and being directed to a World Intellectual Property Office (WIPO) web page.

Further, the screen shots of the documents clearly list "WIPO" as the author. As such, those forms are supplied by WIPO. It is further noted that regardless of errors applicants may have encountered in uploading the Request form, Fee annex and transmittal letter, those items were not necessary to establish an international filing date. See PCT Article 11(1). PCT Article 11 requires that "the receiving Office shall accord as the international filing date the date of receipt of the international application."[3] Accordingly, any errors in the forms do not warrant a waiver of the filing

---

1 Under 37 CFR 1.6(a) *Date of receipt and Express Mail date of deposit.* Correspondence received in the Patent and Trademark Office is stamped with the date of receipt except as follows: ...

> (4) Correspondence may be submitted using the Office electronic filing system only in accordance with the Office electronic filing system requirements. Correspondence submitted to the Office by way of the Office electronic filing system will be accorded a receipt date, which is the date the correspondence is received at the correspondence address for the Office set forth in §1.1 when it was officially submitted.

2 "PDF Creation for EFS-Web," http://www.uspto.gov/ebc/portal/efs/pdf-creation.pdf

3 PCT Article 11(1)The receiving Office shall accord as the international filing date the date of receipt of the international application, provided that the Office has found that, at the time of receipt:

> (i) the applicant does not obviously lack, for reasons of residence or nationality, the right to file an international application with the receiving Office,
> (ii) the international application is in the prescribed language,

regulation. Further, the issue of non-embedded fonts is well-known to users of EFS-Web and the matter was quickly resolved by applicants. The issue was the applicants' failure to allocate sufficient time for their filing.

Finally, applicants have not established that the Office was in receipt of the international application on 18 March 2011. According to USPTO records, the drawings, description, claims, abstract and fee sheet were supplied at 00:02:13 on 19 March 2011 and the transmittal letter, request form and fee annex were received at 00:59:34 on 19 March 2011. Regulations are clear that the USPTO is in receipt of electronically filed documents when the "submit" button is pressed. Applicants have not established that the interests of justice require a waiver of the electronic filing regulations.

CONCLUSION

For the reasons discussed above, applicants' petitions under 37 CFR §§1.182 and 1.183 are **DISMISSED** without prejudice.

Any further correspondence with respect to this matter may be filed electronically via EFS-Web selecting the document description "Petition for review and processing by the PCT Legal Office," or by mail addressed to Mail Stop PCT, Commissioner for Patents, Office of PCT Legal Administration, P.O. Box 1450, Alexandria, Virginia 22313-1450, with the contents of the letter marked to the attention of the Office of PCT Legal Administration.

/Erin P. Thomson/

Erin P. Thomson
Attorney Advisor
PCT Legal Administration

Telephone: 571-272-3292

/Charles Pearson/

Charles Pearson
Director
PCT Legal Administration

(iii) the international application contains at least the following elements:
- (a) an indication that it is intended as an international application,
- (b) the designation of at least one Contracting State,
- (c) the name of the applicant, as prescribed,
- (d) a part which on the face of it appears to be a description,
- (e) a part which on the face of it appears to be a claim or claims...

UNITED STATES PATENT AND TRADEMARK OFFICE

Commissioner for Patents
United States Patent and Trademark Office
P.O. Box 1450
Alexandria, VA 22313-1450
www.uspto.gov

Mailed: 17 August 2011

In re application of	:	
Bing L. Wong et al.	:	DECISION ON
International Application No: PCT/US11/32594	:	PETITION
Filed: 15 April 2011	:	
For: A METHOD FOR THE PREPARATION OF A HIGH-TEMPERATURE STABLE OXYGEN-CARRIER-CONTAINING PHARMACEUTICAL COMPOSITION AND THE USE THEREOF	:	

This is a decision on the PETITION UNDER 37 CFR 1.181 which requests (A) withdrawal of the International Search Report/Opinion mailed on 27 June 2011 and (B) the issuance of a new ISR/Opinion consistent with the prior allowance of the identical claims in priority application 13/083,639, now U.S. Patent No. 7,989,593.

DECISION

Regarding (A), there is no provision in the Patent Cooperation Treaty for withdrawing a transmitted International Search Report/Opinion. Additionally, arguments directed to the merits of the non-binding opinion set forth in a transmitted Written Opinion (ISA/237) will only be considered if they are timely submitted with or after the filing of a Demand. In the present application, no Demand has been filed. Thus, the arguments regarding the merits of the opinion set forth in the Written Opinion mailed on 27 June 2011 will not be considered. This part of the petition is **DENIED**.

Regarding (B), the request for issuance of a new ISR/Opinion is deemed to be moot in view of the supplemental ISR/Written Opinion that was mailed on 16 August 2011. This part of the petition is **DISMISSED-AS-MOOT**.

Blaine Copenheaver, Quality Assurance Specialist
Technology Center 1700
Chemical and Materials Engineering

MARGARET ALICE BURKE
ELLA CHEONG (HONG KONG) LIMITED
5001 HOPEWELL CENTER
183 QUEEN'S ROAD EAST
WAN CHAI HK HONG KONG

UNITED STATES PATENT AND TRADEMARK OFFICE

Commissioner for Patents
United States Patent and Trademark Office
P.O. Box 1450
Alexandria, VA 22313-1450
www.uspto.gov

DAVID RESNICK
NIXON PEABODY LLP
100 SUMMER STREET
BOSTON MA 02110

MAILED
MAR 09 2012
PCT LEGAL ADMINISTRATION

In re Application of :
ALNYLAM PHARMACEUTICALS, INC. :
PCT No.: PCT/US2011/038889 : DECISION
Int. Filing Date: 02 June 2011 :
Priority Date Claimed: 02 June 2010 :
Attorney Docket No.: 051058084001 :
For: COMPOSITIONS AND METHODS :
DIRECTED TO TREATING LIVER FIBROSIS :

This decision is in response to applicant's petition under 37 CFR 1.182 filed 01 August 2011.

BACKGROUND

On 02 June 2011, applicant submitted electronically via EFS-Web, *inter alia*, a PCT Request, a Fee Calculation Sheet authorizing any deficiencies in fees to be charged to Deposit Account 500850, a description, claims, abstract, and a Sequence Listing. The application papers were assigned international application number PCT/US2011/038889.

On 14 June 2011, the United States Receiving Office (RO/US) issued a NOTIFICATION OF THE INTERNATIONAL APPLICATION NUMBER AND OF THE INTERNATIONAL FILING DATE (Form PCT/RO/105) indicating the international filing date as 02 June 2011.

On 14 June 2011, the RO/US also issued a NOTIFICATION CONCERNING PAYMENT OF PRESCRIBED FEES (Form PCT/RO/102) indicating that the total fees payable of $15,916 had been paid.

On 01 August 2011, applicant filed the instant petition under 37 CFR 1.182.

DISCUSSION

The petition urges that the copy of the Sequence Listing was intended to be included for search purposes only and requests that the extra page fees charged for the Sequence Listing be refunded. The petition indicates that the .pdf copy of the Sequence Listing submitted on 02 June 2011 was submitted inadvertently and/or that the .pdf copy should have been listed as an

"Accompanying Document". The petition also notes that Box IX of the Request form did not list the pages of the Sequence Listing as part of the International Application nor did the Fee Calculation Sheet.

Applicant can have the filing of the sequence listing in the instant application treated as having been filed for search purposes only with a proper petition under 37 CFR 1.182. Such a petition must be accompanied by the requisite petition fee of $400 as well as a statement setting forth the circumstances whereby a filing of the Sequence Listing as part of the international application was indicated even though applicant intended to file the Sequence Listing for search purposes only. The petition fee has been paid. The petition sets forth that applicant intended to file the sequence listing for search purposes only and the circumstances whereby the mistake was made.

Additionally, the RO/US made an *ex officio* correction to Box IX of the PCT Request to indicate that the international application included 715 sheets of Sequence Listings. This *ex officio* correction is in accordance with paragraphs 222 and 223 of the PCT Receiving Office Guidelines.[1] The RO/US then charged $10,725 to Deposit Account 500850 for these extra sheets.

Paragraph 161 of the RO Guidelines states that "[i]n certain cases, the receiving Office may, instead of inviting the applicant to submit a correction of a formal defect in the international application, itself correct the defect. The applicant is then notified of the correction which will remain unless the applicant objects."

In accordance with applicant's objection filed 01 August 2011 to the *ex officio* correction, the sheets containing the Sequence Listing are not part of the international application and Deposit Account 500850 has been credited $10,725.

---

[1]Paragraphs 222 and 223 of the PCT Receiving Office Guidelines are reproduced here.

222. The receiving Office examines the check list in Box No. IX(f) of the request for reference to any nucleotide and/or amino acid sequence listings filed on paper and checks whether such sequence listings have been filed as part of the description (that is, as far as the sequence listing is concerned, not for the purposes of international search under Rule 13ter only). It also checks that the copy indicated in item 9, and the statement indicated in item 10, accompany the international application. It also checks that the type and number of physical data carriers on which the sequence listing is contained is as indicated in item 9. If there is any inconsistency, the check list may need to be corrected. . . . the receiving Office must also check the appropriate marking in the check list of the request. In addition, the receiving Office must check that the correct international filing fee has been paid (paragraph 242).

223. Sheets of a sequence listing included in the international application must be presented as a separate part ("sequence listing part of the description") and should preferably be sequentially numbered in a series separate from that used in numbering the sheets of the request (first series), the sheets of the description, claims and abstract (second series), and any sheets of drawings (third series) (Section 207 and paragraph 139). For the purposes of the check list in Box No. IX of the request form, the receiving Office checks whether the number of sheets of such sequence listing is indicated separately in the check list (Rule 3.3(a)(i)). If that number is not indicated, the receiving Office includes it ex officio (paragraphs 161 to 165).

The sheets of the .pdf copy of the Sequence Listing filed 02 June 2011 have been stamped "SEQUENCE LISTING NOT FORMING PART OF THE INTERNATIONAL APPLICATION". Also, page 9 of the PCT Request and the PCT Fee Calculation Sheet have been annotated by placing "X"s over the *ex officio* corrections to indicate that these corrections have been voided.

CONCLUSION

For the reasons set forth above, the petition under 37 CFR 1.182 is **GRANTED**.

A copy of this decision is being sent to the International Bureau (IB) of WIPO. If the IB determines that a correction to the published international application clarifying the status of the Sequence Listing is required, or that republication is necessary, the IB is requested to take such action.

/Daniel Stemmer/

Daniel Stemmer
Legal Examiner
PCT Legal Affairs
Office of Patent Cooperation Treaty
Legal Administration
Telephone: (571) 272-3301

CC: International Bureau of WIPO

UNITED STATES PATENT AND TRADEMARK OFFICE

Commissioner for Patents
United States Patent and Trademark Office
P.O. Box 1450
Alexandria, VA 22313-1450
www.uspto.gov

MAILED

NOV 21 2011

PCT LEGAL ADMINISTRATION

Donna T. WARD
DT WARD, P.C.
292 Main Street, Suite 2
Groton, Massachusetts 01450

In re Application of :
ALNYLAM PHARMACEUTICALS, INC. :
PCT No.: PCT/US11/40427 :
Int. Filing Date: 15 June 2011 : DECISION ON PETITION
Atty. Docket No.: 2002.1011PCT :
For: CHINESE HAMPSTER OVARY (CHO) : UNDER 37 CFR 1.181
CELL TRANSCRIPTOME, CORRESPONDING :
SIRNAS AND USES THEREOF :

This petition decision is in response to applicant's Response to Furnish Nucleotide and/or Amino Acid Sequence Listing and to Pay where Applicable, Late Furnishing Fee Pursuant to PCT Rule 13*ter*.1(a) to (d), filed 12 October 2011, which has been treated as a petition under 37 CFR 1.181.

BACKGROUND

On 15 June 2011, applicant filed international application PCT/US11/40427 in the receiving Office of the United States (RO/US). Box No. IX-6a of the Request indicated that 4 CDs of sequence listing were provided as part of the international application. In fact, the accompanying transmittal letter indicated that the sequence listing was contained on one CD and that 3 copies were provided.

On 27 September 2011, the ISA/US issued Form PCT/ISA/225, Invitation to Furnish Nucleotide and/or Amino Acid Sequence Listing and to Pay, Where Applicable, Late Furnishing Fee, which indicated in an attached Error Report that "All Sequence Listing file terminators must be "ASCII Carriage Return plus ASCII Line Feed" and that "The line terminators throughout this Sequence Listing file are a single ASCII Line Feed only...Please change the line terminators in this file to the correct "ASCII Carriage Return plus ASCII Line Feed."

On 11 October 2011, Applicant filed a "Response to Furnish Nucleotide and/or Amino Acid Sequence Listing and to Pay where Applicable, Late Furnishing Fee Pursuant to PCT Rule 13*ter*.1(a) to (d)," indicating that "It is evident that carriage returns, coded 015, and line feeds, coded 012, are both present" that "It is unclear why the Office is unable to view the CR and LF in the sequence listing...," and that "Applicants believe that no correction or re-submission is necessary."

DISCUSSION

The PCT/ISA/225 mailed on 27 September invited Applicant to provide a sequence listing in electronic form that complied with Annex C of the Administrative Instructions because the "line terminators...are a single ASCII Line Feed only" and that "the line terminators in this file" should be corrected to "ASCII Carriage Return plus ASCII Line Feed." In response, Applicant did not provide the required substitute sequence listing, but rather argued that the sequence listing was not defective.

Applicant acknowledges receipt of an e-mail on 04 October 2011 containing a screenshot of the sequence listing in the Office's electronic records, clearly indicating the lack of a carriage return. In response, Applicant reiterated that "both LF and CR are present." The Office then viewed the originally filed CD directly, rather than relying upon electronic records, which verified the presence of line feeds, but no carriage returns.

Because Applicant failed to provide a timely and proper reply to the PCT/ISA/225 mailed 27 September 2011, a search of the international application will carried out to the extent possible without a sequence listing.

CONCLUSION

For the reasons discussed above, the petition under 37 CFR 1.181 is **DISMISSED** without prejudice.

The application is being forwarded to the ISA/US for search of the international application to the extent that a meaningful search can be carried out without the sequence listing as per PCT Rule 13*ter*.1(d).

Please direct further correspondence with respect to this matter to Mail Stop PCT, Assistant Commissioner for Patents, Office of PCT Legal Administration, P.O. Box 1450, Alexandria, Virginia 22313-1450.

Susan C. Wolski
PCT Special Programs Examiner
Office PCT Legal Administration

(571) 272-3304
SCW:scw

Richard Cole
PCT Legal Examiner
Office PCT Legal Administration

cc: WIPO
ISA/US

UNITED STATES PATENT AND TRADEMARK OFFICE

Commissioner for Patents
United States Patent and Trademark Office
P.O. Box 1450
Alexandria, VA 22313-1450
www.uspto.gov

MAILED

NOV 21 2011

PCT LEGAL ADMINISTRATION

Donna T. WARD
DT WARD, P.C.
292 Main Street, Suite 2
Groton, Massachusetts 01450

In re Application of	:	
ALNYLAM PHARMACEUTICALS, INC.	:	
PCT No.: PCT/US11/40427	:	
Int. Filing Date: 15 June 2011	:	DECISION ON PETITION
Atty. Docket No.: 2002.1011PCT	:	
For: CHINESE HAMPSTER OVARY (CHO)	:	UNDER 37 CFR 1.182
CELL TRANSCRIPTOME, CORRESPONDING	:	
SIRNAS AND USES THEREOF	:	

This petition decision is in response to applicant's Petition under 37 CFR 1.182 "Requesting Table be Considered Part of the International Application" filed 16 September 2011.

BACKGROUND

On 15 June 2011, applicant filed international application PCT/US11/40427 in the receiving Office of the United States (RO/US). Box No. IX-19 of the Request indicated a lengthy table with a file name of CHO.15Jun2010.patent.masterTable.txt, as an Accompanying Item to the international application. A Compact Disc Transmittal Form was included in the EFS-Web submission, which indicated that the table was provided under PCT Administrative Instructions Part 8, and the Description of the international application indicated that the table was incorporated by reference in its entirety. In addition, 618 sheets in PDF format entitled "CHO.15jun2010.patent.masterTable" were provided with the document code SPEC.

On 16 September 2011, the RO/US issued a Notification which indicated that effective 01 July 2009, Part 8 and Annex C*bis* no longer form part of the PCT Administrative Instructions and consequently, sequence-related tables cannot be filed as a separate part of the description in text format. Therefore, Table 1 was not considered by the RO/US as part of the international application.

On 16 September 2011, Applicant filed a petition requesting that Table 1 be considered part of the international application.

DISCUSSION

The Notification mailed 16 September 2011 indicated that a request to consider Table 1 part of the international application should include:

1) the fee under 37 CFR 1.17(h),

2) an identical copy of the table in PDF format, numbered as part of the description (and any other original sheets that consequently require renumbering),

3) a statement that the table in PDF format is identical to the table in text format, and

4) the appropriate fee per sheet for each PDF sheet provided

As to item 1), Applicant's petition under 37 CFR 1.182 provides authorization to charge deposit account 50-5211 for the $400.00 fee under 37 CFR 1.17(h).

As to items 2) and 3), the petition points out that a PDF of Table 1 was submitted together with the international application on the international filing date. This table consists of sheets numbered 1 – 618, originally submitted with the document code SPEC (indicated as item 6 on the Electronic Acknowledgement Receipt dated 15 June 2011, document code subsequently changed to APPENDIX).

The petition also provides 1058 replacement sheets of Table 1 reformatted for tabulation and proper margins to comply with PCT Rule 11, together with a statement that the contents of these sheets are identical to the contents of Table 1 submitted in .txt format on CD-ROM with the international application. This statement has been construed as an indication that the content of the replacement sheets are identical to the content of the originally provided Table 1 in PDF format. If this is not the case, applicant is requested to contact the undersigned immediately.

As to item 4), the petition provides authorization to charge the deposit account for the additional fee per sheet of the PDF Table.

Therefore, the sheets of Table 1 originally provided on 15 June 2011 can and will be considered part of the international application. Because these original sheets do not comply with the requirements of PCT Rule 11, the proposed replacement sheets of Table 1 will be forwarded to the ISA/US for consideration as a request for Rectification of an Obvious Mistake.

CONCLUSION

For the reasons discussed above, the petition under 37 CFR 1.182 is **GRANTED**.

In accordance with this petition decision, PDF pages 1-618 of Table 1 provided on 15 June 2011 are considered by the RO/US as part of the international application.

The application is being forwarded to the ISA/US section of the Office of PCT Operations for consideration of Applicant's request to change the formatting of Table 1 to comply with PCT Rule 11, which will be treated as a for Rectification of an Obvious Mistake under PCT Rule 91.

Please direct further correspondence with respect to this matter to Mail Stop PCT, Assistant Commissioner for Patents, Office of PCT Legal Administration, P.O. Box 1450, Alexandria, Virginia 22313-1450.

Susan C. Wolski
PCT Special Programs Examiner
Office PCT Legal Administration

(571) 272-3304
SCW:scw

Richard Cole
PCT Legal Examiner
Office PCT Legal Administration

cc: WIPO
ISA/US

UNITED STATES PATENT AND TRADEMARK OFFICE

Commissioner for Patents
United States Patent and Trademark Office
P.O. Box 1450
Alexandria, VA 22313-1450
www.uspto.gov

Wilburn L. Chesser
ARENT FOX LLP
1050 Connecticut Avenue, N.W.
Suite 400
Washington, D.C. 20036-5339

MAILED

MAR 16 2012

PCT LEGAL ADMINISTRATION

In re Application of: ROAMWARE, INC.	:	PETITION
PCT Application No.: PCT/US2011/042967	:	
International Filing Date: 05 July 2011	:	
Priority Date: 02 July 2010	:	UNDER
Attorney's Docket No.: 028327-00422	:	
For: ADVANCED PREDICTIVE INTELLIGENCE FOR	:	
TERMINATION BYPASS DETECTION AND PREVENTION	:	37 CFR 1.181

This decision is in response to applicants' "REQUEST FOR CORRECTED FORMS PCT/ISA/220, PCT/ISA/210, AND PCT/ISA/237" filed 20 December 2010, which has been treated as a petition under 37 C.F.R. 1.181. No petition fee is required.

BACKGROUND

On 16 November 2011, the United States International Searching Authority (ISA/US) issued a Notification of Transmittal of the International Search Report and the Written Opinion of the International Searching Authority, or the Declaration (form PCT/ISA/220), International Search Report (form PCT/ISA/210), and Written Opinion of the International Searching Authority (form PCT/ISA/237).

On 20 December 2010, applicants filed the present petition requesting that the forms PCT/ISA/220, PCT/ISA/210, and PCT/ISA/237 be issued with the correct name of the applicant.

DISCUSSION

A review of the file reveals that the name of the applicant on the forms PCT/ISA/220, PCT/ISA/210, and PCT/ISA/237 was incorrectly indicated as "JAMES J. BINDSEILARENT FOX LLPSUITE 400WASHINGTON, DC 20036-5339"

CONCLUSION

For the reason given above, the applicants' petition under 37 CFR 1.181 is **GRANTED**.

Corrected Notification of Transmittal of the International Search Report and the Written Opinion of the International Searching Authority, or the Declaration (form PCT/ISA/220), International Search Report (form PCT/ISA/210), and Written Opinion of the International Searching Authority (form PCT/ISA/237) are attached to this decision. A copy of this decision is being forwarded to the IB.

Boris Milef
PCT Legal Examiner
Office of PCT Legal Administration

Harry C. Kim
PCT Special Programs Examiner
Office of PCT Legal Administration
Telephone: (571) 272-3285

ATTACHMENT: Corrected Notification of Transmittal of the International Search Report and the Written Opinion of the International Searching Authority, or the Declaration (form PCT/ISA/220), International Search Report (form PCT/ISA/210), and Written Opinion of the International Searching Authority (form PCT/ISA/237)

CORRECTED

PATENT COOPERATION TREATY

From the INTERNATIONAL SEARCHING AUTHORITY

To:
JAMES J. BINDSEIL
ARENT FOX LLP
SUITE 400
WASHINGTON, DC 20036-5339

PCT

NOTIFICATION OF TRANSMITTAL OF THE INTERNATIONAL SEARCH REPORT AND THE WRITTEN OPINION OF THE INTERNATIONAL SEARCHING AUTHORITY, OR THE DECLARATION

(PCT Rule 44.1)

Date of mailing *(day/month/year)*	16 MAR 2012
Applicant's or agent's file reference 028327-00422	**FOR FURTHER ACTION** See paragraphs 1 and 4 below
International application No. PCT/US 11/42967	International filing date *(day/month/year)* 05 July 2011 (05.07.2011)
Applicant ROAMWARE, INC.	

1. ☒ The applicant is hereby notified that the international search report and the written opinion of the International Searching Authority have been established and are transmitted herewith.

   Filing of amendments and statement under Article 19:
   The applicant is entitled, if he so wishes, to amend the claims of the international application (see Rule 46):

   When? The time limit for filing such amendments is normally two months from the date of transmittal of the international search report.

   Where? Directly to the International Bureau of WIPO, 34 chemin des Colombettes 1211 Geneva 20, Switzerland, Facsimile No.: +41 22 338 82 70

   For more detailed instructions, see *PCT Applicant's Guide*, International Phase, paragraphs 9.004 – 9.011.

2. ☐ The applicant is hereby notified that no international search report will be established and that the declaration under Article 17(2)(a) to that effect and the written opinion of the International Searching Authority are transmitted herewith.

3. ☐ **With regard to any protest** against payment of (an) additional fee(s) under Rule 40.2, the applicant is notified that:

   ☐ the protest together with the decision thereon has been transmitted to the International Bureau together with any request to forward the texts of both the protest and the decision thereon to the designated Offices.

   ☐ no decision has been made yet on the protest; the applicant will be notified as soon as a decision is made.

4. **Reminders**

   The applicant may submit comments on an informal basis on the written opinion of the International Searching Authority to the International Bureau. The International Bureau will send a copy of such comments to all designated Offices unless an international preliminary examination report has been or is to be established. Following the expiration of 30 months from the priority date, these comments will also be made available to the public.

   Shortly after the expiration of **18 months** from the priority date, the international application will be published by the International Bureau. If the applicant wishes to avoid or postpone publication, a notice of withdrawal of the international application, or of the priority claim, must reach the International Bureau before the completion of the technical preparations for international publication (Rules 90*bis*.1 and 90*bis*.3).

   Within **19 months** from the priority date, but only in respect of some designated Offices, a demand for international preliminary examination must be filed if the applicant wishes to postpone the entry into the national phase **until 30 months** from the priority date (in some Offices even later); otherwise, the applicant must, **within 20 months** from the priority date, perform the prescribed acts for entry into the national phase before those designated Offices.

   In respect of other designated Offices, the time limit of **30 months** (or later) will apply even if no demand is filed within 19 months.

   For details about the applicable time limits, Office by Office, see www.wipo.int/pct/en/texts/time_limits.html and the *PCT Applicant's Guide*, National Chapters.

Name and mailing address of the ISA/ Mail Stop PCT, Attn: ISA/US Commissioner for Patents P.O. Box 1450, Alexandria, Virginia 22313-1450 Facsimile No. 571-273-3201	Authorized officer Lee W. Young PCT Helpdesk: 571-272-4300 Telephone No. PCT OSP: 571-272-7774

Form PCT/ISA/220 (July 2010)

CORRECTED

PATENT COOPERATION TREATY

PCT

INTERNATIONAL SEARCH REPORT

(PCT Article 18 and Rules 43 and 44)

Applicant's or agent's file reference 028327-00422	FOR FURTHER ACTION	see Form PCT/ISA/220 as well as, where applicable, item 5 below.
International application No. PCT/US 11/42967	International filing date *(day/month/year)* 05 July 2011 (05.07.2011)	(Earliest) Priority Date *(day/month/year)* 02 July 2010 (02.07.2010)
Applicant ROAMWARE, INC.		

This international search report has been prepared by this International Searching Authority and is transmitted to the applicant according to Article 18. A copy is being transmitted to the International Bureau.

This international search report consists of a total of 2 sheets.

☐ It is also accompanied by a copy of each prior art document cited in this report.

1. **Basis of the report**

   a. With regard to the **language**, the international search was carried out on the basis of:

   ☒ the international application in the language in which it was filed.

   ☐ a translation of the international application into _____ which is the language of a translation furnished for the purposes of international search (Rules 12.3(a) and 23.1(b)).

   b. ☐ This international search report has been established taking into account the **rectification of an obvious mistake** authorized by or notified to this Authority under Rule 91 (Rule 43.6*bis*(a)).

   c. ☐ With regard to any **nucleotide and/or amino acid sequence** disclosed in the international application, see Box No. I.

2. ☐ **Certain claims were found unsearchable** (see Box No. II).

3. ☐ **Unity of invention is lacking** (see Box No. III).

4. With regard to the **title**,

   ☒ the text is approved as submitted by the applicant.

   ☐ the text has been established by this Authority to read as follows:

5. With regard to the **abstract**,

   ☒ the text is approved as submitted by the applicant.

   ☐ the text has been established, according to Rule 38.2, by this Authority as it appears in Box No. IV. The applicant may, within one month from the date of mailing of this international search report, submit comments to this Authority.

6. With regard to the **drawings**,

   a. the figure of the **drawings** to be published with the abstract is Figure No. 1

   ☐ as suggested by the applicant.

   ☒ as selected by this Authority, because the applicant failed to suggest a figure.

   ☐ as selected by this Authority, because this figure better characterizes the invention.

   b. ☐ none of the figures is to be published with the abstract.

INTERNATIONAL SEARCH REPORT

International application No.
PCT/US 11/42967

A. CLASSIFICATION OF SUBJECT MATTER
IPC(8) - H04M 1/66 (2011.01)
USPC - 455/410
According to International Patent Classification (IPC) or to both national classification and IPC

B. FIELDS SEARCHED

Minimum documentation searched (classification system followed by classification symbols)
USPC: 455/410

Documentation searched other than minimum documentation to the extent that such documents are included in the fields searched
USPC: 455/403, 410 (keyword limited - see terms below)

Electronic data base consulted during the international search (name of data base and, where practicable, search terms used)
PubWEST(USPT,PGPB,EPAB,JPAB); Google
Search Terms: bypass, fraud, call, forwarding, test, monitor, analyze, examine, caller, id, identification

C. DOCUMENTS CONSIDERED TO BE RELEVANT

Category*	Citation of document, with indication, where appropriate, of the relevant passages	Relevant to claim No.
Y	US 2002/0015485 A1 (Bhusri) 07 February 2002 (07.02.2002), para [0030], [0034], [0036], [0040], [0041], [0055], [0077], [0080], [0088], [0091]	1 - 42
Y	US 2009/0061860 A1 (Jiang) 05 March 2009 (05.03.2009), [0078], [0094], [0103], [0230], [0233], [0279] [0285]	1 - 42
A	US 2009/0069047 A1 (Russell et al.) 12 March 2009 (12.03.2009), entire document	1 - 42

☐ Further documents are listed in the continuation of Box C. ☐

* Special categories of cited documents:
"A" document defining the general state of the art which is not considered to be of particular relevance
"E" earlier application or patent but published on or after the international filing date
"L" document which may throw doubts on priority claim(s) or which is cited to establish the publication date of another citation or other special reason (as specified)
"O" document referring to an oral disclosure, use, exhibition or other means
"P" document published prior to the international filing date but later than the priority date claimed
"T" later document published after the international filing date or priority date and not in conflict with the application but cited to understand the principle or theory underlying the invention
"X" document of particular relevance; the claimed invention cannot be considered novel or cannot be considered to involve an inventive step when the document is taken alone
"Y" document of particular relevance; the claimed invention cannot be considered to involve an inventive step when the document is combined with one or more other such documents, such combination being obvious to a person skilled in the art
"&" document member of the same patent family

Date of the actual completion of the international search	Date of mailing of the international search report
08 November 2011 (08.11.2011)	16 MAR 2012
Name and mailing address of the ISA/US Mail Stop PCT, Attn: ISA/US, Commissioner for Patents P.O. Box 1450, Alexandria, Virginia 22313-1450 Facsimile No. 571-273-3201	Authorized officer: Lee W. Young PCT Helpdesk: 571-272-4300 PCT OSP: 571-272-7774

Form PCT/ISA/210 (second sheet) (July 2009)

CORRECTED

PATENT COOPERATION TREATY

From the
INTERNATIONAL SEARCHING AUTHORITY

To: JAMES J. BINDSEIL
ARENT FOX LLP
SUITE 400
WASHINGTON, DC 20036-5339

PCT

WRITTEN OPINION OF THE
INTERNATIONAL SEARCHING AUTHORITY

(PCT Rule 43*bis*.1)

Date of mailing *(day/month/year)*	16 MAR 2012
Applicant's or agent's file reference 028327-00422	**FOR FURTHER ACTION** See paragraph 2 below

International application No.	International filing date *(day/month/year)*	Priority date *(day/month/year)*
PCT/US 11/42967	05 July 2011 (05.07.2011)	02 July 2010 (02.07.2010)

International Patent Classification (IPC) or both national classification and IPC
IPC(8) - H04M 1/66 (2011.01)
USPC - 455/410

Applicant ROAMWARE, INC.

1. This opinion contains indications relating to the following items:

- [X] Box No. I Basis of the opinion
- [ ] Box No. II Priority
- [ ] Box No. III Non-establishment of opinion with regard to novelty, inventive step and industrial applicability
- [ ] Box No. IV Lack of unity of invention
- [X] Box No. V Reasoned statement under Rule 43*bis*.1(a)(i) with regard to novelty, inventive step or industrial applicability; citations and explanations supporting such statement
- [ ] Box No. VI Certain documents cited
- [ ] Box No. VII Certain defects in the international application
- [ ] Box No. VIII Certain observations on the international application

2. **FURTHER ACTION**

If a demand for international preliminary examination is made, this opinion will be considered to be a written opinion of the International Preliminary Examining Authority ("IPEA") except that this does not apply where the applicant chooses an Authority other than this one to be the IPEA and the chosen IPEA has notified the International Bureau under Rule 66.1 *bis*(b) that written opinions of this International Searching Authority will not be so considered.

If this opinion is, as provided above, considered to be a written opinion of the IPEA, the applicant is invited to submit to the IPEA a written reply together, where appropriate, with amendments, before the expiration of 3 months from the date of mailing of Form PCT/ISA/220 or before the expiration of 22 months from the priority date, whichever expires later.

For further options, see Form PCT/ISA/220.

Name and mailing address of the ISA/US	Date of completion of this opinion	Authorized officer:
Mail Stop PCT, Attn: ISA/US Commissioner for Patents P.O. Box 1450, Alexandria, Virginia 22313-1450 Facsimile No. 571-273-3201	08 November 2011 (08.11.2011)	Lee W. Young PCT Helpdesk: 571-272-4300 PCT OSP: 571-272-7774

WRITTEN OPINION OF THE INTERNATIONAL SEARCHING AUTHORITY

International application No.
PCT/US 11/42967

Box No. I Basis of this opinion

1. With regard to the **language**, this opinion has been established on the basis of:

   ☒ the international application in the language in which it was filed.

   ☐ a translation of the international application into _____ which is the language of a translation furnished for the purposes of international search (Rules 12.3(a) and 23.1(b)).

2. ☐ This opinion has been established taking into account the **rectification of an obvious mistake** authorized by or notified to this Authority under Rule 91 (Rule 43*bis*.1(a))

3. With regard to any **nucleotide and/or amino acid sequence** disclosed in the international application, this opinion has been established on the basis of a sequence listing filed or furnished:

   a. (means)

   ☐ on paper

   ☐ in electronic form

   b. (time)

   ☐ in the international application as filed

   ☐ together with the international application in electronic form

   ☐ subsequently to this Authority for the purposes of search

4. ☐ In addition, in the case that more than one version or copy of a sequence listing has been filed or furnished, the required statements that the information in the subsequent or additional copies is identical to that in the application as filed or does not go beyond the application as filed, as appropriate, were furnished.

5. Additional comments:

WRITTEN OPINION OF THE INTERNATIONAL SEARCHING AUTHORITY

International application No.
PCT/US 11/42967

Box No. V **Reasoned statement under Rule 43*bis*.1(a)(i) with regard to novelty, inventive step or industrial applicability; citations and explanations supporting such statement**

1. Statement

Novelty (N)	Claims	1- 42	YES
	Claims	None.	NO
Inventive step (IS)	Claims	None.	YES
	Claims	1 - 42	NO
Industrial applicability (IA)	Claims	1 - 42	YES
	Claims	None.	NO

2. Citations and explanations:

Claims 1 - 42 lack an inventive step under PCT Article 33(3) as being obvious over US 2002/0015485 A1 (Bhusri), in view of US 2009/0061860 A1 (Jiang).

As per claim 1, Bhusri discloses a method for detecting bypass fraud in a telecommunication network, the method comprising: generating one or more test calls from a remote agent to a local agent, wherein the local agent is a subscriber number of a subscriber; facilitating call forwarding of the test calls from the local agent to a local number (para [0036]). Bhusri does not explicitly disclose identifying a presence of bypass fraud by analyzing caller identification information of the test call received on the local number. However, Jiang discloses identifying a presence of bypass fraud by analyzing caller identification information of the test call received on the local number (para [0230] and [0233]). It would have been obvious to one of ordinary skill in the art to provide a method for detecting bypass fraud as taught by Bhusri and analyze caller information as taught by Jiang because it would enable a system to reduce the number of unauthorized users and provide additional system resources.

As per claim 2, Jiang discloses the test calls from the remote agent are triggered by a Predictive Intelligence (PI) gateway (para [0078]).

As per claim 3, Jiang discloses the subscriber is selected based on predefined logic (para [0285]).

As per claim 4, Jiang discloses the subscriber number is selected from a pool of subscriber numbers as a local agent (para [0107]).

As per claim 5, Jiang discloses the call forwarding from the local agent to the local number is facilitated by setting unconditional calls forwarding in a profile of the subscriber to the local number (para [0094], [0103] and [0279]).

As per claim 6, Jiang discloses the remote agent is a roaming agent created in a roaming partner network of the network the subscriber numbers belong to, wherein the roaming agent has a conditional call for forwarding profile set to the local agent (para [0103] and [0279]).

As per claim 7, Jiang discloses a current unconditional call forwarding profile of the subscriber is stored before facilitating call forwarding from the local agent to the local number (para [0279]).

As per claim 8, Jiang discloses restoring the stored unconditional call forwarding profile of the subscriber after the test call is completed (para [0279]).

As per claim 9, Jiang discloses the bypass detected is one of an on-net and off-net GSM SIM box (para [0230]).

As per claim 10, Jiang discloses the bypass detected is a termination bypass (para [0064]).

As per claim 11, Jiang discloses the bypass detected is a fixed line termination bypass (para [0225]).

As per claim 12, Jiang discloses the bypass detected is a CDMA termination bypass (para [0230] and [0290]).

As per claim 13, Jiang discloses the subscriber number is provisioned with T-CSI in its HLR to pass the termination call control to PI (para [0078] and [0123]).

As per claim 14, Jiang discloses the subscriber number has unconditional call forwarding set towards the local number in its HLR (para [0107]).

As per claim 15, Jiang discloses the local number is selected from a pool of pre-defined numbers (para [0107]).

As per claim 16, Bhusri discloses the one or more test calls are made using randomized call parameters [different test-call prefixes] (para [0091]).

---(Please See Supplemental Box)---

WRITTEN OPINION OF THE
INTERNATIONAL SEARCHING AUTHORITY

International application No.
PCT/US 11/42967

Supplemental Box

In case the space in any of the preceding boxes is not sufficient.
Continuation of:

Box No. V 2. Citations and explanations:

As per claim 17, Bhusri discloses the call parameters are randomized using one or more of: a calling party in test calls with no CLI; a calling party in test calls with real subscriber number; a calling party in test calls with any number; test calls from random number from roaming partner country range; test calls from corrupted numbers; and an origin of release of the test call (para [0091]).

As per claim 18, Jiang discloses the GSM SIM box presence is detected by tracking call ID while terminating the test calls to the local number (para [0220]).

As per claim 19, Jiang discloses the GSM SIM box presence is suspected when an originating caller ID in the test calls generated to the roaming agent is different from the caller ID in the test calls terminating to the local number (para [0220]).

As per claim 20, Jiang discloses the caller ID of the test call is tracked by provisioning T-CSI in the local number's profile (para [0233]).

As per claim 21, Jiang discloses releasing the test calls upon detecting of the GSM SIM box (para [0141]).

As per claim 22, Jiang discloses the test calls are released immediately after detection of the GSM SIM box (para [0141]).

As per claim 23, Bhusri discloses the test calls are released after a configurable time period (para [0088]).

As per claim 24, Jiang discloses answering the test calls to identify the GSM SIM box (para [0218] and [0269]).

As per claim 25, Bhusri discloses the test calls are answered for a pre-defined time period (para [0077]).

As per claim 26, Jiang discloses a cost of the test calls in monitored to determine the pre-defined time period for answering the test calls (para [0007]).

As per claim 27, Jiang discloses deactivating the on-net GSM SIM box by barring all calls to VLR where the GSM SIM box is being latched (para [0222]).

As per claim 28, neither Jiang nor Bhusri explicitly disclose disabling the on-net SIM box based on remaining credit in the prepaid account. However, it would have been obvious to one of ordinary skill in the art to disable based on remaining credit of a prepaid account because it would prevent the unauthorized user from continuing to use a service based on the remaining credit.

As per claim 29, Jiang discloses the GSM SIM box is an on-net GSM SIM box, and wherein a profile of the on-net GSM SIM box is suspended or disabled (para [0222]).

As per claim 30, Bhusri discloses monitoring a usage, a location and a movement of the on-net GSM SIM box (para [0080]).

As per claim 31, Bhusri discloses storing the off-net SIM box in a database and using the database to release any off-net calls from off networks with caller ID from the database of of-net GSM SIM boxes (para [0030]).

As per claim 32, neither Jiang nor Bhusri explicitly disclose the GSM SIM box is an off-net GSM SIM box, where the test number is quarantined for a time based on logic each time the test call involving the test number discovered a GSM SIM box. However, it would have been obvious to one of ordinary skill in the art to disable a test number because it would prevent an unauthorized user from continuing to use a service through the test number.

As per claim 33, Jiang discloses the remote agent is a dialer using one of a group consisting of VoIP carriers, wholesale carriers and calling cards (para [0080]).

As per claim 34, Jiang discloses a cost of the test call is metered to control the cost of early answer fraud (para [0159]).

As per claim 35, Bhusri discloses a system for preventing termination bypass fraud in mobile communication, the system comprising: a gateway that causes one or more test calls from a remote agent to a local agent (para [0034], [0041] and [0086]); wherein the gateway facilitates call forwarding of the test calls from the local agent to a local number (para [0036]). Bhusri does not explicitly disclose wherein the gateway identifies presence of termination bypass fraud by analyzing termination of the test calls to the local number. However, Jiang discloses the gateway identifies presence of termination bypass fraud by analyzing termination of the test calls to the local number (para [0202] and [0216]). It would have been obvious to one of ordinary skill in the art to provide a system for detecting bypass fraud as taught by Bhusri and analyze caller information as taught by Jiang because it would enable a system to reduce the number of unauthorized users and provide additional system resources.

As per claim 36, Jiang discloses the gateway is a termination bypass detection module (para [0064] and [0080]).

As per claim 37, Jiang discloses the local agent is a subscriber (para [0107]).

As per claim 38, Bhusri discloses the gateway uses signaling to generate the test call from the remote agent to the local agent (para [0040] and [0055]).

---(continued on next page)---

WRITTEN OPINION OF THE
INTERNATIONAL SEARCHING AUTHORITY

International application No.
PCT/US 11/42967

Supplemental Box

In case **the space in any of the preceding boxes is not sufficient.**
Continuation of:

Box No. V 2. Citations and explanations:

As per claim 39, Jiang discloses the gateway releases the test calls upon detection of the termination bypass (para [0141]).

As per claim 40, Jiang discloses the gateway releases the test calls immediately after detecting of the termination bypass (para [0141]).

As per claim 41, Bhusri discloses the gateway releases the test calls after a configurable time period (para [0088]).

As per claim 42, Jiang discloses the gateway answers the test calls to identify a SIM box (para [0218] and [0269]).

Claims 1-42 have industrial applicability as defined by PCT Article 33(4) because the subject matter can be made or used in industry.

UNITED STATES PATENT AND TRADEMARK OFFICE

Commissioner for Patents
United States Patent and Trademark Office
P.O. Box 1450
Alexandria, VA 22313-1450
www.uspto.gov

Mark A. Catan
MILES & STOCKBRIDGE P.C.
1751 Pinnacle Drive, Suite 500
McClean, VA 22102-3833

MAILED

MAR 05 2012

PCT LEGAL ADMINISTRATION

In re Application of :
THE TRUSTEES OF COLUMBIA :
UNIVERSITY IN THE CITY OF NEW YORK :
PCT No.: PCT/US2011/046865 :
Int. Filing Date: 05 August 2011 :
Priority Date: 06 August 2010 :
Attorney Docket No.: T4356-17926WO01 :
For: MEDICAL IMAGING CONTRAST :
DEVICES, METHODS, AND SYSTEMS

DECISION

This decision is in response to applicant's "Letter to Resubmit Response to Invitation to Correct Defects" filed with the United States Receiving Office (RO/US) on 09 January 2012 which is treated under 37 CFR 1.181. No fee is required.

BACKGROUND

On 05 August 2011, applicant filed the above-identified international application claiming priority to two U.S. provisional applications, the earliest filed 06 August 2011.

On 26 August 2011, the RO/US mailed an Invitation to Correct Defects in the International Application (Form PCT/RO/106).

On 12 September 2011, applicant filed a response to the Form PCT/RO/106 which included a substitute Request (PCT/RO/101) consisting of six sheets; however, only two sheets were uploaded into the application.

On 09 January 2012, applicant filed the subject petition which was accompanied by, *inter alia*, a copy of the documents filed 12 September 2011 along with the Electronic Acknowledgement receipt for those documents.

DISCUSSION

Applicant states that they filed seven sheets on 12 September 2011 but that "only two pages of the replacement Request (PCT/RO/101) were uploaded."

A review of the subject application shows that all seven sheets originally filed with the RO/US using the USPTO EFS-Web system have been placed in the application with a receipt date of 12 September 2011.

Accordingly, a copy of the priority documents (U.S. provisional application No. 61/371,982 filed 09 August 2010 and U.S. provisional application No. 61/371,647 filed 06 August 2011) will be forwarded to the International Bureau as requested.

No further action on the petition is required.

CONCLUSION

Applicant's petition under 37 CFR 1.181 is hereby **DISMISSED** as **MOOT**.

This application is being forwarded to the RO/US for further processing in accordance with this decision.

A copy of this decision will be sent to the International Bureau.

James Thomson
Attorney Advisor
Office of PCT Legal Administration

Tel.: (571) 272-3302

cc: The International Bureau of WIPO
34, chemin des Colombettes
1211 Geneva 20
Switzerland

UNITED STATES PATENT AND TRADEMARK OFFICE

Commissioner for Patents
United States Patent and Trademark Office
P.O. Box 1450
Alexandria, VA 22313-1450
www.uspto.gov

MICHAEL KELLER
ROETZEL & ANDRESS
350 EAST LAS OLAS BOULEVARD
LAS OLAS CENTRE II, SUITE 1150, P.O. BOX 30310
FT. LAUDERDALE FL FLORIDA 33303

MAILED
NOV 01 2011
PCT LEGAL ADMINISTRATION

In re Application of:
DYADIC INTERNATIONAL, INC.
PCT No.: PCT/US2011/047734
International Filing Date: 15 August 2011
Priority Date Claimed: 13 August 2010
Attorney's Docket No.: 1247020240
For: NOVEL FUNGAL ENZYMES

DECISION ON PETITION UNDER 37 CFR 1.182

This decision is issued in response to the "Petition And Response To Notice Concerning Payment Of Prescribed Fees" filed on 26 September 2011, considered herein as a petition under 37 CFR 1.182. Applicant has paid the required petition fee.

BACKGROUND

On 15 August 2011, applicant filed materials to initiate the present international application including, among other materials, a Request (Form PCT/RO/101), a description (122 pages), claims (15 page), abstract (1 page), drawings (1 page), sequence listing in txt file format, sequence listing in PDF format (421 pages), and $5,191 in fees.

On 26 August 2011, the United States Receiving Office (RO/US) mailed, among other materials, a "Notification Of The International Application Number And Of The International Filing Date" (Form PCT/RO/105) identifying the international filing date as 15 August 2011, a "Notification Concerning Payment Of Prescribed Fees" (Form PCT/RO/102) indicating that an additional $6,315 in fees were required, and a "Notification Regarding Certain Corrections Made *Ex Officio*" (Form PCT/RO/146) indicating that the Box No. IX of the PCT Request had been corrected with respect to the number of pages included in the application.

On 26 September 2011, applicant filed the "Petition And Response To Notice Concerning Payment" considered herein, accompanied by payment of the additional required fees.[1]

DISCUSSION

As indicated above, applicants' original international application submission included, among other materials, 421 pages of sequence listing submitted as a PDF file. The inclusion of

[1] It is noted that applicants' submission included $7,157 in additional filing fees; however, only $6,315 in additional fees were required. A refund of the excess fee payment was subsequently credited to applicants' Deposit Account.

these pages in the international application as filed resulted in the total number of pages contained in the application increasing from 144 (as listed in the originally filed Request) to 565, leading to the increase in the required supplemental filing fee.

Applicants' present petition was accompanied by payment of the fee required for the additional pages of sequence listing, but the petition argues that the PDF version of the sequence listing was filed inadvertently and should not be considered as part of the international application. However, the information provided on the USPTO website regarding the filing via EFS-Web of a sequence listing in an international application expressly advises applicants of the consequences of submitting a PDF copy of the sequence listing, stating as follows:[2]

> When a sequence listing is filed in both a PDF file and an ASCII text file, the PDF copy of the sequence listing will be considered to form part of the application and the ASCII text file will be used for search purposes and will be transmitted to the International Bureau with the record copy. The pages of the PDF file that contain the sequence listing will be taken into account when calculating the application page count, i.e., excess page fees may be required for the PDF file.

Here, as set forth above, applicants included the PDF version of the sequence listing with the international application materials filed on the international filing date. Thus, regardless of whether the filing of such pages was inadvertent, the PDF version of the sequence listing is "considered to form part of the application" and such pages are appropriately "taken into account when calculating the application page count." Applicants' petition to disregard the PDF version of the sequence listing and refund the additional filing fees applicable to such pages is therefore appropriately dismissed.

CONCLUSION

For the reasons set forth above, applicant's petition under 37 CFR 1.182 to disregard the PDF version of the sequence listing filed on the international filing date and for a refund of the supplemental filing fees attributable to the inclusion of these pages in the international application is **DISMISSED** without prejudice.

The application will be referred to the RO/US for further processing in accordance with this decision.

/RichardMRoss/

Richard M. Ross
Attorney Advisor
Office of PCT Legal Administration
Telephone: (571) 272-3296

[2] EFS-Web Legal Framework, section J3.

UNITED STATES PATENT AND TRADEMARK OFFICE

Commissioner for Patents
United States Patent and Trademark Office
P.O. Box 1450
Alexandria, VA 22313-1450
www.uspto.gov

MAILED

FEB 06 2012

PCT LEGAL ADMINISTRATION

STEPHEN A. BURCH
CARLSON, GASKEY & OLDS, PC
400 W. MAPLE ROAD, SUITE 350
BIRMINGHAM MI MICHIGAN 48009

In re Application of
HAMILTON SUNDSTRAND CORP.
PCT No.: PCT/US11/48013
Int. Filing Date: 17 August 2011
Priority Date: 19 August 2010
Attorney Docket No.: 67036-351PCT
For: ACTIVE FILTERING ELECTRICAL ACCUMULATOR UNIT

: DECISION ON REQUEST
: TO WITHDRAW THE
: INTERNATIONAL APPLICATION

This is a decision on applicant's request to withdraw international application PCT/US11/48013. The request was filed 14 December 2011and refiled on 10 January 2012 with the United States Receiving Office (RO/US) in the above referenced application.

BACKGROUND

On 17 August 2011, applicant submitted a PCT Request along a fee calculation sheet, description and claims. The application was assigned application number PCT/US11/48013. The Request was not signed by applicant/inventors but was signed by Stephan A. Burch as named agent. Fees were paid in this application.

On 14 December 2011, a request for withdrawal of PCT Application PCT/US11/48013 pursuant to PCT Rule 90*bis*.1 was filed in the United States Receiving Office.

DISCUSSION

With regard to the request to withdraw application PCT/US11/48013, applicant may withdraw the international application by a notice addressed to the International Bureau or to the Receiving Office. *See* PCT Rule 90*bis*.1. However, the notice must be signed by all the applicants. *See* PCT Rule 90*bis*.5. Or the notice may be signed by the agent appointed by all applicants to represent them before the Receiving Office or International Bureau.[1] Here, all

[1] Where an Office or Authority has waived the requirement that a separate power of attorney, or a copy of a general power of attorney, has to be furnished, the waiver does not apply in respect of any notice of withdrawal. Where one of the applicants is considered the common representative under Rule 90.2(b), the notice of withdrawal

applicants did not sign the request to withdraw PCT/US11/48013. A Power of attorney was submitted which was executed by the joint applicant/inventors. However, the agent did not sign the withdrawal request. The request to withdraw PCT/US11/48013 is signed only by Linda Paprotna Cunha, identified as Assistant Secretary, with no identification of the corporation she is representing. The request to withdraw the application was not signed by all the applicants or their the attorney of record. Where there is no Power of Attorney[2] on behalf of all applicants, all of the applicants are required to sign the withdrawal of international application PCT/US11/48013.

Pursuant to PCT Rule 90bis.5, without the signatures of applicant/inventors, the withdrawal of the international application no. PCT/US11/24513 is **REFUSED** because the request to withdraw is not signed by all of the applicants as required.

To withdraw the international application, a new request executed by all the applicants or by a person(s) authorized to act on behalf of the applicants is necessary.

DECISION

As construed above, the petition to withdraw the international application PCT/US11/48013 is **DISMISSED WITHOUT PREJUDICE**.

/Cynthia M. Kratz/
Cynthia M. Kratz
Attorney Advisor
PCT Legal Office
Office of PCT Legal Administration

Telephone: (571) 272-3286
Facsimile: (571) 273-0459

must be signed by all the applicants.

[2] A Power of Attorney by the corporate applicant appointing Carlson, Gaskey & Olds P.C. and its attorneys as the agent on behalf of all the applicants was not submitted, in compliance with PCT Rule 90.1.

UNITED STATES PATENT AND TRADEMARK OFFICE

Commissioner for Patents
United States Patent and Trademark Office
P.O. Box 1450
Alexandria, VA 22313-1450
www.uspto.gov

ROBERT J. CRAWFORD
CRAWFORD MAUNU PLLC
1150 NORTHLAND DRIVE, STE 100
ST. PAUL MN MINNESOTA 55120

MAILED

JAN 17 2012

PCT LEGAL ADMINISTRATION

In re Application of
BOARD OF TRUSTEES OF LELAND. . . . . :
PCT No.: PCT/US2011/059272 :
Int. Filing Date: 04 November 2011 :
Priority Date: 04 November 2010 : DECISION ON PETITION
Attorney Docket No.: SAR100081099 :
For: LIGHT-ACTIVATED CHIMERIC :
OPSINS AND METHODS OF USING :
THE SAME

This decision is issued in response to applicant's "Request for PCT Refund" filed 16 December 2011.

BACKGROUND

On 04 November 2011, applicant submitted electronically via the EFS-Web System a PCT application which included: 7 page Request (PCT/RO/101); 53 pages of descriptions; 6 pages of claims; 1 page abstract; 4 pages of sequence listings and 6 pages of drawings. The submission included a transmittal letter to the Receiving Office which authorized the Office to charge applicant's Deposit Account the required fees for the above-identified application. These papers were assigned application number PCT/US2010/059272.

On 14 November 2011, the Receiving Office/United States mailed Notification of Concerning Prescribed Fees (Form PCT/RO/102) and Notification of the International Application Number and of the International Filing Date (Form PCT/RO/105).

On 02 December 2011, the International Searching Authority/United States mailed Invitation to Furnish Nucleotide and/or Amino Acid Sequence Listing and to Pay, Where Applicable, Late Furnishing Fee (Form PCT/ISA/225).

On 16 December 2011, applicant filed the present request for refund.

DISCUSSION

Applicant states in the present request that "Deposit Account 50-0996 was erroneously charged duplicate filing fees totaling $4,886.00 on 11/18/11. . . a PCT application was initiated on 11/04/2011 but the Private PAIR system crashed before the application was fully uploaded and no payment was authorized. Therefore, in abundance

of caution, the PCT application was re-filed on 11/4/2011 and received serial no. PCT/US11/59276." It is noted that no further information has been provided regarding the "system crash" which occurred on 04 November 2011.

Applicant requests to obtain a refund of the amount charged to applicant's deposit account. However, applicant has not specifically requested the withdrawal of the international application pursuant to PCT Rule 90bis.1. PCT Rule 90bis.1 permits the applicant to withdraw an international application at any time before the expiration of thirty months from the priority date.

Because the application has not been effectively withdrawn, granting of applicant's request for refund of the application fees is not appropriate. It is noted that PCT Rule 15.6 and 16.2 set forth the conditions under which a refund of the international filing fee and/or the search fee is permitted. As discussed in such rules, if the application is effectively withdrawn prior to the transmittal of the record copy to the International Bureau (IB) (for the international filing fee) and the search copy to the International Searching Authority (ISA) (for the search fee), a refund of these fees is appropriate. It is noted that the transmittal of the record copy and/or the search copy has occurred. At the present time, however, where the application has not been effectively withdrawn, a refund of such fees is not appropriate.

CONCLUSION

For the reasons discussed above, the request for refund is REFUSED.

The present international application remains active.

Any further correspondence with respect to this matter may be filed electronically via EFS-Web selecting the document description "Petition for review and processing by the PCT Legal Office" or by mail addressed to Mail Stop PCT, Commissioner for Patents, Office of PCT Legal Administration, P.O. Box 1450, Alexandria, Virginia 22313-1450, with the contents of the letter marked to the attention of the Office of PCT Legal Administration.

Anthony Smith
Attorney-Advisor
Office of PCT Legal Administration
Tel.: (571) 272-3298
Fax: (571) 273-0459

UNITED STATES PATENT AND TRADEMARK OFFICE

Commissioner for Patents
United States Patent and Trademark Office
P.O. Box 1450
Alexandria, VA 22313-1450
www.uspto.gov

Ralph J. Crispino
ABELMAN, FRAYNE & SCHWAB
666 Third Avenue, 10th Floor
New York, NY 10017

MAILED

MAR 09 2012

PCT LEGAL ADMINISTRATION

In re Application of :
SAUDI ARABIAN OIL COMPANY :
PCT No.: PCT/US2011/064825 :
Int. Filing Date: 14 December 2011 :
Priority Date: 15 December 2010 : **DECISION**
Attorney's Docket No.: 211,687 PCT :
For: DESULFURIZATION OF :
HYDROCARBON FEED USING :
GASEOUS OXIDANT :

This decision is in response to applicant's request for refund of the handling fee inadvertently paid on 14 December 2011.

Applicant's request for refund is **GRANTED** as follows:

Applicant submitted a $264.00 handling fee (Fee Code 1705) during the initial filing of the above-identified international application on 14 December 2011 along with the required transmittal fee, search and examination fee.

A handling fee is due only upon submission of a demand in an international application. *See* PCT Rule 57.1.

In this case, no demand was submitted. Accordingly refund of this fee is appropriate.

The $264.00 handling fee will be credited back to Deposit Account No. 01-0035.

James Thomson
Attorney Advisor
Office of PCT Legal Administration

Tel.: (571) 272-3302